C8051F388/9/A/B

Flash MCU Family

Analog Peripherals
- **10-Bit ADC**
  - Up to 500 ksps
  - Built-in analog multiplexer with single-ended and differential mode
  - VREF from external pin, internal reference, or V_{DD}
  - Built-in temperature sensor
  - External conversion start input option
- **Two comparators**
- **Internal voltage reference**
- **Brown-out detector and POR Circuitry**

On-Chip Debug
- On-chip debug circuitry facilitates full speed, non-intrusive in-system debug (No emulator required)
- Provides breakpoints, single stepping, inspect/modify memory and registers
- Superior performance to emulation systems using ICE-chips, target pods, and sockets

Voltage Supply Input: 2.7 to 5.25 V
- Voltages from 2.7 to 5.25 V supported using On-Chip Voltage Regulators

High Speed 8051 µC Core
- Pipelined instruction architecture; executes 70% of instructions in 1 or 2 system clocks
- Up to 48 MIPS operation
- Expanded interrupt handler

Memory
- 4352 or 2304 Bytes RAM
- 64 or 32 kB Flash; In-system programmable in 512-byte sectors

Digital Peripherals
- 40/25 Port I/O; All 5 V tolerant with high sink current
- Hardware enhanced SPI™, two I^2C/SMBus™, and two enhanced UART serial ports
- Six general purpose 16-bit counter/timers
- 16-bit programmable counter array (PCA) with five capture/compare modules
- External Memory Interface (EMIF)

Clock Sources
- Internal Oscillator: ±1.5% accuracy. Supports all UART modes
- External Oscillator: Crystal, RC, C, or clock (1 or 2 Pin modes)
- Low Frequency (80 kHz) Internal Oscillator
- Can switch between clock sources on-the-fly

Packages
- 48-pin TQFP (C8051F388/A)
- 32-pin LQFP (C8051F389/B)
- 5x5 mm 32-pin QFN (C8051F389/B)

Temperature Range: –40 to +85 °C

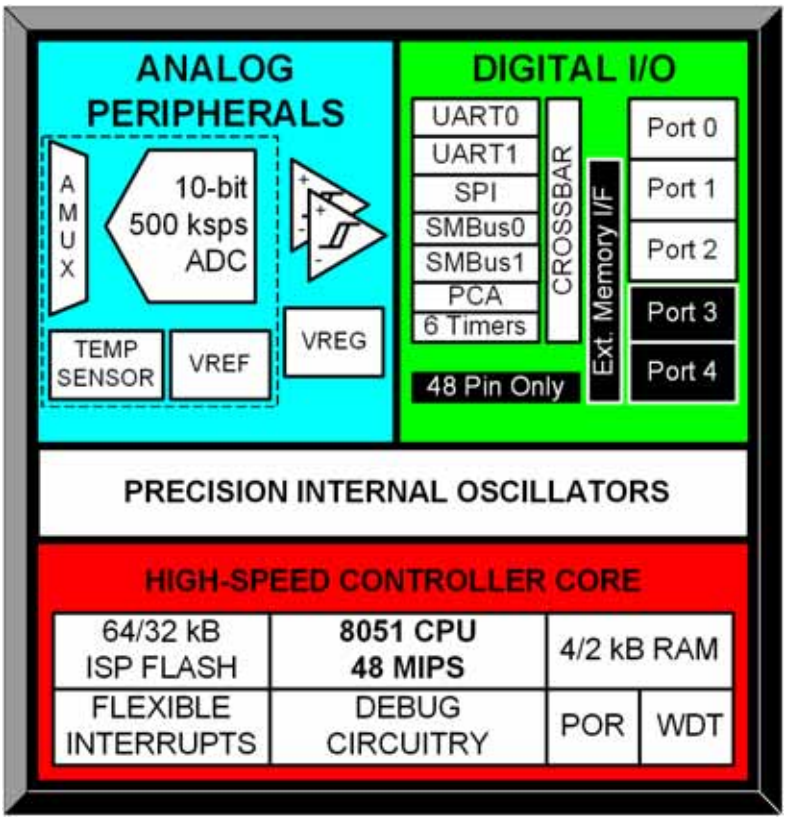

Copyright © 2015 by Silicon Laboratories

Table of Contents

1. System Overview 15
2. C8051F34x Compatibility 19
2.1. Hardware Incompatibilities 20
3. Pinout and Package Definitions 21
4. Typical Connection Diagrams 33
4.1. Power 33
5. Electrical Characteristics 34
5.1. Absolute Maximum Specifications 34
5.2. Electrical Characteristics 35
6. 10-Bit ADC 42
6.1. Output Code Formatting 43
6.3. Modes of Operation 46
6.3.1. Starting a Conversion 46
6.3.2. Tracking Modes 47
6.3.3. Settling Time Requirements 48
6.4. Programmable Window Detector 52
6.4.1. Window Detector Example 54
6.5. ADC0 Analog Multiplexer 55
7. Voltage Reference Options 58
8. Comparator0 and Comparator1 60
8.1. Comparator Multiplexers 67
9. Voltage Regulators (REG0 and REG1) 70
9.1. Voltage Regulator (REG0) 70
9.1.1. Regulator Mode Selection 70
9.1.2. External Interrupt 2 (INT2) 70
9.2. Voltage Regulator (REG1) 70
10. Power Management Modes 72
10.1. Idle Mode 72
10.2. Stop Mode 73
10.3. Suspend Mode 73
11. CIP-51 Microcontroller 75
11.1. Instruction Set 76
11.1.1. Instruction and CPU Timing 76
11.2. CIP-51 Register Descriptions 81
12. Prefetch Engine 84
13. Memory Organization 85
13.1. Program Memory 86
13.2. Data Memory 86
13.3. General Purpose Registers 87
13.4. Bit Addressable Locations 87
13.5. Stack 87
14. External Data Memory Interface and On-Chip XRAM 88
14.1. Accessing XRAM 88

14.1.1. 16-Bit MOVX Example 88
14.1.2. 8-Bit MOVX Example 88
14.2. Configuring the External Memory Interface 89
14.3. Port Configuration 89
14.4. Multiplexed and Non-multiplexed Selection 92
14.4.1. Multiplexed Configuration 92
14.4.2. Non-multiplexed Configuration 93
14.5. Memory Mode Selection 94
14.5.1. Internal XRAM Only 94
14.5.2. Split Mode without Bank Select 94
14.5.3. Split Mode with Bank Select 95
14.5.4. External Only 95
14.6. Timing 96
14.6.1. Non-multiplexed Mode 98
14.6.1.1. 16-bit MOVX: EMI0CF[4:2] = 101, 110, or 111 98
14.6.1.2. 8-bit MOVX without Bank Select: EMI0CF[4:2] = 101 or 111 99
14.6.1.3. 8-bit MOVX with Bank Select: EMI0CF[4:2] = 110 100
14.6.2. Multiplexed Mode 101
14.6.2.1. 16-bit MOVX: EMI0CF[4:2] = 001, 010, or 011 101
14.6.2.2. 8-bit MOVX without Bank Select: EMI0CF[4:2] = 001 or 011 102
14.6.2.3. 8-bit MOVX with Bank Select: EMI0CF[4:2] = 010 103
15. Special Function Registers 105
15.1. SFR Paging 105
16. Interrupts 112
16.1. MCU Interrupt Sources and Vectors 113
16.1.1. Interrupt Priorities 113
16.1.2. Interrupt Latency 113
16.2. Interrupt Register Descriptions 113
16.3. INT0 and INT1 External Interrupt Sources 121
17. Reset Sources 123
17.1. Power-On Reset 124
17.2. Power-Fail Reset / VDD Monitor 125
17.3. External Reset 126
17.4. Missing Clock Detector Reset 126
17.5. Comparator0 Reset 126
17.6. PCA Watchdog Timer Reset 127
17.7. Flash Error Reset 127
17.8. Software Reset 127
18. Flash Memory 129
18.1. Programming The Flash Memory 129
18.1.1. Flash Lock and Key Functions 129
18.1.2. Flash Erase Procedure 129
18.1.3. Flash Write Procedure 130
18.2. Non-Volatile Data Storage 131
18.3. Security Options 131

19. Oscillators and Clock Selection 136
19.1. System Clock Selection 137
19.2. Programmable Internal High-Frequency (H-F) Oscillator 139
19.2.1. Internal Oscillator Suspend Mode 139
19.3. Clock Multiplier 141
19.4. Programmable Internal Low-Frequency (L-F) Oscillator 142
19.4.1. Calibrating the Internal L-F Oscillator 142
19.5. External Oscillator Drive Circuit 143
19.5.1. External Crystal Mode 143
19.5.2. External RC Example 145
19.5.3. External Capacitor Example 145
20. Port Input/Output 147
20.1. Priority Crossbar Decoder 148
20.2. Port I/O Initialization 152
20.3. General Purpose Port I/O 155
21. SMBus0 and SMBus1 (I2C Compatible) 166
21.1. Supporting Documents 167
21.2. SMBus Configuration 167
21.3. SMBus Operation 167
21.3.1. Transmitter Vs. Receiver 168
21.3.2. Arbitration 168
21.3.3. Clock Low Extension 168
21.3.4. SCL Low Timeout 168
21.3.5. SCL High (SMBus Free) Timeout 169
21.4. Using the SMBus 169
21.4.1. SMBus Configuration Register 169
21.4.2. SMBus Timing Control Register 171
21.4.3. SMBnCN Control Register 175
21.4.3.1. Software ACK Generation 175
21.4.3.2. Hardware ACK Generation 175
21.4.4. Hardware Slave Address Recognition 178
21.4.5. Data Register 182
21.5. SMBus Transfer Modes 184
21.5.1. Write Sequence (Master) 184
21.5.2. Read Sequence (Master) 185
21.5.3. Write Sequence (Slave) 186
21.5.4. Read Sequence (Slave) 187
21.6. SMBus Status Decoding 187
22. UART0 193
22.1. Enhanced Baud Rate Generation 194
22.2. Operational Modes 195
22.2.1. 8-Bit UART 195
22.2.2. 9-Bit UART 196
22.3. Multiprocessor Communications 197
23. UART1 201

23.1. Baud Rate Generator 202
23.2. Data Format..... 203
23.3. Configuration and Operation 204
23.3.1. Data Transmission 204
23.3.2. Data Reception 204
23.3.3. Multiprocessor Communications 205
24. Enhanced Serial Peripheral Interface (SPI0) 211
24.1. Signal Descriptions..... 212
24.1.1. Master Out, Slave In (MOSI)..... 212
24.1.2. Master In, Slave Out (MISO)..... 212
24.1.3. Serial Clock (SCK) 212
24.1.4. Slave Select (NSS) 212
24.2. SPI0 Master Mode Operation 212
24.3. SPI0 Slave Mode Operation 214
24.4. SPI0 Interrupt Sources 215
24.5. Serial Clock Phase and Polarity 215
24.6. SPI Special Function Registers 217
25. Timers 224
25.1. Timer 0 and Timer 1 227
25.1.1. Mode 0: 13-bit Counter/Timer 227
25.1.2. Mode 1: 16-bit Counter/Timer 228
25.1.3. Mode 2: 8-bit Counter/Timer with Auto-Reload..... 228
25.1.4. Mode 3: Two 8-bit Counter/Timers (Timer 0 Only)..... 229
25.2. Timer 2 235
25.2.1. 16-bit Timer with Auto-Reload..... 235
25.2.2. 8-bit Timers with Auto-Reload..... 236
25.2.3. Timer 2 Capture Modes: LFO Falling Edge 236
25.3. Timer 3 242
25.3.1. 16-bit Timer with Auto-Reload..... 242
25.3.2. 8-bit Timers with Auto-Reload..... 243
25.3.3. Timer 3 Capture Modes: LFO Falling Edge 243
25.4. Timer 4 249
25.4.1. 16-bit Timer with Auto-Reload..... 249
25.4.2. 8-bit Timers with Auto-Reload..... 250
25.5. Timer 5 254
25.5.1. 16-bit Timer with Auto-Reload..... 254
25.5.2. 8-bit Timers with Auto-Reload..... 255
26. Programmable Counter Array..... 259
26.1. PCA Counter/Timer 260
26.2. PCA0 Interrupt Sources..... 261
26.3. Capture/Compare Modules 262
26.3.1. Edge-triggered Capture Mode..... 263
26.3.2. Software Timer (Compare) Mode..... 264
26.3.3. High-Speed Output Mode 265
26.3.4. Frequency Output Mode 266

26.3.5. 8-bit Pulse Width Modulator Mode 267
26.3.6. 16-Bit Pulse Width Modulator Mode 268
26.4. Watchdog Timer Mode 269
26.4.1. Watchdog Timer Operation 269
26.4.2. Watchdog Timer Usage 270
26.5. Register Descriptions for PCA0 272
27. C2 Interface 277
27.1. C2 Interface Registers 277
27.2. C2 Pin Sharing 280
28. Revision Specific Behavior 281
28.1. Revision Identification 281
28.2. INT2 Pin Not Connected 283
Document Change List 284
Contact Information 285

List of Figures

Figure 1.1. C8051F388/A Block Diagram 17
Figure 1.2. C8051F389/B Block Diagram 18
Figure 3.1. TQFP-48 (C8051F388/A) Pinout Diagram (Top View) 24
Figure 3.2. TQFP-48 Package Diagram 25
Figure 3.3. TQFP-48 Recommended PCB Land Pattern 26
Figure 3.4. LQFP-32 (C8051F389/B) Pinout Diagram (Top View) 27
Figure 3.5. LQFP-32 Package Diagram 28
Figure 3.6. LQFP-32 Recommended PCB Land Pattern 29
Figure 3.7. QFN-32 (C8051F389/B) Pinout Diagram (Top View) 30
Figure 3.8. QFN-32 Package Drawing 31
Figure 3.9. QFN-32 Recommended PCB Land Pattern 32
Figure 4.1. Connection Diagram with Voltage Regulator Used 33
Figure 4.2. Connection Diagram with Voltage Regulator Not Used 33
Figure 6.1. ADC0 Functional Block Diagram 42
Figure 6.2. Typical Temperature Sensor Transfer Function 44
Figure 6.3. Temperature Sensor Error with 1-Point Calibration 45
Figure 6.4. 10-Bit ADC Track and Conversion Example Timing 47
Figure 6.5. ADC0 Equivalent Input Circuits 48
Figure 6.6. ADC Window Compare Example: Right-Justified Data 54
Figure 6.7. ADC Window Compare Example: Left-Justified Data 54
Figure 7.1. Voltage Reference Functional Block Diagram 58
Figure 8.1. Comparator0 Functional Block Diagram 60
Figure 8.2. Comparator1 Functional Block Diagram 61
Figure 8.3. Comparator Hysteresis Plot 62
Figure 8.4. Comparator Input Multiplexer Block Diagram 67
Figure 11.1. CIP-51 Block Diagram 75
Figure 13.1. On-Chip Memory Map for 64 kB Devices (C8051F388/9) 85
Figure 13.2. On-Chip Memory Map for 32 kB Devices (C8051F38A/B) 86
Figure 14.1. Multiplexed Configuration Example 92
Figure 14.2. Non-multiplexed Configuration Example 93
Figure 14.3. EMIF Operating Modes 94
Figure 14.4. Non-Multiplexed 16-bit MOVX Timing 98
Figure 14.5. Non-Multiplexed 8-bit MOVX without Bank Select Timing 99
Figure 14.6. Non-Multiplexed 8-bit MOVX with Bank Select Timing 100
Figure 14.7. Multiplexed 16-bit MOVX Timing 101
Figure 14.8. Multiplexed 8-bit MOVX without Bank Select Timing 102
Figure 14.9. Multiplexed 8-bit MOVX with Bank Select Timing 103
Figure 17.1. Reset Sources 123
Figure 17.2. Power-On and VDD Monitor Reset Timing 124
Figure 18.1. Flash Program Memory Map and Security Byte 131
Figure 19.1. Oscillator Options 136
Figure 19.2. External Crystal Example 144
Figure 20.1. Port I/O Functional Block Diagram (Port 0 through Port 3) 147

Figure 20.2. Port I/O Cell Block Diagram 148
Figure 20.3. Peripheral Availability on Port I/O Pins 149
Figure 20.4. Crossbar Priority Decoder in Example Configuration (No Pins Skipped) 150
Figure 20.5. Crossbar Priority Decoder in Example Configuration (3 Pins Skipped) 151
Figure 21.1. SMBus Block Diagram 166
Figure 21.2. Typical SMBus Configuration 167
Figure 21.3. SMBus Transaction 168
Figure 21.4. Typical SMBus SCL Generation 170
Figure 21.5. Typical Master Write Sequence 184
Figure 21.6. Typical Master Read Sequence 185
Figure 21.7. Typical Slave Write Sequence 186
Figure 21.8. Typical Slave Read Sequence 187
Figure 22.1. UART0 Block Diagram 193
Figure 22.2. UART0 Baud Rate Logic 194
Figure 22.3. UART Interconnect Diagram 195
Figure 22.4. 8-Bit UART Timing Diagram 195
Figure 22.5. 9-Bit UART Timing Diagram 196
Figure 22.6. UART Multi-Processor Mode Interconnect Diagram 197
Figure 23.1. UART1 Block Diagram 201
Figure 23.2. UART1 Timing Without Parity or Extra Bit 203
Figure 23.3. UART1 Timing With Parity 203
Figure 23.4. UART1 Timing With Extra Bit 203
Figure 23.5. Typical UART Interconnect Diagram 204
Figure 23.6. UART Multi-Processor Mode Interconnect Diagram 205
Figure 24.1. SPI Block Diagram 211
Figure 24.2. Multiple-Master Mode Connection Diagram 213
Figure 24.3. 3-Wire Single Master and 3-Wire Single Slave Mode Connection Diagram 213
Figure 24.4. 4-Wire Single Master Mode and 4-Wire Slave Mode Connection Diagram 214
Figure 24.5. Master Mode Data/Clock Timing 216
Figure 24.6. Slave Mode Data/Clock Timing (CKPHA = 0) 216
Figure 24.7. Slave Mode Data/Clock Timing (CKPHA = 1) 217
Figure 24.8. SPI Master Timing (CKPHA = 0) 221
Figure 24.9. SPI Master Timing (CKPHA = 1) 221
Figure 24.10. SPI Slave Timing (CKPHA = 0) 222
Figure 24.11. SPI Slave Timing (CKPHA = 1) 222
Figure 25.1. T0 Mode 0 Block Diagram 228
Figure 25.2. T0 Mode 2 Block Diagram 229
Figure 25.3. T0 Mode 3 Block Diagram 230
Figure 25.4. Timer 2 16-Bit Mode Block Diagram 235
Figure 25.5. Timer 2 8-Bit Mode Block Diagram 236
Figure 25.6. Timer 2 Capture Mode (T2SPLIT = 0) 237

Figure 25.7. Timer 2 Capture Mode (T2SPLIT = 0) 238
Figure 25.8. Timer 3 16-Bit Mode Block Diagram 242
Figure 25.9. Timer 3 8-Bit Mode Block Diagram 243
Figure 25.10. Timer 3 Capture Mode (T3SPLIT = 0) 244
Figure 25.11. Timer 3 Capture Mode (T3SPLIT = 0) 245
Figure 25.12. Timer 4 16-Bit Mode Block Diagram 249
Figure 25.13. Timer 4 8-Bit Mode Block Diagram 250
Figure 25.14. Timer 5 16-Bit Mode Block Diagram 254
Figure 25.15. Timer 5 8-Bit Mode Block Diagram 255
Figure 26.1. PCA Block Diagram 259
Figure 26.2. PCA Counter/Timer Block Diagram 260
Figure 26.3. PCA Interrupt Block Diagram 261
Figure 26.4. PCA Capture Mode Diagram 263
Figure 26.5. PCA Software Timer Mode Diagram 264
Figure 26.6. PCA High-Speed Output Mode Diagram 265
Figure 26.7. PCA Frequency Output Mode 266
Figure 26.8. PCA 8-Bit PWM Mode Diagram 267
Figure 26.9. PCA 16-Bit PWM Mode 268
Figure 26.10. PCA Module 4 with Watchdog Timer Enabled 269
Figure 27.1. Typical C2 Pin Sharing 280

List of Tables

Table 1.1. Product Selection Guide 16
Table 2.1. C8051F388/9/A/B Replacement Part Numbers 19
Table 3.1. Pin Definitions for the C8051F388/9/A/B 21
Table 3.2. TQFP-48 Package Dimensions 25
Table 3.3. TQFP-48 PCB Land Pattern Dimensions 26
Table 3.4. LQFP-32 Package Dimensions 28
Table 3.5. LQFP-32 PCB Land Pattern Dimensions 29
Table 3.6. QFN-32 Package Dimensions 31
Table 3.7. QFN-32 PCB Land Pattern Dimensions 32
Table 5.1. Absolute Maximum Ratings 34
Table 5.2. Global Electrical Characteristics 35
Table 5.3. Port I/O DC Electrical Characteristics 36
Table 5.4. Reset Electrical Characteristics 36
Table 5.5. Internal Voltage Regulator Electrical Characteristics 37
Table 5.6. Flash Electrical Characteristics 37
Table 5.7. Internal High-Frequency Oscillator Electrical Characteristics 38
Table 5.8. Internal Low-Frequency Oscillator Electrical Characteristics 38
Table 5.9. External Oscillator Electrical Characteristics 38
Table 5.10. ADC0 Electrical Characteristics 39
Table 5.11. Temperature Sensor Electrical Characteristics 40
Table 5.12. Voltage Reference Electrical Characteristics 40
Table 5.13. Comparator Electrical Characteristics 41
Table 11.1. CIP-51 Instruction Set Summary 77
Table 14.1. AC Parameters for External Memory Interface 104
Table 15.1. Special Function Register (SFR) Memory Map 106
Table 15.2. Special Function Registers 107
Table 16.1. Interrupt Summary 114
Table 21.1. SMBus Clock Source Selection 170
Table 21.2. Minimum SDA Setup and Hold Times 171
Table 21.3. Sources for Hardware Changes to SMBnCN 178
Table 21.4. Hardware Address Recognition Examples (EHACK = 1) 179
Table 21.5. SMBus Status Decoding: Hardware ACK Disabled (EHACK = 0) 188
Table 21.6. SMBus Status Decoding: Hardware ACK Enabled (EHACK = 1) 190
Table 22.1. Timer Settings for Standard Baud Rates Using Internal Oscillator 199
Table 23.1. Baud Rate Generator Settings for Standard Baud Rates 202
Table 24.1. SPI Slave Timing Parameters 223
Table 26.1. PCA Timebase Input Options 260
Table 26.2. PCA0CPM Bit Settings for PCA Capture/Compare Modules 262
Table 26.3. Watchdog Timer Timeout Intervals1 271

List of Registers

SFR Definition 6.1. ADC0CF: ADC0 Configuration 49
SFR Definition 6.2. ADC0H: ADC0 Data Word MSB 50
SFR Definition 6.3. ADC0L: ADC0 Data Word LSB 50
SFR Definition 6.4. ADC0CN: ADC0 Control 51
SFR Definition 6.5. ADC0GTH: ADC0 Greater-Than Data High Byte 52
SFR Definition 6.6. ADC0GTL: ADC0 Greater-Than Data Low Byte 52
SFR Definition 6.7. ADC0LTH: ADC0 Less-Than Data High Byte 53
SFR Definition 6.8. ADC0LTL: ADC0 Less-Than Data Low Byte 53
SFR Definition 6.9. AMX0P: AMUX0 Positive Channel Select 56
SFR Definition 6.10. AMX0N: AMUX0 Negative Channel Select 57
SFR Definition 7.1. REF0CN: Reference Control 59
SFR Definition 8.1. CPT0CN: Comparator0 Control 63
SFR Definition 8.2. CPT0MD: Comparator0 Mode Selection 64
SFR Definition 8.3. CPT1CN: Comparator1 Control 65
SFR Definition 8.4. CPT1MD: Comparator1 Mode Selection 66
SFR Definition 8.5. CPT0MX: Comparator0 MUX Selection 68
SFR Definition 8.6. CPT1MX: Comparator1 MUX Selection 69
SFR Definition 9.1. REG01CN: Voltage Regulator Control 71
SFR Definition 10.1. PCON: Power Control 74
SFR Definition 11.1. DPL: Data Pointer Low Byte 81
SFR Definition 11.2. DPH: Data Pointer High Byte 81
SFR Definition 11.3. SP: Stack Pointer 82
SFR Definition 11.4. ACC: Accumulator 82
SFR Definition 11.5. B: B Register 82
SFR Definition 11.6. PSW: Program Status Word 83
SFR Definition 12.1. PFE0CN: Prefetch Engine Control 84
SFR Definition 14.1. EMI0CN: External Memory Interface Control 90
SFR Definition 14.2. EMI0CF: External Memory Interface Configuration 91
SFR Definition 14.3. EMI0TC: External Memory Timing Control 97
SFR Definition 15.1. SFRPAGE: SFR Page 105
SFR Definition 16.1. IE: Interrupt Enable 115
SFR Definition 16.2. IP: Interrupt Priority 116
SFR Definition 16.3. EIE1: Extended Interrupt Enable 1 117
SFR Definition 16.4. EIP1: Extended Interrupt Priority 1 118
SFR Definition 16.5. EIE2: Extended Interrupt Enable 2 119
SFR Definition 16.6. EIP2: Extended Interrupt Priority 2 120
SFR Definition 16.7. IT01CF: INT0/INT1 ConfigurationO 122
SFR Definition 17.1. VDM0CN: VDD Monitor Control 126
SFR Definition 17.2. RSTSRC: Reset Source 128
SFR Definition 18.1. PSCTL: Program Store R/W Control 133
SFR Definition 18.2. FLKEY: Flash Lock and Key 134
SFR Definition 18.3. FLSCL: Flash Scale 135
SFR Definition 19.1. CLKSEL: Clock Select 138

SFR Definition 19.2. OSCICL: Internal H-F Oscillator Calibration 139
SFR Definition 19.3. OSCICN: Internal H-F Oscillator Control 140
SFR Definition 19.4. CLKMUL: Clock Multiplier Control 141
SFR Definition 19.5. OSCLCN: Internal L-F Oscillator Control 142
SFR Definition 19.6. OSCXCN: External Oscillator Control 146
SFR Definition 20.1. XBR0: Port I/O Crossbar Register 0 153
SFR Definition 20.2. XBR1: Port I/O Crossbar Register 1 154
SFR Definition 20.3. XBR2: Port I/O Crossbar Register 2 155
SFR Definition 20.4. P0: Port 0 156
SFR Definition 20.5. P0MDIN: Port 0 Input Mode 156
SFR Definition 20.6. P0MDOUT: Port 0 Output Mode 157
SFR Definition 20.7. P0SKIP: Port 0 Skip 157
SFR Definition 20.8. P1: Port 1 158
SFR Definition 20.9. P1MDIN: Port 1 Input Mode 158
SFR Definition 20.10. P1MDOUT: Port 1 Output Mode 159
SFR Definition 20.11. P1SKIP: Port 1 Skip 159
SFR Definition 20.12. P2: Port 2 160
SFR Definition 20.13. P2MDIN: Port 2 Input Mode 160
SFR Definition 20.14. P2MDOUT: Port 2 Output Mode 161
SFR Definition 20.15. P2SKIP: Port 2 Skip 161
SFR Definition 20.16. P3: Port 3 162
SFR Definition 20.17. P3MDIN: Port 3 Input Mode 162
SFR Definition 20.18. P3MDOUT: Port 3 Output Mode 163
SFR Definition 20.19. P3SKIP: Port 3 Skip 163
SFR Definition 20.20. P4: Port 4 164
SFR Definition 20.21. P4MDIN: Port 4 Input Mode 164
SFR Definition 20.22. P4MDOUT: Port 4 Output Mode 165
SFR Definition 21.1. SMB0CF: SMBus Clock/Configuration 172
SFR Definition 21.2. SMB1CF: SMBus Clock/Configuration 173
SFR Definition 21.3. SMBTC: SMBus Timing Control 174
SFR Definition 21.4. SMB0CN: SMBus Control 176
SFR Definition 21.5. SMB1CN: SMBus Control 177
SFR Definition 21.6. SMB0ADR: SMBus0 Slave Address 179
SFR Definition 21.7. SMB0ADM: SMBus0 Slave Address Mask 180
SFR Definition 21.8. SMB1ADR: SMBus1 Slave Address 180
SFR Definition 21.9. SMB1ADM: SMBus1 Slave Address Mask 181
SFR Definition 21.10. SMB0DAT: SMBus Data 182
SFR Definition 21.11. SMB1DAT: SMBus Data 183
SFR Definition 22.1. SCON0: Serial Port 0 Control 198
SFR Definition 22.2. SBUF0: Serial (UART0) Port Data Buffer 199
SFR Definition 23.1. SCON1: UART1 Control 206
SFR Definition 23.2. SMOD1: UART1 Mode 207
SFR Definition 23.3. SBUF1: UART1 Data Buffer 208
SFR Definition 23.4. SBCON1: UART1 Baud Rate Generator Control 209
SFR Definition 23.5. SBRLH1: UART1 Baud Rate Generator High Byte 209

SFR Definition 23.6. SBRLL1: UART1 Baud Rate Generator Low Byte 210
SFR Definition 24.1. SPI0CFG: SPI0 Configuration 218
SFR Definition 24.2. SPI0CN: SPI0 Control 219
SFR Definition 24.3. SPI0CKR: SPI0 Clock Rate 220
SFR Definition 24.4. SPI0DAT: SPI0 Data 220
SFR Definition 25.1. CKCON: Clock Control 225
SFR Definition 25.2. CKCON1: Clock Control 1 226
SFR Definition 25.3. TCON: Timer Control 231
SFR Definition 25.4. TMOD: Timer Mode 232
SFR Definition 25.5. TL0: Timer 0 Low Byte 233
SFR Definition 25.6. TL1: Timer 1 Low Byte 233
SFR Definition 25.7. TH0: Timer 0 High Byte 234
SFR Definition 25.8. TH1: Timer 1 High Byte 234
SFR Definition 25.9. TMR2CN: Timer 2 Control 239
SFR Definition 25.10. TMR2RLL: Timer 2 Reload Register Low Byte 240
SFR Definition 25.11. TMR2RLH: Timer 2 Reload Register High Byte 240
SFR Definition 25.12. TMR2L: Timer 2 Low Byte 240
SFR Definition 25.13. TMR2H Timer 2 High Byte 241
SFR Definition 25.14. TMR3CN: Timer 3 Control 246
SFR Definition 25.15. TMR3RLL: Timer 3 Reload Register Low Byte 247
SFR Definition 25.16. TMR3RLH: Timer 3 Reload Register High Byte 247
SFR Definition 25.17. TMR3L: Timer 3 Low Byte 247
SFR Definition 25.18. TMR3H Timer 3 High Byte 248
SFR Definition 25.19. TMR4CN: Timer 4 Control 251
SFR Definition 25.20. TMR4RLL: Timer 4 Reload Register Low Byte 252
SFR Definition 25.21. TMR4RLH: Timer 4 Reload Register High Byte 252
SFR Definition 25.22. TMR4L: Timer 4 Low Byte 252
SFR Definition 25.23. TMR4H Timer 4 High Byte 253
SFR Definition 25.24. TMR5CN: Timer 5 Control 256
SFR Definition 25.25. TMR5RLL: Timer 5 Reload Register Low Byte 257
SFR Definition 25.26. TMR5RLH: Timer 5 Reload Register High Byte 257
SFR Definition 25.27. TMR5L: Timer 5 Low Byte 257
SFR Definition 25.28. TMR5H Timer 5 High Byte 258
SFR Definition 26.1. PCA0CN: PCA Control 272
SFR Definition 26.2. PCA0MD: PCA Mode 273
SFR Definition 26.3. PCA0CPMn: PCA Capture/Compare Mode 274
SFR Definition 26.4. PCA0L: PCA Counter/Timer Low Byte 275
SFR Definition 26.5. PCA0H: PCA Counter/Timer High Byte 275
SFR Definition 26.6. PCA0CPLn: PCA Capture Module Low Byte 276
SFR Definition 26.7. PCA0CPHn: PCA Capture Module High Byte 276
C2 Register Definition 27.1. C2ADD: C2 Address 277
C2 Register Definition 27.2. DEVICEID: C2 Device ID 278
C2 Register Definition 27.3. REVID: C2 Revision ID 278
C2 Register Definition 27.4. FPCTL: C2 Flash Programming Control 279
C2 Register Definition 27.5. FPDAT: C2 Flash Programming Data 279

1. System Overview

C8051F388/9/A/B devices are fully integrated mixed-signal System-on-a-Chip MCUs. Highlighted features are listed below. Refer to Table 1.1 for specific product feature selection.

- High-speed pipelined 8051-compatible microcontroller core (up to 48 MIPS)
- In-system, full-speed, non-intrusive debug interface (on-chip)
- Supply Voltage Regulator
- True 10-bit 500 ksps differential / single-ended ADC with analog multiplexer
- On-chip Voltage Reference and Temperature Sensor
- On-chip Voltage Comparators (2)
- Precision internal calibrated 48 MHz internal oscillator
- Internal low-frequency oscillator for additional power savings
- Up to 64 kB of on-chip Flash memory
- Up to 4352 Bytes of on-chip RAM (256 + 4 kB)
- External Memory Interface (EMIF) available on 48-pin versions.
- 2 I^2C/SMBus, 2 UARTs, and Enhanced SPI serial interfaces implemented in hardware
- Four general-purpose 16-bit timers
- Programmable Counter/Timer Array (PCA) with five capture/compare modules and Watchdog Timer function
- On-chip Power-On Reset, V_{DD} Monitor, and Missing Clock Detector
- Up to 40 Port I/O (5 V tolerant)

With on-chip Power-On Reset, V_{DD} monitor, Voltage Regulator, Watchdog Timer, and clock oscillator, C8051F388/9/A/B devices are truly stand-alone System-on-a-Chip solutions. The Flash memory can be reprogrammed in-circuit, providing non-volatile data storage, and also allowing field upgrades of the 8051 firmware. User software has complete control of all peripherals, and may individually shut down any or all peripherals for power savings.

The on-chip Silicon Labs 2-Wire (C2) Development Interface allows non-intrusive (uses no on-chip resources), full speed, in-circuit debugging using the production MCU installed in the final application. This debug logic supports inspection and modification of memory and registers, setting breakpoints, single stepping, run and halt commands. All analog and digital peripherals are fully functional while debugging using C2. The two C2 interface pins can be shared with user functions, allowing in-system debugging without occupying package pins.

Each device is specified for 2.7–5.25 V operation over the industrial temperature range (–40 to +85 °C). For voltages above 3.6 V, the on-chip Voltage Regulator must be used. The Port I/O and $\overline{RST}$ pins are tolerant of input signals up to 5 V. C8051F388/9/A/B devices are available in 48-pin TQFP, 32-pin LQFP, or 32-pin QFN packages. See Table 1.1, “Product Selection Guide,” on page 16 for feature and package choices.

Table 1.1. Product Selection Guide

Ordering Part Number	MIPS (Peak)	Flash Memory (Bytes)	RAM	Calibrated Internal Oscillator	Low Frequency Oscillator	Supply Voltage Regulator	SMBus/I2C	Enhanced SPI	UARTs	Timers (16-bit)	Programmable Counter Array	Digital Port I/O	External Memory Interface (EMIF)	10-bit 500ksps ADC	Temperature Sensor	Voltage Reference	Analog Comparators	Package
C8051F388-B-GQ	48	64k	4352	✓	✓	✓	2	✓	2	6	✓	40	✓	✓	✓	✓	2	TQFP48
C8051F389-B-GQ	48	64k	4352	✓	✓	✓	2	✓	2	6	✓	25	—	✓	✓	✓	2	LQFP32
C8051F389-B-GM	48	64k	4352	✓	✓	✓	2	✓	2	6	✓	25	—	✓	✓	✓	2	QFN32
C8051F38A-B-GQ	48	32k	2304	✓	✓	✓	2	✓	2	6	✓	40	✓	✓	✓	✓	2	TQFP48
C8051F38B-B-GQ	48	32k	2304	✓	✓	✓	2	✓	2	6	✓	25	—	✓	✓	✓	2	LQFP32
C8051F38B-B-GM	48	32k	2304	✓	✓	✓	2	✓	2	6	✓	25	—	✓	✓	✓	2	QFN32

Note: Starting with silicon revision B, the ordering part numbers have been updated to include the silicon revision and use this format: "C8051F388-B-GQ".

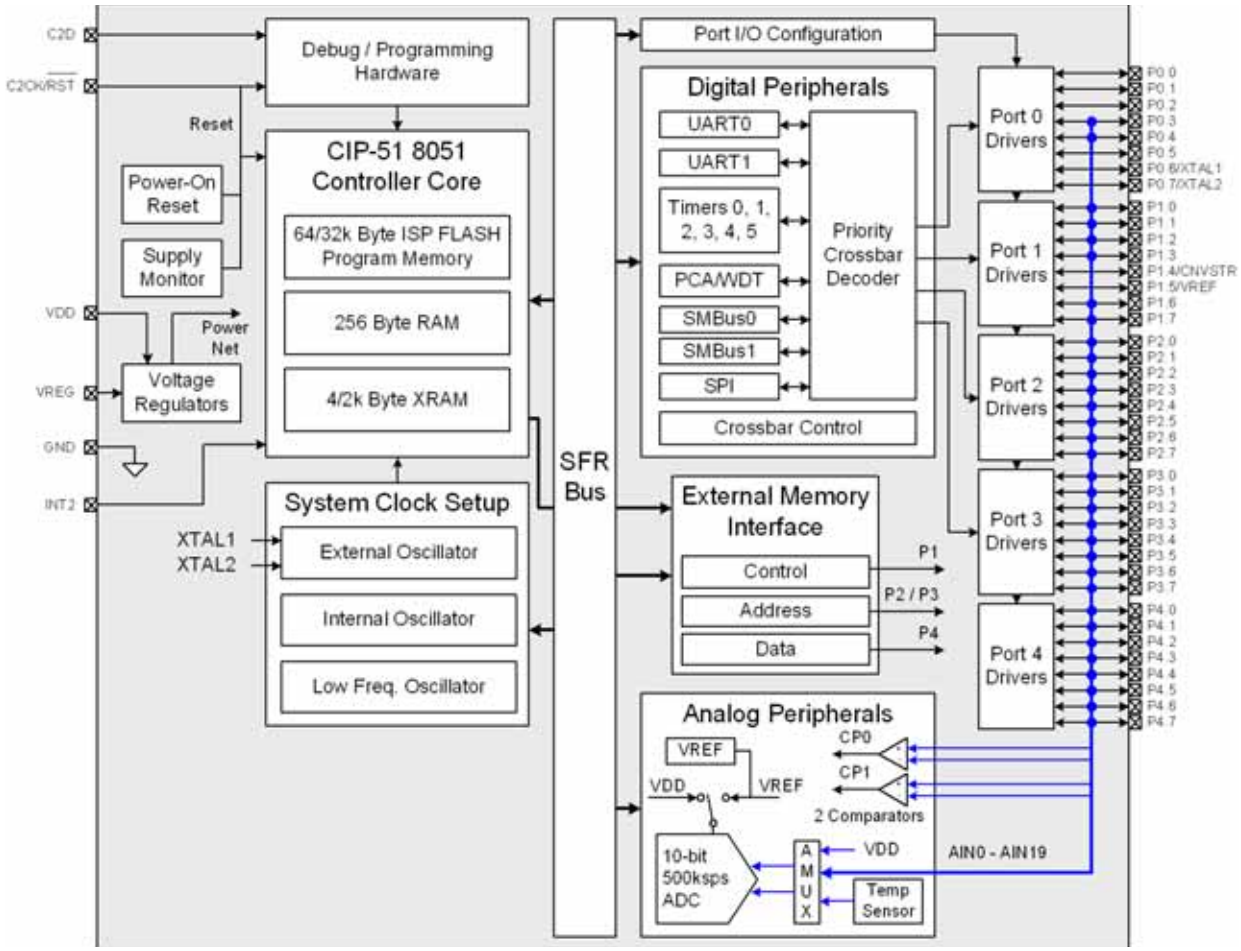

Figure 1.1. C8051F388/A Block Diagram

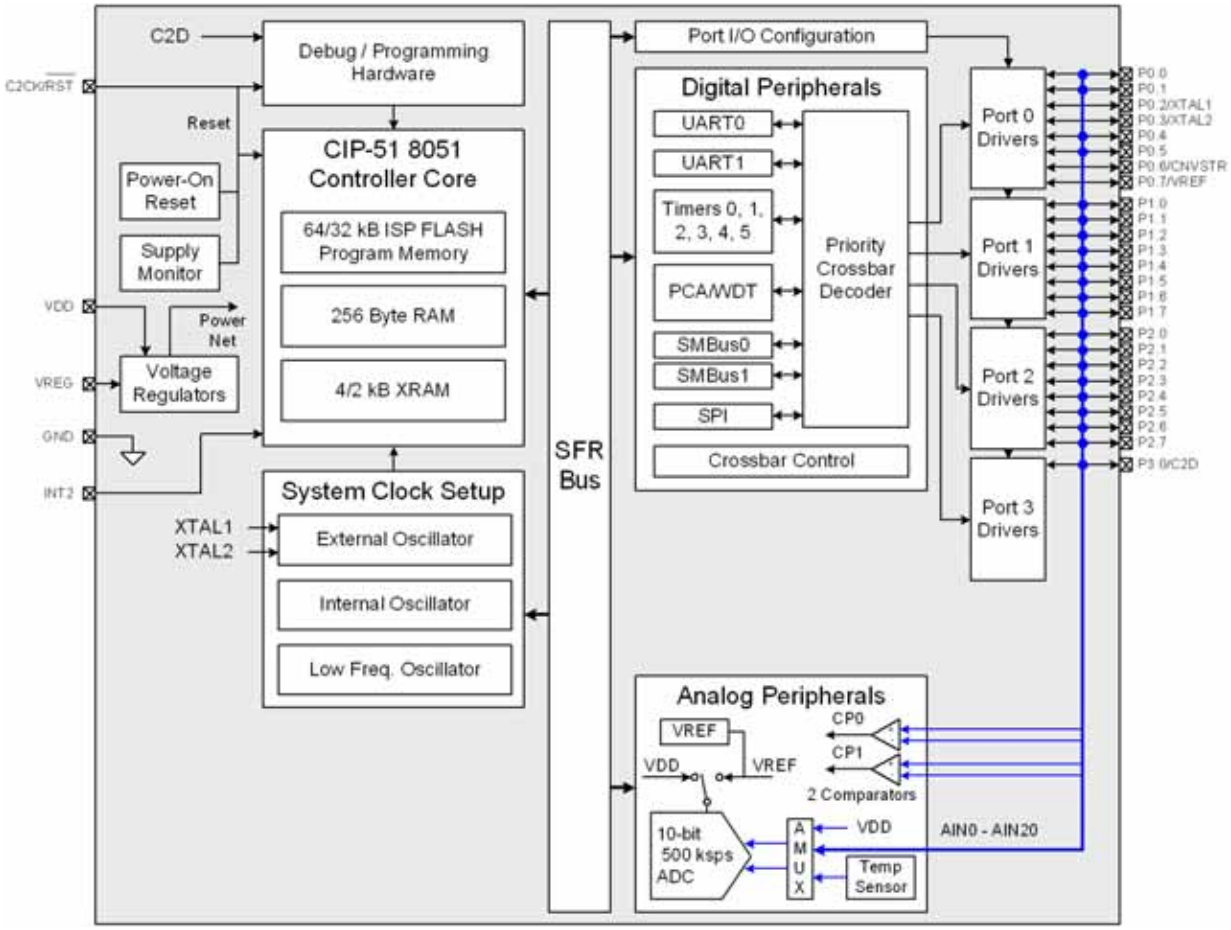

Figure 1.2. C8051F389/B Block Diagram

2. C8051F34x Compatibility

The C8051F388/9/A/B family is designed to be a pin and code compatible replacement for the C8051F34x device family. The C8051F388/9/A/B device should function as a drop-in replacement for the C8051F34x devices in most applications that do not use USB. Table 2.1 lists recommended replacement part numbers for C8051F34x devices. See “2.1. Hardware Incompatibilities” to determine if any changes are necessary when upgrading an existing C8051F34x design to the C8051F388/9/A/B.

Table 2.1. C8051F388/9/A/B Replacement Part Numbers

C8051F34x Part Number	C8051F38x Part Number
C8051F340-GQ	C8051F388-B-GQ
C8051F341-GQ	C8051F38A-B-GQ
C8051F342-GQ	C8051F389-B-GQ
C8051F342-GM	C8051F389-B-GM
C8051F343-GQ	C8051F38B-B-GQ
C8051F343-GM	C8051F38B-B-GM
C8051F344-GQ	C8051F388-B-GQ
C8051F345-GQ	C8051F38A-B-GQ
C8051F346-GQ	C8051F389-B-GQ
C8051F346-GM	C8051F389-B-GM
C8051F347-GQ	C8051F38B-B-GQ
C8051F347-GM	C8051F38B-B-GM
C8051F348-GQ	C8051F38A-B-GQ
C8051F349-GQ	C8051F38B-B-GQ
C8051F349-GM	C8051F38B-B-GM
C8051F34A-GQ	C8051F389-B-GQ
C8051F34A-GM	C8051F389-B-GM
C8051F34B-GQ	C8051F38B-B-GQ
C8051F34B-GM	C8051F38B-B-GM
C8051F34C-GQ	C8051F388-B-GQ
C8051F34D-GQ	C8051F389-B-GQ

2.1. Hardware Incompatibilities

While the C8051F388/9/A/B family includes a number of new features not found on the C8051F34x family, there are some differences that should be considered for any design port.

- **Clock Multiplier**: The C8051F388/9/A/B does not include the 4x clock multiplier from the C8051F34x device families. This change only impacts systems which use the clock multiplier in conjunction with an external oscillator source.
- **USB**: The C8051F388/9/A/B devices do not include the USB module.
- **External Oscillator C and RC Modes**: The C and RC modes of the oscillator have a divide-by-2 stage on the C8051F388/9/A/B to aid in noise immunity. This was not present on the C8051F34x device family, and any clock generated with C or RC mode will change accordingly.
- **Fab Technology**: The C8051F388/9/A/B is manufactured using a different technology process than the C8051F34x. As a result, many of the electrical performance parameters will have subtle differences. These differences should not affect most systems but it is nonetheless important to review the electrical parameters for any blocks that are used in the design, and ensure they are compatible with the existing hardware.

3. Pinout and Package Definitions

Table 3.1. Pin Definitions for the C8051F388/9/A/B

Name	Pin Numbers		Type	Description
	48-pin	32-pin		
V_{DD}	10	6	Power In Power Out	2.7–3.6 V Power Supply Voltage Input. 3.3 V Voltage Regulator Output.
GND	7	3		Ground.
$\overline{RST}$/ C2CK	13	9	D I/O D I/O	Device Reset. Open-drain output of internal POR or V_{DD} monitor. An external source can initiate a system reset by driving this pin low for at least 15 µs. Clock signal for the C2 Debug Interface.
C2D	14	—	D I/O	Bi-directional data signal for the C2 Debug Interface.
P3.0 / C2D	—	10	D I/O D I/O	Port 3.0. See Section 20 for a complete description of Port 3. Bi-directional data signal for the C2 Debug Interface.
REGIN	11	7	Power In	5 V Regulator Input. This pin is the input to the on-chip voltage regulator.
INT2	12	8	D In	INT2 interrupt input.
NC	8	4		This pin is a no-connect and can be left floating.
NC	9	5		This pin is a no-connect and can be left floating.
P0.0	6	2	D I/O or A In	Port 0.0. See Section 20 for a complete description of Port 0.
P0.1	5	1	D I/O or A In	Port 0.1.
P0.2	4	32	D I/O or A In	Port 0.2.
P0.3	3	31	D I/O or A In	Port 0.3.
P0.4	2	30	D I/O or A In	Port 0.4.
P0.5	1	29	D I/O or A In	Port 0.5.
P0.6	48	28	D I/O or A In	Port 0.6.
P0.7	47	27	D I/O or A In	Port 0.7.

Table 3.1. Pin Definitions for the C8051F388/9/A/B (Continued)

Name	Pin Numbers		Type	Description
	48-pin	32-pin		
P1.0	46	26	D I/O or A In	Port 1.0. See Section 20 for a complete description of Port 1.
P1.1	45	25	D I/O or A In	Port 1.1.
P1.2	44	24	D I/O or A In	Port 1.2.
P1.3	43	23	D I/O or A In	Port 1.3.
P1.4	42	22	D I/O or A In	Port 1.4.
P1.5	41	21	D I/O or A In	Port 1.5.
P1.6	40	20	D I/O or A In	Port 1.6.
P1.7	39	19	D I/O or A In	Port 1.7.
P2.0	38	18	D I/O or A In	Port 2.0. See Section 20 for a complete description of Port 2.
P2.1	37	17	D I/O or A In	Port 2.1.
P2.2	36	16	D I/O or A In	Port 2.2.
P2.3	35	15	D I/O or A In	Port 2.3.
P2.4	34	14	D I/O or A In	Port 2.4.
P2.5	33	13	D I/O or A In	Port 2.5.
P2.6	32	12	D I/O or A In	Port 2.6.
P2.7	31	11	D I/O or A In	Port 2.7.
P3.0	30	—	D I/O or A In	Port 3.0. See Section 20 for a complete description of Port 3.
P3.1	29	—	D I/O or A In	Port 3.1.

Table 3.1. Pin Definitions for the C8051F388/9/A/B (Continued)

Name	Pin Numbers		Type	Description
	48-pin	32-pin		
P3.2	28	—	D I/O or A In	Port 3.2.
P3.3	27	—	D I/O or A In	Port 3.3.
P3.4	26	—	D I/O or A In	Port 3.4.
P3.5	25	—	D I/O or A In	Port 3.5.
P3.6	24	—	D I/O or A In	Port 3.6.
P3.7	23	—	D I/O or A In	Port 3.7.
P4.0	22	—	D I/O or A In	Port 4.0. See Section 20 for a complete description of Port 4.
P4.1	21	—	D I/O or A In	Port 4.1.
P4.2	20	—	D I/O or A In	Port 4.2.
P4.3	19	—	D I/O or A In	Port 4.3.
P4.4	18	—	D I/O or A In	Port 4.4.
P4.5	17	—	D I/O or A In	Port 4.5.
P4.6	16	—	D I/O or A In	Port 4.6.
P4.7	15	—	D I/O or A In	Port 4.7.

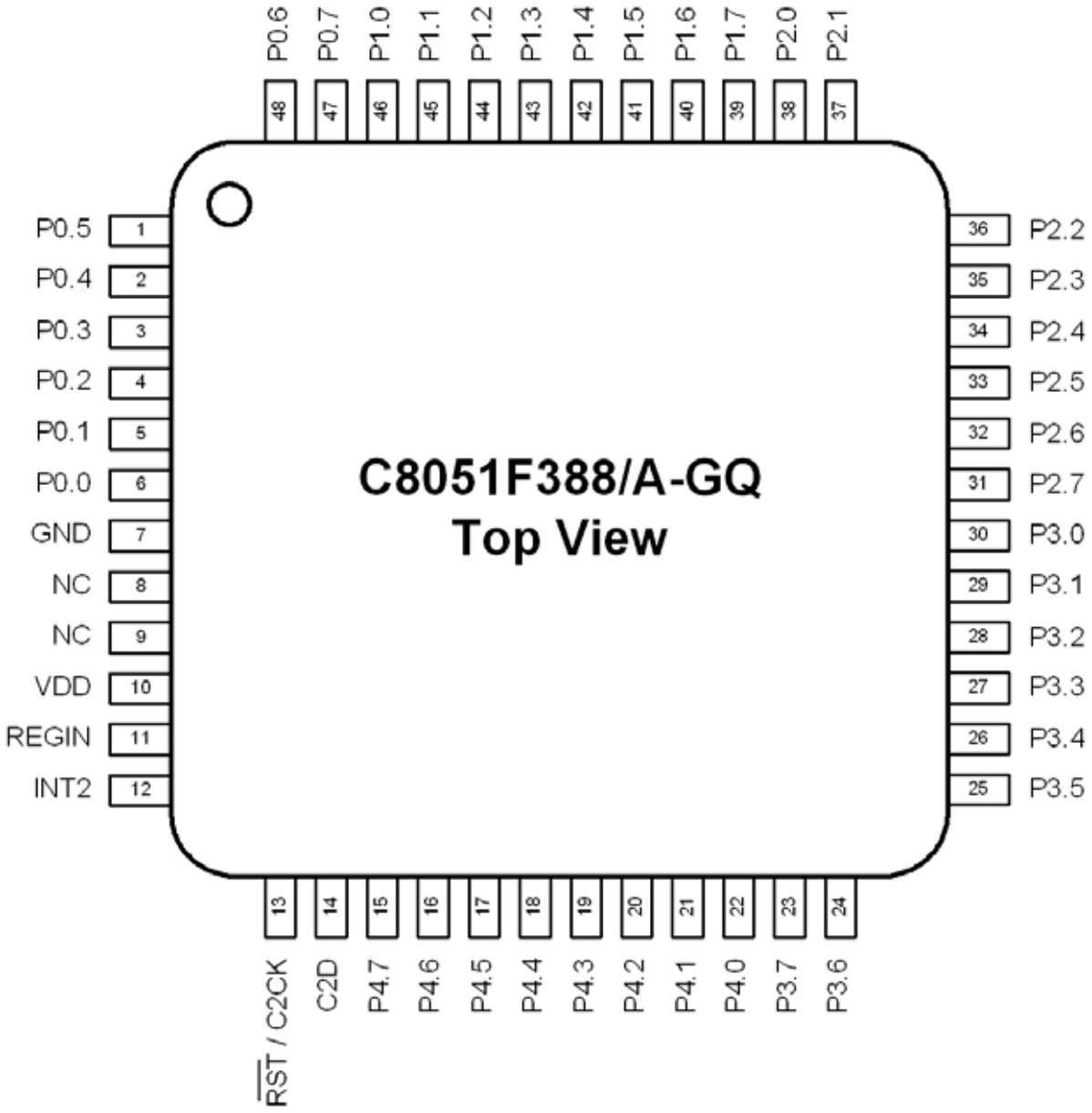

Figure 3.1. TQFP-48 (C8051F388/A) Pinout Diagram (Top View)

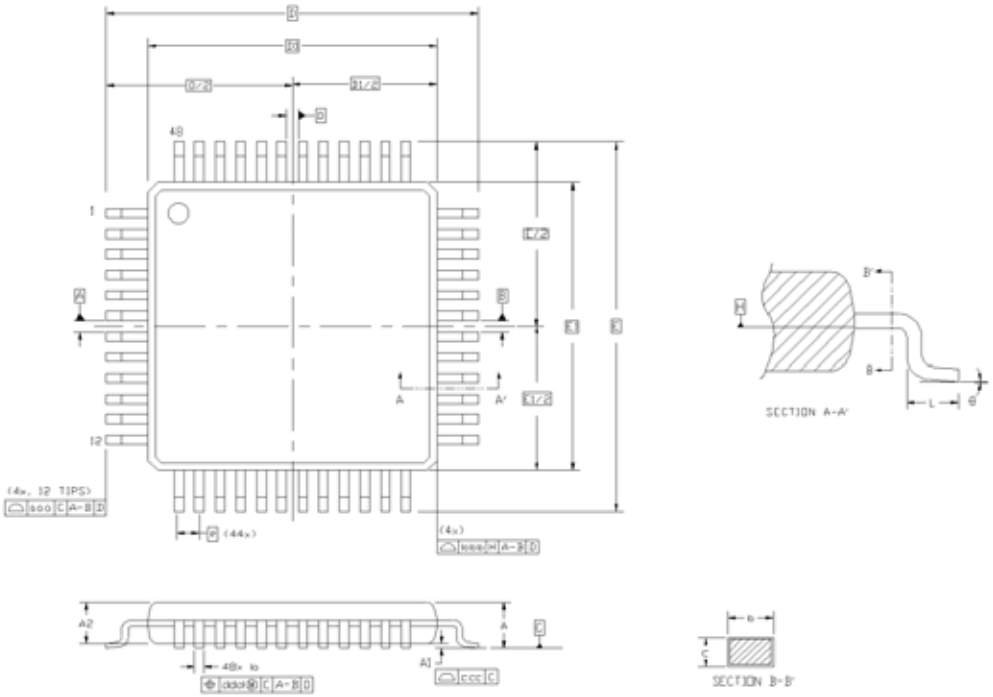

Figure 3.2. TQFP-48 Package Diagram

Table 3.2. TQFP-48 Package Dimensions

Dimension	Min	Nom	Max	Dimension	Min	Nom	Max
A	—	—	1.20	E		9.00 BSC	
A1	0.05	—	0.15	E1		7.00 BSC	
A2	0.95	1.00	1.05	L	0.45	0.60	0.75
b	0.17	0.22	0.27	aaa		0.20	
c	0.09	—	0.20	bbb		0.20	
D		9.00 BSC		ccc		0.08	
D1		7.00 BSC		ddd		0.08	
e		0.50 BSC		q	0°	3.5°	7°

Notes:

1. All dimensions shown are in millimeters (mm) unless otherwise noted.
2. Dimensioning and Tolerancing per ANSI Y14.5M-1994.
3. This drawing conforms to JEDEC outline MS-026, variation ABC.
4. The recommended card reflow profile is per the JEDEC/IPC J-STD-020 specification for Small Body Components.

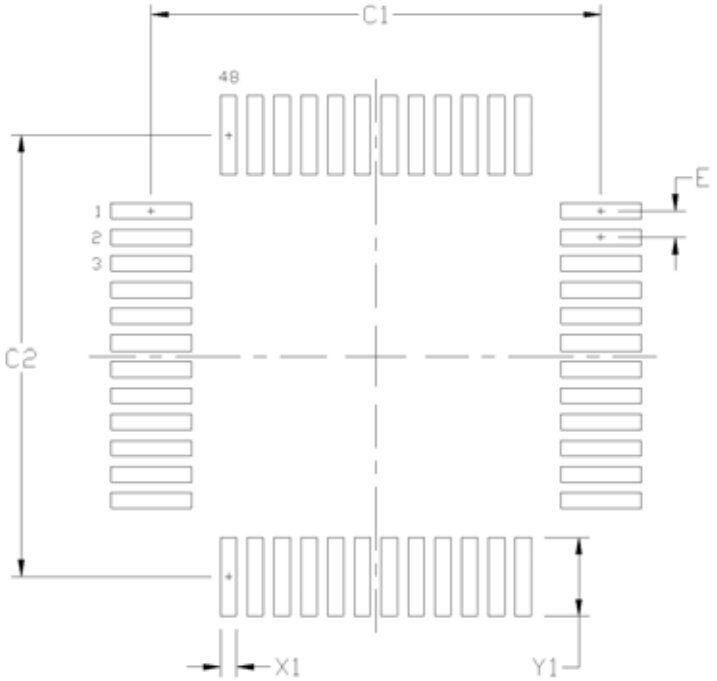

Figure 3.3. TQFP-48 Recommended PCB Land Pattern

Table 3.3. TQFP-48 PCB Land Pattern Dimensions

Dimension	Min	Max
C1	8.30	8.40
C2	8.30	8.40
E	0.50 BSC	
X1	0.20	0.30
Y1	1.40	1.50

Notes:

General:

1. All dimensions shown are in millimeters (mm) unless otherwise noted.
2. This Land Pattern Design is based on the IPC-7351 guidelines.

Solder Mask Design:

3. All metal pads are to be non-solder mask defined (NSMD). Clearance between the solder mask and the metal pad is to be 60 µm minimum, all the way around the pad.

Stencil Design:

4. A stainless steel, laser-cut and electro-polished stencil with trapezoidal walls should be used to assure good solder paste release.
5. The stencil thickness should be 0.125 mm (5 mils).
6. The ratio of stencil aperture to land pad size should be 1:1 for all pads.

Card Assembly:

7. A No-Clean, Type-3 solder paste is recommended.
8. The recommended card reflow profile is per the JEDEC/IPC J-STD-020 specification for Small Body Components.

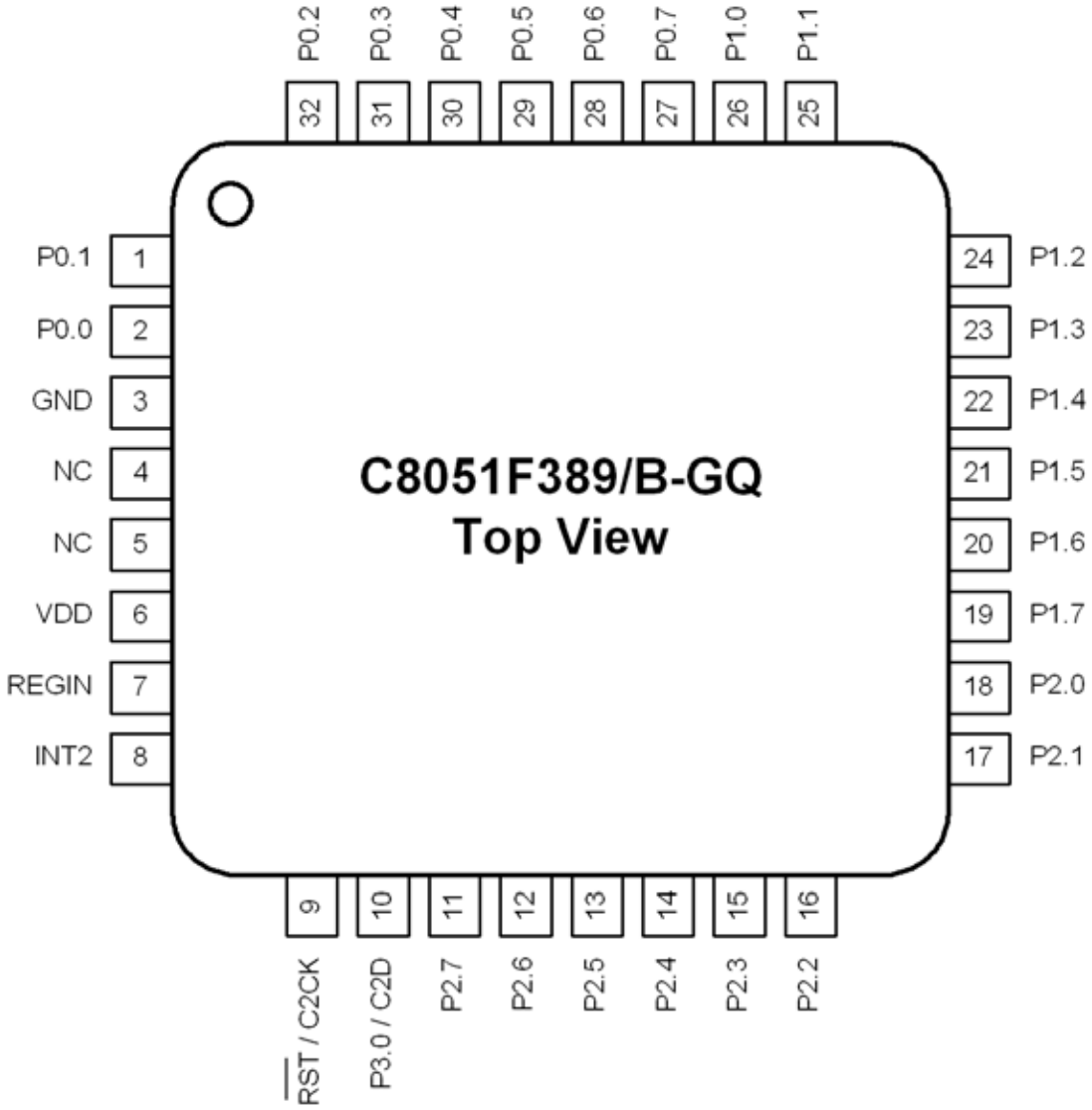

Figure 3.4. LQFP-32 (C8051F389/B) Pinout Diagram (Top View)

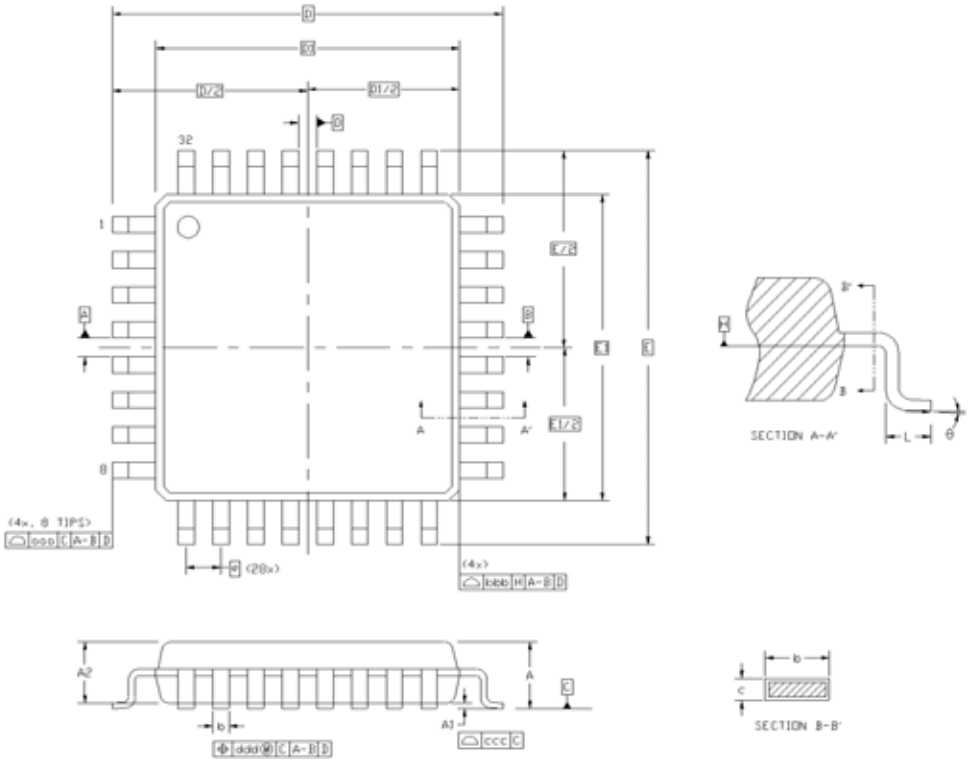

Figure 3.5. LQFP-32 Package Diagram

Table 3.4. LQFP-32 Package Dimensions

Dimension	Min	Nom	Max	Dimension	Min	Nom	Max
A	—	—	1.60	E		9.00 BSC	
A1	0.05	—	0.15	E1		7.00 BSC	
A2	1.35	1.40	1.45	L	0.45	0.60	0.75
b	0.30	0.37	0.45	aaa		0.20	
c	0.09	—	0.20	bbb		0.20	
D		9.00 BSC		ccc		0.10	
D1		7.00 BSC		ddd		0.20	
e		0.80 BSC		q	0°	3.5°	7°

Notes:

1. All dimensions shown are in millimeters (mm) unless otherwise noted.
2. Dimensioning and Tolerancing per ANSI Y14.5M-1994.
3. This drawing conforms to JEDEC outline MS-026, variation BBA.
4. The recommended card reflow profile is per the JEDEC/IPC J-STD-020 specification for Small Body Components.

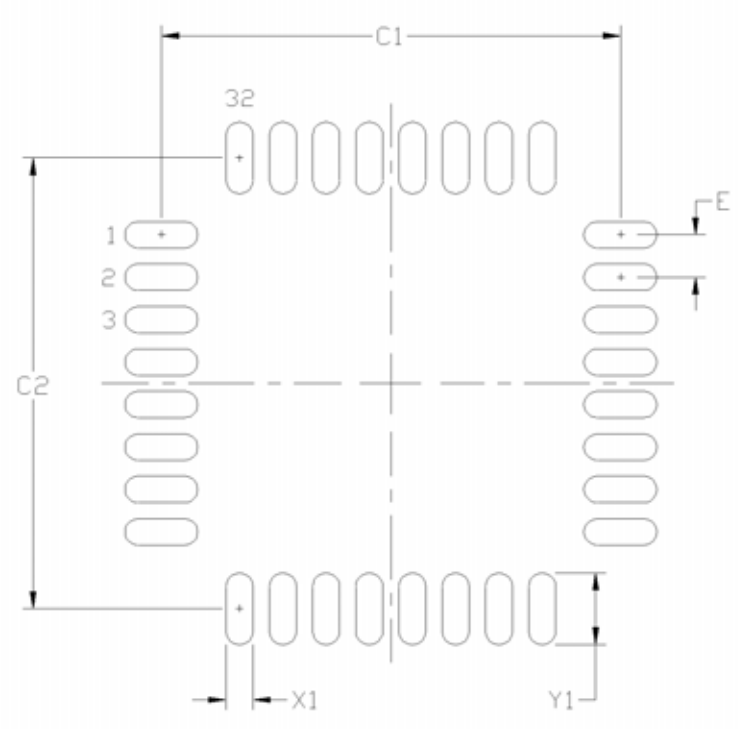

Figure 3.6. LQFP-32 Recommended PCB Land Pattern

Table 3.5. LQFP-32 PCB Land Pattern Dimensions

Dimension	Min	Max
C1	8.40	8.50
C2	8.40	8.50
E	0.80 BSC	
X1	0.40	0.50
Y1	1.25	1.35

Notes:
General:
1. All dimensions shown are in millimeters (mm) unless otherwise noted.
2. This Land Pattern Design is based on the IPC-7351 guidelines.

Solder Mask Design:
3. All metal pads are to be non-solder mask defined (NSMD). Clearance between the solder mask and the metal pad is to be 60 µm minimum, all the way around the pad.

Stencil Design:
4. A stainless steel, laser-cut and electro-polished stencil with trapezoidal walls should be used to assure good solder paste release.
5. The stencil thickness should be 0.125 mm (5 mils).
6. The ratio of stencil aperture to land pad size should be 1:1 for all pads.

Card Assembly:
7. A No-Clean, Type-3 solder paste is recommended.
8. The recommended card reflow profile is per the JEDEC/IPC J-STD-020 specification for Small Body Components.

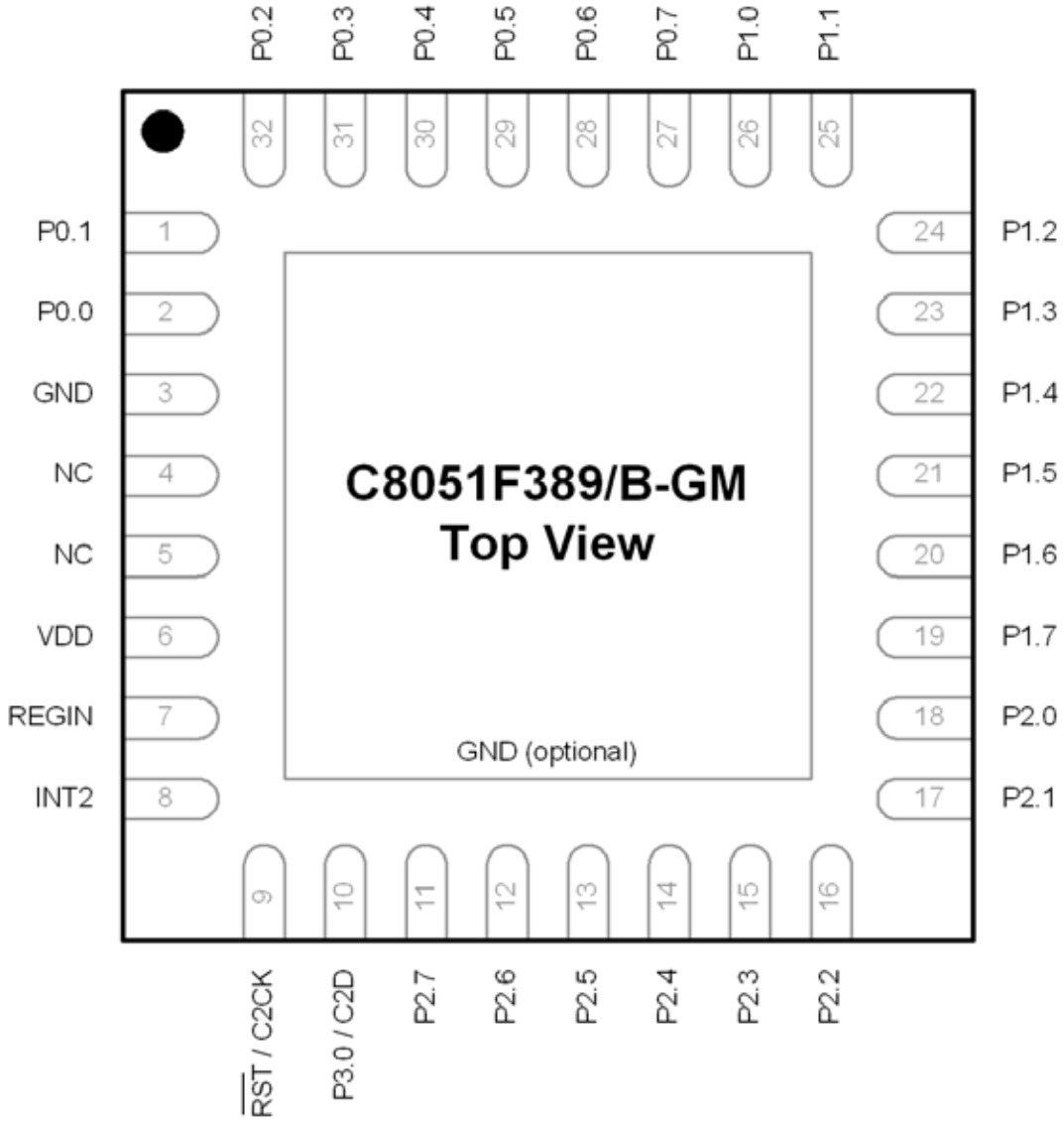

Figure 3.7. QFN-32 (C8051F389/B) Pinout Diagram (Top View)

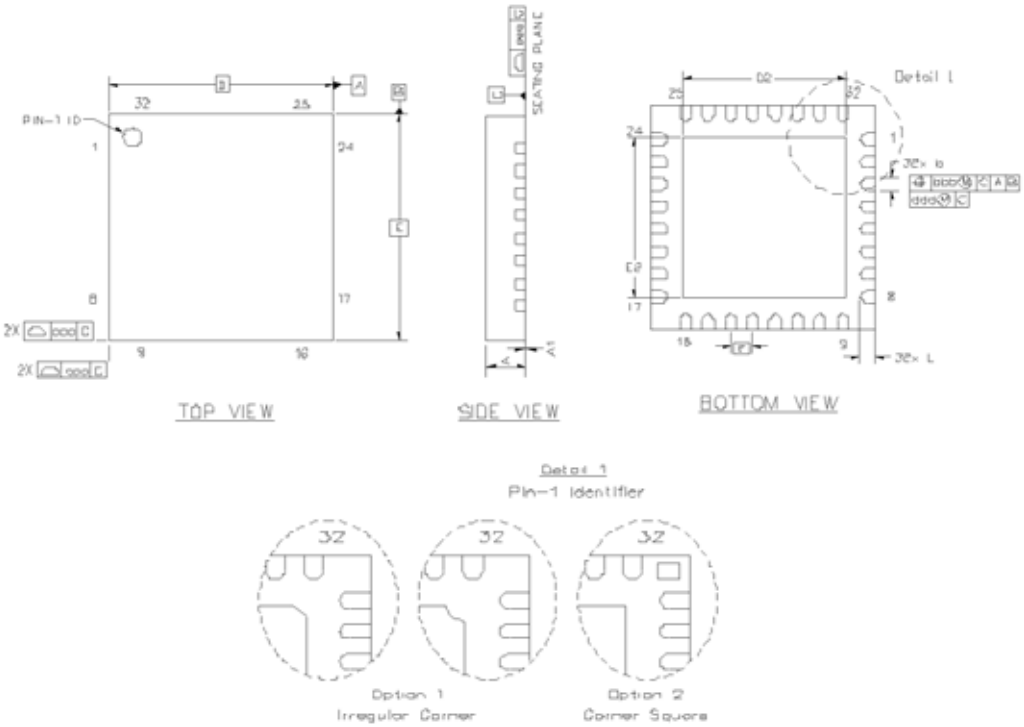

Figure 3.8. QFN-32 Package Drawing

Table 3.6. QFN-32 Package Dimensions

Dimension	Min	Typ	Max	Dimension	Min	Typ	Max
A	0.80	0.85	0.90	E2	3.20	3.30	3.40
A1	0.00	0.02	0.05	L	0.35	0.40	0.45
b	0.18	0.25	0.30	aaa	—	—	0.10
D	5.00 BSC			bbb	—	—	0.10
D2	3.20	3.30	3.40	ddd	—	—	0.05
e	0.50 BSC			eee	—	—	0.08
E	5.00 BSC						

Notes:

1. All dimensions shown are in millimeters (mm) unless otherwise noted.
2. Dimensioning and Tolerancing per ANSI Y14.5M-1994.
3. This drawing conforms to the JEDEC Solid State Outline MO-220, variation VHHD except for custom features D2, E2, and L which are toleranced per supplier designation.
4. The recommended card reflow profile is per the JEDEC/IPC J-STD-020 specification for Small Body Components.

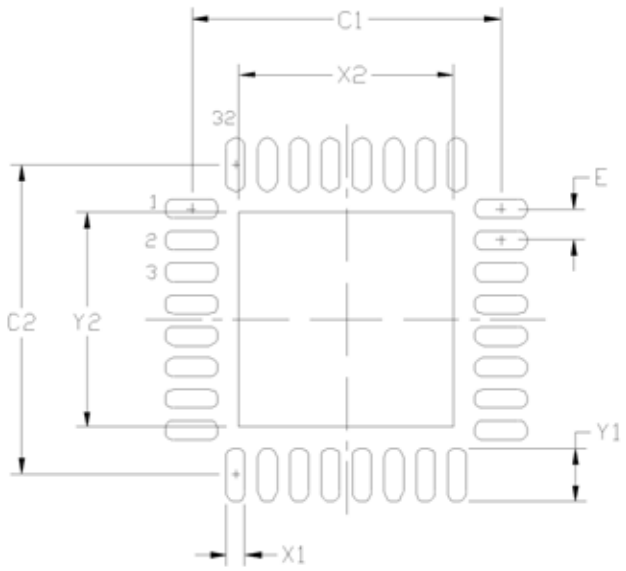

Figure 3.9. QFN-32 Recommended PCB Land Pattern

Table 3.7. QFN-32 PCB Land Pattern Dimensions

Dimension	Min	Max
C1	4.80	4.90
C2	4.80	4.90
E	0.50 BSC	
X1	0.20	0.30

Dimension	Min	Max
X2	3.20	3.40
Y1	0.75	0.85
Y2	3.20	3.40

Notes:

General:

1. All dimensions shown are in millimeters (mm) unless otherwise noted.
2. This Land Pattern Design is based on the IPC-7351 guidelines.

Solder Mask Design:

3. All metal pads are to be non-solder mask defined (NSMD). Clearance between the solder mask and the metal pad is to be 60 µm minimum, all the way around the pad.

Stencil Design:

4. A stainless steel, laser-cut and electro-polished stencil with trapezoidal walls should be used to assure good solder paste release.
5. The stencil thickness should be 0.125 mm (5 mils).
6. The ratio of stencil aperture to land pad size should be 1:1 for all perimeter pins.
7. A 3x3 array of 1.0 mm openings on a 1.2mm pitch should be used for the center pad to assure the proper paste volume.

Card Assembly:

8. A No-Clean, Type-3 solder paste is recommended.
9. The recommended card reflow profile is per the JEDEC/IPC J-STD-020 specification for Small Body Components.

4. Typical Connection Diagrams

This section provides typical connection diagrams for C8051F388/9/A/B devices.

4.1. Power

Figure 4.1 shows a typical connection diagram for the power pins of the C8051F388/9/A/B devices when the internal regulator is in use. The INT2 pin may be left floating.

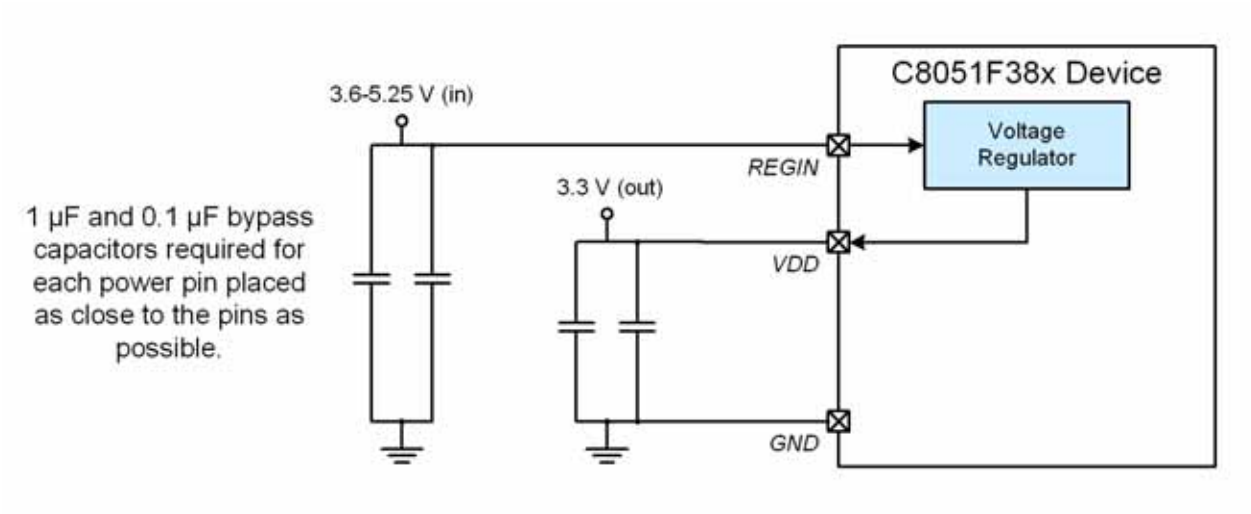

Figure 4.1. Connection Diagram with Voltage Regulator Used

Figure 4.2 shows a typical connection diagram for the power pins of the C8051F388/9/A/B devices when the internal regulator is not used.

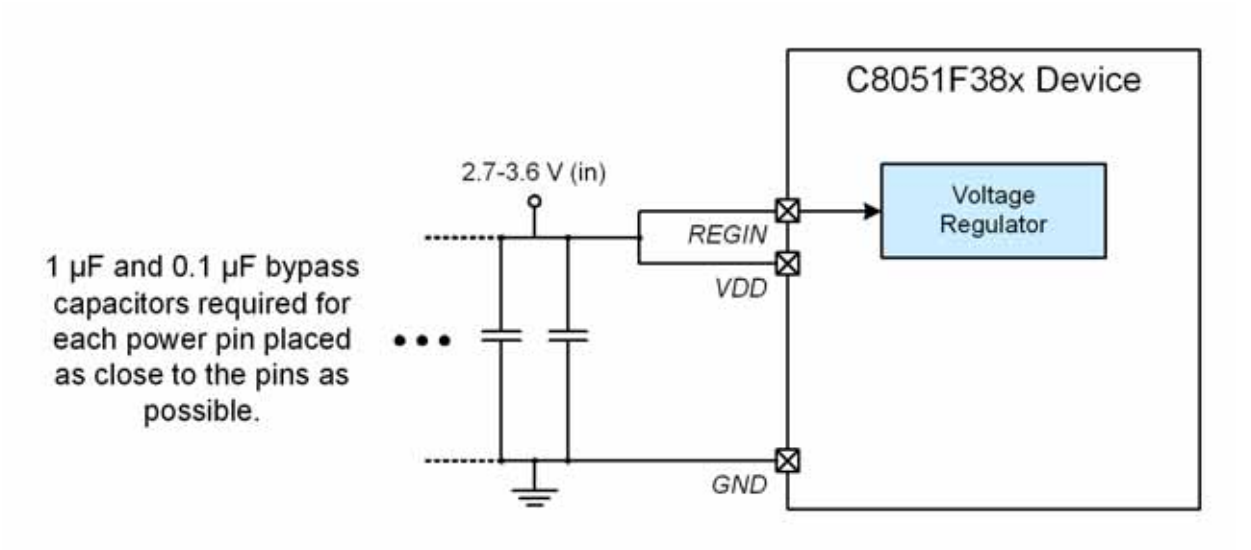

Figure 4.2. Connection Diagram with Voltage Regulator Not Used

5. Electrical Characteristics

5.1. Absolute Maximum Specifications

Table 5.1. Absolute Maximum Ratings

Parameter	Conditions	Min	Typ	Max	Units
Junction Temperature Under Bias		–55	—	125	°C
Storage Temperature		–65	—	150	°C
Voltage on $\overline{RST}$, INT2, or any Port I/O Pin with Respect to GND	$V_{DD} \geq 2.2$ V $V_{DD} < 2.2$ V	–0.3 –0.3	— —	5.8 V_{DD} + 3.6	V V
Voltage on V_{DD} with Respect to GND	Regulator1 in Normal Mode Regulator1 in Bypass Mode	–0.3 –0.3	— —	4.2 1.98	V V
Maximum Total Current through V_{DD} or GND		—	—	500	mA
Maximum Output Current sunk by $\overline{RST}$ or any Port Pin		—	—	100	mA

Note: Stresses above those listed under “Absolute Maximum Ratings” may cause permanent damage to the device. This is a stress rating only and functional operation of the devices at those or any other conditions above those indicated in the operation listings of this specification is not implied. Exposure to maximum rating conditions for extended periods may affect device reliability.

5.2. Electrical Characteristics

Table 5.2. Global Electrical Characteristics

–40 to +85 °C, 25 MHz system clock unless otherwise specified.

Parameter	Test Condition	Min	Typ	Max	Unit
Digital Supply Voltage		V_{RST}	3.3	3.6	V
Digital Supply RAM Data Retention Voltage		—	1.5	—	V
SYSCLK (System Clock)[1]		0	—	48	MHz
Specified Operating Temperature Range		–40	—	+85	°C
Digital Supply Current—CPU Active (Normal Mode, fetching instructions from Flash)					
I_{DD}[2]	SYSCLK = 48 MHz, V_{DD} = 3.3 V	—	12	14	mA
	SYSCLK = 24 MHz, V_{DD} = 3.3 V	—	7	8	mA
	SYSCLK = 1 MHz, V_{DD} = 3.3 V	—	0.45	0.85	mA
	SYSCLK = 80 kHz, V_{DD} = 3.3 V	—	280	—	µA
Digital Supply Current—CPU Inactive (Idle Mode, not fetching instructions from Flash)					
Idle I_{DD}[2]	SYSCLK = 48 MHz, V_{DD} = 3.3 V	—	6.5	8	mA
	SYSCLK = 24 MHz, V_{DD} = 3.3 V	—	3.5	5	mA
	SYSCLK = 1 MHz, V_{DD} = 3.3 V	—	0.35	—	mA
	SYSCLK = 80 kHz, V_{DD} = 3.3 V	—	220	—	µA
Digital Supply Current (Stop or Suspend Mode, shut-down)	Oscillator not running (STOP mode), Internal Regulators OFF, V_{DD} = 3.3 V	—	1	—	µA
	Oscillator not running (STOP or SUS-PEND), REG0 and REG1 both in low power mode, V_{DD} = 3.3 V.	—	100	—	µA
	Oscillator not running (STOP or SUS-PEND), REG0 OFF, V_{DD} = 3.3 V.	—	150	—	µA

Notes:
1. SYSCLK must be at least 32 kHz to enable debugging.
2. Includes normal mode bias current for REG0 and REG1. Does not include current from internal oscillators or other analog peripherals.

Table 5.3. Port I/O DC Electrical Characteristics

V_{DD} = 2.7 to 3.6 V, –40 to +85 °C unless otherwise specified.

Parameter	Test Condition	Min	Typ	Max	Unit
Output High Voltage	I_{OH} = –3 mA, Port I/O push-pull I_{OH} = –10 µA, Port I/O push-pull I_{OH} = –10 mA, Port I/O push-pull	V_{DD} – 0.7 V_{DD} – 0.1 —	— — V_{DD} – 0.8	— — —	V
Output Low Voltage	I_{OL} = 8.5 mA I_{OL} = 10 µA I_{OL} = 25 mA	— — —	— — 1.0	0.6 0.1 —	V
Input High Voltage		2.0	—	—	V
Input Low Voltage		—	—	0.8	V
Input Leakage Current	Weak Pullup Off Weak Pullup On, V_{IN} = 0 V	— —	— 15	±1 50	µA
INT2 Detection Input Low Voltage		—	—	1.0	V
INT2 Detection Input High Voltage		3.0	—	—	V

Table 5.4. Reset Electrical Characteristics

–40 to +85 °C unless otherwise specified.

Parameter	Test Condition	Min	Typ	Max	Unit
$\overline{RST}$ Output Low Voltage	I_{OL} = 8.5 mA, V_{DD} = 2.7 V to 3.6 V	—	—	0.6	V
$\overline{RST}$ Input High Voltage		0.7 x V_{DD}	—	—	V
$\overline{RST}$ Input Low Voltage		—	—	0.3 x V_{DD}	V
$\overline{RST}$ Input Pullup Current	$\overline{RST}$ = 0.0 V	—	15	40	µA
V_{DD} Monitor Threshold (V_{RST})		2.60	2.65	2.70	V
Missing Clock Detector Time-out	Time from last system clock rising edge to reset initiation	80	580	800	µs
Reset Time Delay	Delay between release of any reset source and code execution at location 0x0000	—	—	250	µs
Minimum $\overline{RST}$ Low Time to Generate a System Reset		15	—	—	µs
V_{DD} Monitor Turn-on Time		—	—	100	µs
V_{DD} Monitor Supply Current		—	15	50	µA

Table 5.5. Internal Voltage Regulator Electrical Characteristics
–40 to +85 °C unless otherwise specified.

Parameter	Test Condition	Min	Typ	Max	Unit
Voltage Regulator (REG0)					
Input Voltage Range[1]		2.7	—	5.25	V
Output Voltage (V_{DD})[2]	Output Current = 1 to 100 mA	3.0	3.3	3.6	V
Output Current[2]		—	—	100	mA
Dropout Voltage (V_{DO})[3]		—	1	—	mV/mA
Voltage Regulator (REG1)					
Input Voltage Range		1.8	—	3.6	V

Notes:
1. Input range specified for regulation. When an external regulator is used, should be tied to V_{DD}.
2. Output current is total regulator output, including any current required by the C8051F388/9/A/B.
3. The minimum input voltage is 2.70 V or V_{DD} + V_{DO} (max load), whichever is greater.

Table 5.6. Flash Electrical Characteristics

Parameter	Test Condition	Min	Typ	Max	Unit
Flash Size	C8051F388/9* C8051F38A/B	65536* 32768	—	—	Bytes Bytes
Endurance		10k	100k	—	Erase/Write
Erase Cycle Time	25 MHz System Clock	10	15	22.5	ms
Write Cycle Time	25 MHz System Clock	10	15	20	µs

Notes:
1. 1024 bytes at location 0xFC00 to 0xFFFF are not available for program storage.
2. Data Retention Information is published in the Quarterly Quality and Reliability Report.

Table 5.7. Internal High-Frequency Oscillator Electrical Characteristics

V_{DD} = 2.7 to 3.6 V; T_A = –40 to +85 °C unless otherwise specified; Using factory-calibrated settings.

Parameter	Test Condition	Min	Typ	Max	Unit
Oscillator Frequency	IFCN = 11b	47.3	48	48.7	MHz
Oscillator Supply Current (from V_{DD})	25 °C, V_{DD} = 3.0 V, OSCICN.7 = 1, OCSICN.5 = 0	—	900	—	µA
Power Supply Sensitivity	Constant Temperature	—	110	—	ppm/V
Temperature Sensitivity	Constant Supply	—	25	—	ppm/°C

Table 5.8. Internal Low-Frequency Oscillator Electrical Characteristics

V_{DD} = 2.7 to 3.6 V; T_A = –40 to +85 °C unless otherwise specified; Using factory-calibrated settings.

Parameter	Test Condition	Min	Typ	Max	Unit
Oscillator Frequency	OSCLD = 11b	75	80	85	kHz
Oscillator Supply Current (from V_{DD})	25 °C, V_{DD} = 3.0 V, OSCLCN.7 = 1	—	4	—	µA
Power Supply Sensitivity	Constant Temperature	—	0.05	—	%/V
Temperature Sensitivity	Constant Supply	—	65	—	ppm/°C

Table 5.9. External Oscillator Electrical Characteristics

V_{DD} = 2.7 to 3.6 V; T_A = –40 to +85 °C unless otherwise specified.

Parameter	Test Condition	Min	Typ	Max	Unit
External Crystal Frequency		0.02	—	30	MHz
External CMOS Oscillator Frequency		0	—	48	MHz

Table 5.10. ADC0 Electrical Characteristics

V_{DD} = 3.0 V, VREF = 2.40 V (REFSL=0), PGA Gain = 1, –40 to +85 °C unless otherwise specified.

Parameter	Test Condition	Min	Typ	Max	Unit
DC Accuracy					
Resolution			10		bits
Integral Nonlinearity		—	±0.5	±1	LSB
Differential Nonlinearity	Guaranteed Monotonic	—	±0.5	±1	LSB
Offset Error		–2	0	2	LSB
Full Scale Error		–5	–2	0	LSB
Offset Temperature Coefficient		—	0.005	—	LSB/°C
Dynamic performance (10 kHz sine-wave single-ended input, 1 dB below Full Scale, 500 ksps)					
Signal-to-Noise Plus Distortion		55	58	—	dB
Total Harmonic Distortion	Up to the 5th harmonic	—	–73	—	dB
Spurious-Free Dynamic Range		—	78	—	dB
Conversion Rate					
SAR Conversion Clock		—	—	8.33	MHz
Conversion Time in SAR Clocks	10-bit Mode 8-bit Mode	13 11	— —	— —	clocks clocks
Track/Hold Acquisition Time		300	—	—	ns
Throughput Rate		—	—	500	ksps
Analog Inputs					
ADC Input Voltage Range	Single Ended (AIN+ – GND) Differential (AIN+ – AIN–)	0 –VREF	— —	VREF VREF	V V
Absolute Pin Voltage with respect to GND	Single Ended or Differential	0	—	V_{DD}	V
Sampling Capacitance		—	30	—	pF
Input Multiplexer Impedance		—	5	—	kΩ
Power Specifications					
Power Supply Current (V_{DD} supplied to ADC0)	Operating Mode, 500 ksps	—	750	1000	µA
Power Supply Rejection		—	1	—	mV/V

Note: Represents one standard deviation from the mean.

Table 5.11. Temperature Sensor Electrical Characteristics

V_{DD} = 3.0 V, –40 to +85 °C unless otherwise specified.

Parameter	Test Condition	Min	Typ	Max	Unit
Linearity		—	± 0.5	—	°C
Slope		—	2.87	—	mV/°C
Slope Error*		—	±120	—	µV/°C
Offset	Temp = 0 °C	—	764	—	mV
Offset Error*	Temp = 0 °C	—	±15	—	mV
Note: Represents one standard deviation from the mean.					

Table 5.12. Voltage Reference Electrical Characteristics

V_{DD} = 3.0 V; –40 to +85 °C unless otherwise specified.

Parameter	Test Condition	Min	Typ	Max	Unit
Internal Reference (REFBE = 1)					
Output Voltage	25 °C ambient	2.38	2.42	2.46	V
VREF Short-Circuit Current		—	—	8	mA
VREF Temperature Coefficient		—	35	—	ppm/°C
Load Regulation	Load = 0 to 200 µA to GND	—	1.5	—	ppm/µA
VREF Turn-on Time 1	4.7 µF tantalum, 0.1 µF ceramic bypass	—	3	—	ms
VREF Turn-on Time 2	0.1 µF ceramic bypass	—	100	—	µs
Power Supply Rejection		—	140	—	ppm/V
External Reference (REFBE = 0)					
Input Voltage Range		1	—	V_{DD}	V
Input Current	Sample Rate = 500 ksps; VREF = 3.0 V	—	9	—	µA
Power Specifications					
Supply Current		—	75	—	µA

Table 5.13. Comparator Electrical Characteristics
V_{DD} = 3.0 V, –40 to +85 °C unless otherwise noted.

Parameter	Test Condition	Min	Typ	Max	Unit
Response Time: Mode 0, Vcm* = 1.5 V	CP0+ – CP0– = 100 mV	—	100	—	ns
	CP0+ – CP0– = –100 mV	—	250	—	ns
Response Time: Mode 1, Vcm* = 1.5 V	CP0+ – CP0– = 100 mV	—	175	—	ns
	CP0+ – CP0– = –100 mV	—	500	—	ns
Response Time: Mode 2, Vcm* = 1.5 V	CP0+ – CP0– = 100 mV	—	320	—	ns
	CP0+ – CP0– = –100 mV	—	1100	—	ns
Response Time: Mode 3, Vcm* = 1.5 V	CP0+ – CP0– = 100 mV	—	1050	—	ns
	CP0+ – CP0– = –100 mV	—	5200	—	ns
Common-Mode Rejection Ratio		—	1.5	4	mV/V
Positive Hysteresis 1	CP0HYP1–0 = 00	—	0	1	mV
Positive Hysteresis 2	CP0HYP1–0 = 01	2	5	10	mV
Positive Hysteresis 3	CP0HYP1–0 = 10	7	10	20	mV
Positive Hysteresis 4	CP0HYP1–0 = 11	15	20	30	mV
Negative Hysteresis 1	CP0HYN1–0 = 00	—	0	1	mV
Negative Hysteresis 2	CP0HYN1–0 = 01	2	5	10	mV
Negative Hysteresis 3	CP0HYN1–0 = 10	7	10	20	mV
Negative Hysteresis 4	CP0HYN1–0 = 11	15	20	30	mV
Inverting or Non-Inverting Input Voltage Range		–0.25	—	V_{DD} + 0.25	V
Input Capacitance		—	4	—	pF
Input Bias Current		—	0.001	—	nA
Input Offset Voltage		–10	—	+10	mV
Power Supply					
Power Supply Rejection		—	0.1	—	mV/V
Power-up Time		—	10	—	µs
Supply Current at DC	Mode 0	—	20	—	µA
	Mode 1	—	10	—	µA
	Mode 2	—	4	—	µA
	Mode 3	—	1	—	µA

Note: Vcm is the common-mode voltage on CP0+ and CP0–.

6. 10-Bit ADC

ADC0 on the C8051F388/9/A/B is a 500 ksps, 10-bit successive-approximation-register (SAR) ADC with integrated track-and-hold, and a programmable window detector. The ADC is fully configurable under software control via Special Function Registers. The ADC may be configured to measure various different signals using the analog multiplexer described in Section “6.5. ADC0 Analog Multiplexer” on page 55. The voltage reference for the ADC is selected as described in Section “7. Voltage Reference Options” on page 58. The ADC0 subsystem is enabled only when the AD0EN bit in the ADC0 Control register (ADC0CN) is set to logic 1. The ADC0 subsystem is in low power shutdown when this bit is logic 0.

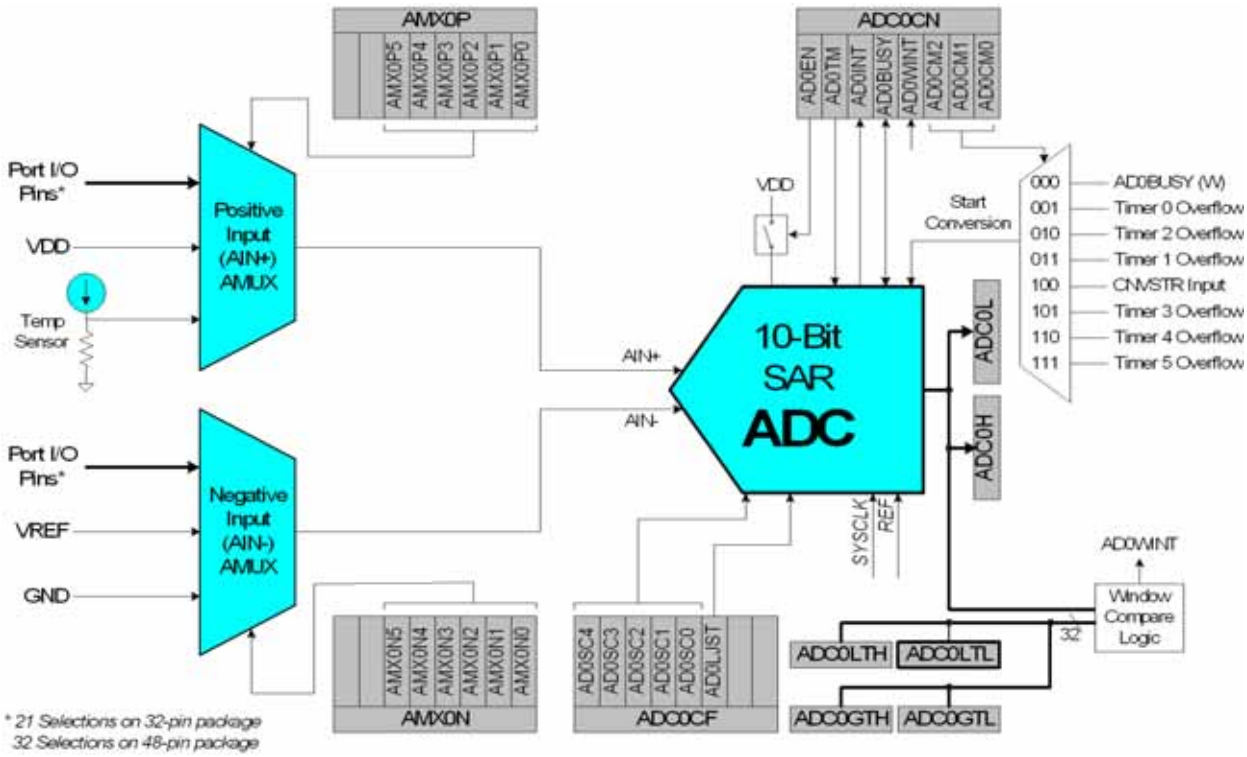

Figure 6.1. ADC0 Functional Block Diagram

6.1. Output Code Formatting

The conversion code format differs between Single-ended and Differential modes. The registers ADC0H and ADC0L contain the high and low bytes of the output conversion code from the ADC at the completion of each conversion. Data can be right-justified or left-justified, depending on the setting of the AD0LJST bit (ADC0CN.0). When in Single-ended Mode, conversion codes are represented as 10-bit unsigned integers. Inputs are measured from 0 to VREF x 1023/1024. Example codes are shown below for both right-justified and left-justified data. Unused bits in the ADC0H and ADC0L registers are set to 0.

Input Voltage (Single-Ended)	**Right-Justified ADC0H:ADC0L (AD0LJST = 0)**	**Left-Justified ADC0H:ADC0L (AD0LJST = 1)**
VREF x 1023/1024	0x03FF	0xFFC0
VREF x 512/1024	0x0200	0x8000
VREF x 256/1024	0x0100	0x4000
0	0x0000	0x0000

When in Differential Mode, conversion codes are represented as 10-bit signed 2s complement numbers. Inputs are measured from –VREF to VREF x 511/512. Example codes are shown below for both right-justified and left-justified data. For right-justified data, the unused MSBs of ADC0H are a sign-extension of the data word. For left-justified data, the unused LSBs in the ADC0L register are set to 0.

Input Voltage (Differential)	**Right-Justified ADC0H:ADC0L (AD0LJST = 0)**	**Left-Justified ADC0H:ADC0L (AD0LJST = 1)**
VREF x 511/512	0x01FF	0x7FC0
VREF x 256/512	0x0100	0x4000
0	0x0000	0x0000
–VREF x 256/512	0xFF00	0xC000
–VREF	0xFE00	0x8000

6.2. Temperature Sensor

The typical temperature sensor transfer function is shown in Figure 6.2. The output voltage (V_{TEMP}) is the positive ADC input when the temperature sensor is selected by bits AMX0P5-0 in register AMX0P.

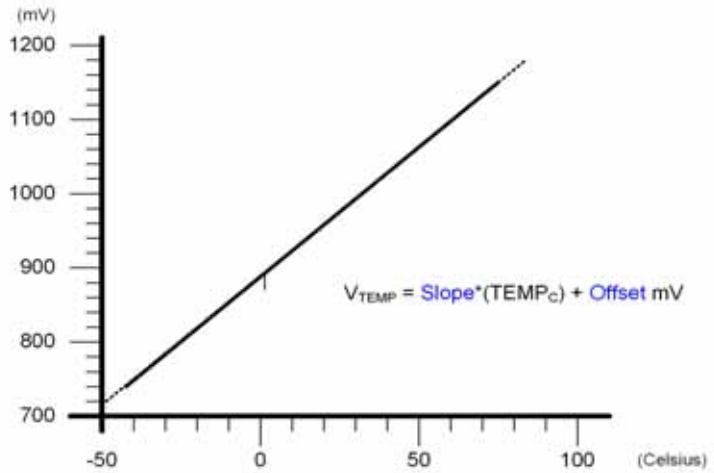

Figure 6.2. Typical Temperature Sensor Transfer Function

The uncalibrated temperature sensor output is extremely linear and suitable for relative temperature measurements (see Table 5.10, “ADC0 Electrical Characteristics,” on page 39 for linearity specifications). For absolute temperature measurements, gain and/or offset calibration is recommended. Typically a 1-point calibration includes the following steps:

Step 1. Control/measure the ambient temperature (this temperature must be known).
Step 2. Power the device, and delay for a few seconds to allow for self-heating.
Step 3. Perform an ADC conversion with the temperature sensor selected as the positive input and GND selected as the negative input.
Step 4. Calculate the offset and/or gain characteristics, and store these values in non-volatile memory for use with subsequent temperature sensor measurements.

Figure 6.3 shows the typical temperature sensor error assuming a 1-point calibration at 25 °C. **Note that parameters which affect ADC measurement, in particular the voltage reference value, will also affect temperature measurement.**

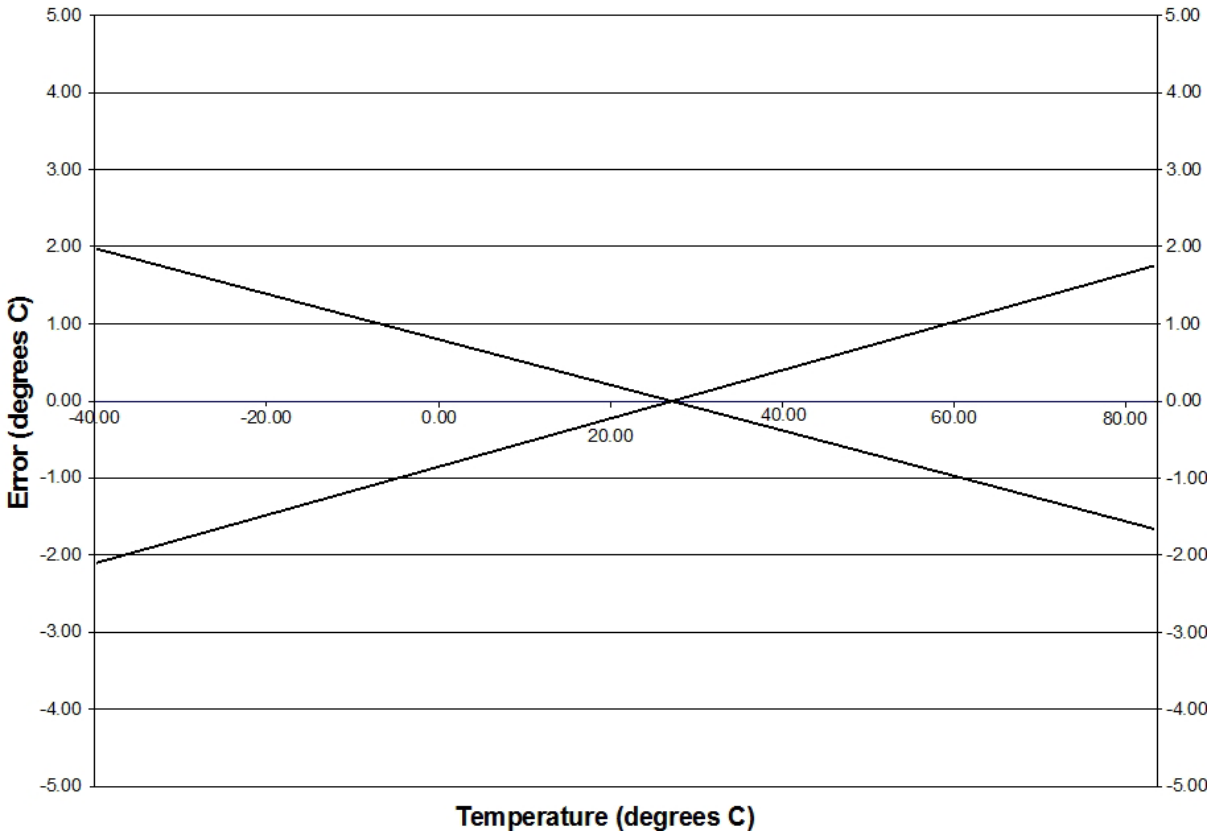

Figure 6.3. Temperature Sensor Error with 1-Point Calibration

6.3. Modes of Operation

ADC0 has a maximum conversion speed of 500 ksps. The ADC0 conversion clock is a divided version of the system clock, determined by the AD0SC bits in the ADC0CF register.

6.3.1. Starting a Conversion

A conversion can be initiated in one of several ways, depending on the programmed states of the ADC0 Start of Conversion Mode bits (AD0CM2–0) in register ADC0CN. Conversions may be initiated by one of the following:

1. Writing a 1 to the AD0BUSY bit of register ADC0CN
2. A Timer 0 overflow (i.e., timed continuous conversions)
3. A Timer 2 overflow
4. A Timer 1 overflow
5. A rising edge on the CNVSTR input signal
6. A Timer 3 overflow
7. A Timer 4 overflow
8. A Timer 5 overflow

Writing a 1 to AD0BUSY provides software control of ADC0 whereby conversions are performed "on-demand". During conversion, the AD0BUSY bit is set to logic 1 and reset to logic 0 when the conversion is complete. The falling edge of AD0BUSY triggers an interrupt (when enabled) and sets the ADC0 interrupt flag (AD0INT). Note: When polling for ADC conversion completions, the ADC0 interrupt flag (AD0INT) should be used. Converted data is available in the ADC0 data registers, ADC0H:ADC0L, when bit AD0INT is logic 1. Note that when Timer 2, 3, 4, or 5 overflows are used as the conversion source, Low Byte overflows are used if the timer is in 8-bit mode; High byte overflows are used if the timer is in 16-bit mode. See Section “25. Timers” on page 224 for timer configuration.

Important Note About Using CNVSTR: The CNVSTR input pin also functions as a Port I/O pin. When the CNVSTR input is used as the ADC0 conversion source, the associated pin should be skipped by the Digital Crossbar. See Section “20. Port Input/Output” on page 147 for details on Port I/O configuration.

6.3.2. Tracking Modes

The AD0TM bit in register ADC0CN controls the ADC0 track-and-hold mode. In its default state, the ADC0 input is continuously tracked, except when a conversion is in progress. When the AD0TM bit is logic 1, ADC0 operates in low-power track-and-hold mode. In this mode, each conversion is preceded by a tracking period of 3 SAR clocks (after the start-of-conversion signal). When the CNVSTR signal is used to initiate conversions in low-power tracking mode, ADC0 tracks only when CNVSTR is low; conversion begins on the rising edge of CNVSTR. See Figure 6.4 for track and convert timing details. Tracking can also be disabled (shutdown) when the device is in low power standby or sleep modes. Low-power track-and-hold mode is also useful when AMUX settings are frequently changed, due to the settling time requirements described in Section “6.3.3. Settling Time Requirements” on page 48.

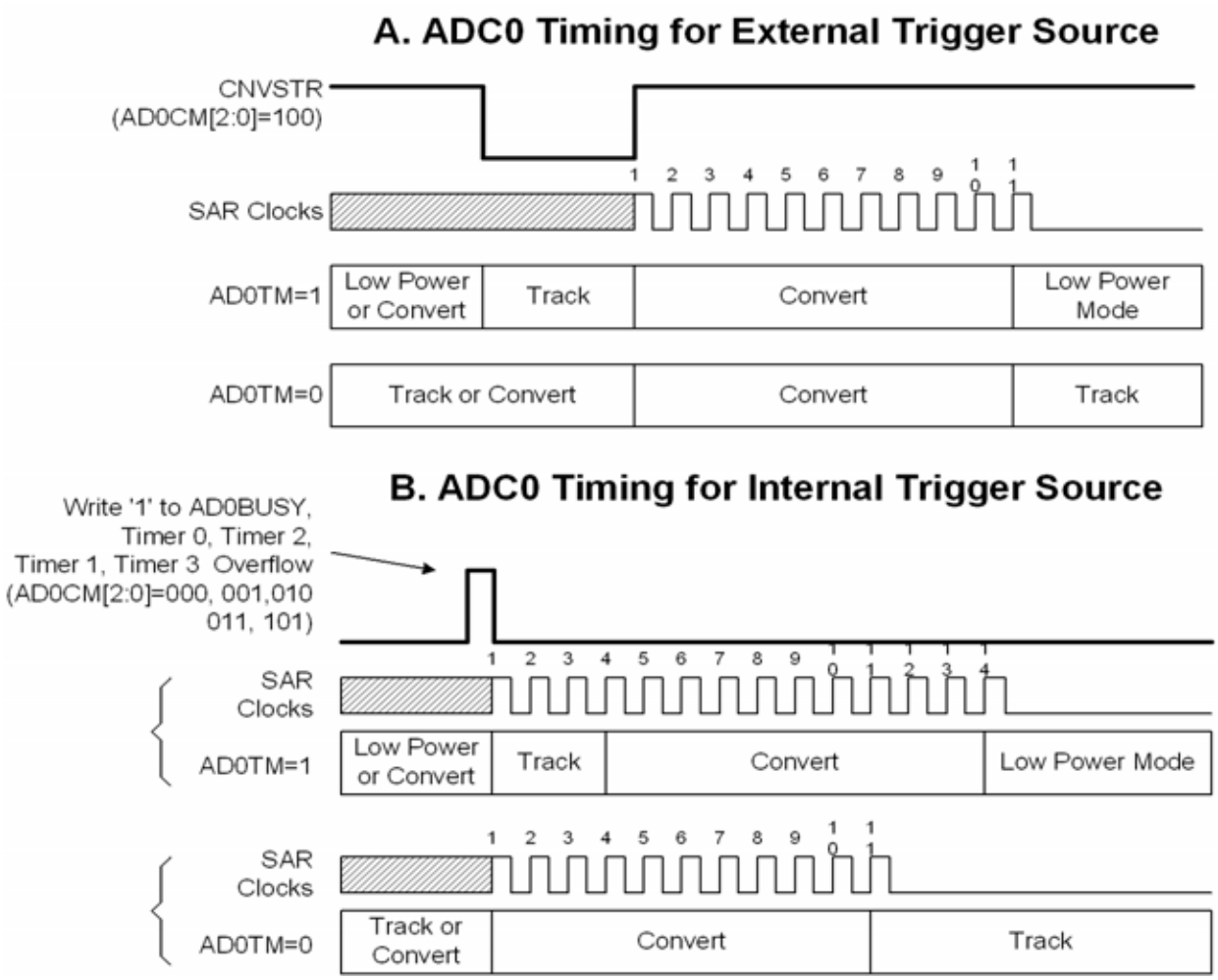

Figure 6.4. 10-Bit ADC Track and Conversion Example Timing

6.3.3. Settling Time Requirements

A minimum tracking time is required before each conversion to ensure that an accurate conversion is performed. This tracking time is determined by the AMUX0 resistance, the ADC0 sampling capacitance, any external source resistance, and the accuracy required for the conversion. Note that in low-power tracking mode, three SAR clocks are used for tracking at the start of every conversion. For most applications, these three SAR clocks will meet the minimum tracking time requirements.

Figure 6.5 shows the equivalent ADC0 input circuit. The required ADC0 settling time for a given settling accuracy (SA) may be approximated by Equation 6.1. See Table 5.10 for ADC0 minimum settling time requirements as well as the mux impedance and sampling capacitor values.

$$t = \ln\left(\frac{2^n}{SA}\right) \times R_{TOTAL} C_{SAMPLE}$$

Equation 6.1. ADC0 Settling Time Requirements

Where:
SA is the settling accuracy, given as a fraction of an LSB (for example, 0.25 to settle within 1/4 LSB)
t is the required settling time in seconds
R_{TOTAL} is the sum of the AMUX0 resistance and any external source resistance.
n is the ADC resolution in bits (10).

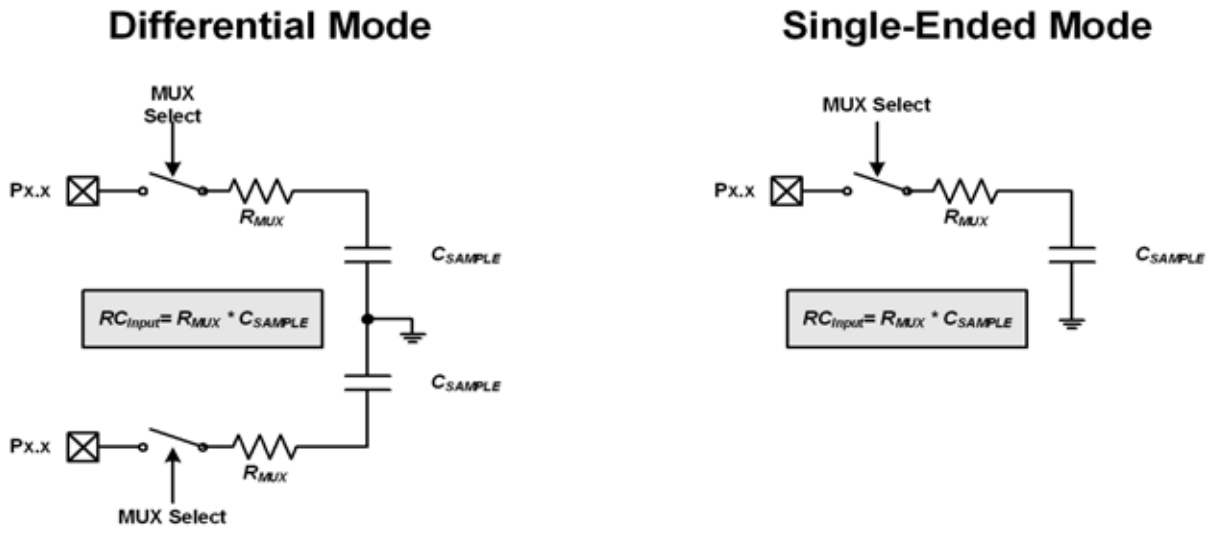

Figure 6.5. ADC0 Equivalent Input Circuits

SFR Definition 6.1. ADC0CF: ADC0 Configuration

Bit	7	6	5	4	3	2	1	0
Name	AD0SC[4:0]					AD0LJST	Reserved	
Type	R/W					R/W	R/W	
Reset	1	1	1	1	1	0	0	0

SFR Address = 0xBC; SFR Page = All Pages

Bit	Name	Function
7:3	AD0SC[4:0]	**ADC0 SAR Conversion Clock Period Bits.** SAR Conversion clock is derived from system clock by the following equation, where *AD0SC* refers to the 5-bit value held in bits AD0SC4–0. SAR Conversion clock requirements are given in the ADC specification table. $AD0SC = \frac{SYSCLK}{CLK_{SAR}} - 1$ **Note:** If the Memory Power Controller is enabled (MPCE = '1'), AD0SC must be set to at least "00001" for proper ADC operation.
2	AD0LJST	**ADC0 Left Justify Select.** 0: Data in ADC0H:ADC0L registers are right-justified. 1: Data in ADC0H:ADC0L registers are left-justified. **Note:** The AD0LJST bit is only valid for 10-bit mode (AD08BE = 0).
1:0	Reserved	Must Write 00b.

SFR Definition 6.2. ADC0H: ADC0 Data Word MSB

Bit	7	6	5	4	3	2	1	0
Name	ADC0H[7:0]							
Type	R/W							
Reset	0	0	0	0	0	0	0	0

SFR Address = 0xBE; SFR Page = All Pages

Bit	Name	Function
7:0	ADC0H[7:0]	**ADC0 Data Word High-Order Bits.** For AD0LJST = 0: Bits 7–2 will read 000000b. Bits 1–0 are the upper 2 bits of the 10-bit ADC0 Data Word. For AD0LJST = 1: Bits 7–0 are the most-significant bits of the 10-bit ADC0 Data Word.

SFR Definition 6.3. ADC0L: ADC0 Data Word LSB

Bit	7	6	5	4	3	2	1	0
Name	ADC0L[7:0]							
Type	R/W							
Reset	0	0	0	0	0	0	0	0

SFR Address = 0xBD; SFR Page = All Pages

Bit	Name	Function
7:0	ADC0L[7:0]	**ADC0 Data Word Low-Order Bits.** For AD0LJST = 0: Bits 7–0 are the lower 8 bits of the 10-bit Data Word. For AD0LJST = 1: Bits 7–6 are the lower 2 bits of the 10-bit Data Word. Bits 5–0 will read 000000b.

SFR Definition 6.4. ADC0CN: ADC0 Control

Bit	7	6	5	4	3	2	1	0
Name	AD0EN	AD0TM	AD0INT	AD0BUSY	AD0WINT	AD0CM[2:0]		
Type	R/W	R/W	R/W	R/W	R/W	R/W		
Reset	0	0	0	0	0	0	0	0

SFR Address = 0xE8; SFR Page = All Pages; Bit-Addressable

Bit	Name	Function
7	AD0EN	**ADC0 Enable Bit.** 0: ADC0 Disabled. ADC0 is in low-power shutdown. 1: ADC0 Enabled. ADC0 is active and ready for data conversions.
6	AD0TM	**ADC0 Track Mode Bit.** 0: Normal Track Mode: When ADC0 is enabled, tracking is continuous unless a conversion is in progress. Conversion begins immediately on start-of-conversion event, as defined by AD0CM[2:0]. 1: Delayed Track Mode: When ADC0 is enabled, input is tracked when a conversion is not in progress. A start-of-conversion signal initiates three SAR clocks of additional tracking, and then begins the conversion. Note that there is not a tracking delay when CNVSTR is used (AD0CM[2:0] = 100).
5	AD0INT	**ADC0 Conversion Complete Interrupt Flag.** 0: ADC0 has not completed a data conversion since AD0INT was last cleared. 1: ADC0 has completed a data conversion.
4	AD0BUSY	**ADC0 Busy Bit.** **Read:** 0: ADC0 conversion is not in progress. 1: ADC0 conversion is in progress. **Write:** 0: No Effect. 1: Initiates ADC0 Conversion if AD0CM[2:0] = 000b
3	AD0WINT	**ADC0 Window Compare Interrupt Flag.** 0: ADC0 Window Comparison Data match has not occurred since this flag was last cleared. 1: ADC0 Window Comparison Data match has occurred.
2:0	AD0CM[2:0]	**ADC0 Start of Conversion Mode Select.** 000: ADC0 start-of-conversion source is write of 1 to AD0BUSY. 001: ADC0 start-of-conversion source is overflow of Timer 0. 010: ADC0 start-of-conversion source is overflow of Timer 2. 011: ADC0 start-of-conversion source is overflow of Timer 1. 100: ADC0 start-of-conversion source is rising edge of external CNVSTR. 101: ADC0 start-of-conversion source is overflow of Timer 3. 110: ADC0 start-of-conversion source is overflow of Timer 4. 111: ADC0 start-of-conversion source is overflow of Timer 5.

6.4. Programmable Window Detector

The ADC Programmable Window Detector continuously compares the ADC0 output registers to user-programmed limits, and notifies the system when a desired condition is detected. This is especially effective in an interrupt-driven system, saving code space and CPU bandwidth while delivering faster system response times. The window detector interrupt flag (AD0WINT in register ADC0CN) can also be used in polled mode. The ADC0 Greater-Than (ADC0GTH, ADC0GTL) and Less-Than (ADC0LTH, ADC0LTL) registers hold the comparison values. The window detector flag can be programmed to indicate when measured data is inside or outside of the user-programmed limits, depending on the contents of the ADC0 Less-Than and ADC0 Greater-Than registers.

SFR Definition 6.5. ADC0GTH: ADC0 Greater-Than Data High Byte

Bit	7	6	5	4	3	2	1	0
Name	ADC0GTH[7:0]							
Type	R/W							
Reset	1	1	1	1	1	1	1	1

SFR Address = 0xC4; SFR Page = All Pages

Bit	Name	Function
7:0	ADC0GTH[7:0]	**ADC0 Greater-Than Data Word High-Order Bits.**

SFR Definition 6.6. ADC0GTL: ADC0 Greater-Than Data Low Byte

Bit	7	6	5	4	3	2	1	0
Name	ADC0GTL[7:0]							
Type	R/W							
Reset	1	1	1	1	1	1	1	1

SFR Address = 0xC3; SFR Page = All Pages

Bit	Name	Function
7:0	ADC0GTL[7:0]	**ADC0 Greater-Than Data Word Low-Order Bits.**

SFR Definition 6.7. ADC0LTH: ADC0 Less-Than Data High Byte

Bit	7	6	5	4	3	2	1	0
Name	ADC0LTH[7:0]							
Type	R/W							
Reset	0	0	0	0	0	0	0	0

SFR Address = 0xC6; SFR Page = All Pages

Bit	Name	Function
7:0	ADC0LTH[7:0]	**ADC0 Less-Than Data Word High-Order Bits.**

SFR Definition 6.8. ADC0LTL: ADC0 Less-Than Data Low Byte

Bit	7	6	5	4	3	2	1	0
Name	ADC0LTL[7:0]							
Type	R/W							
Reset	0	0	0	0	0	0	0	0

SFR Address = 0xC5; SFR Page = All Pages

Bit	Name	Function
7:0	ADC0LTL[7:0]	**ADC0 Less-Than Data Word Low-Order Bits.**

6.4.1. Window Detector Example

Figure 6.6 shows two example window comparisons for right-justified, single-ended data, with ADC0LTH:ADC0LTL = 0x0080 (128d) and ADC0GTH:ADC0GTL = 0x0040 (64d). The input voltage can range from 0 to VREF x (1023/1024) with respect to GND, and is represented by a 10-bit unsigned integer value. In the left example, an AD0WINT interrupt will be generated if the ADC0 conversion word (ADC0H:ADC0L) is within the range defined by ADC0GTH:ADC0GTL and ADC0LTH:ADC0LTL (if 0x0040 < ADC0H:ADC0L < 0x0080). In the right example, and AD0WINT interrupt will be generated if the ADC0 conversion word is outside of the range defined by the ADC0GT and ADC0LT registers (if ADC0H:ADC0L < 0x0040 or ADC0H:ADC0L > 0x0080). Figure 6.7 shows an example using left-justified data with the same comparison values.

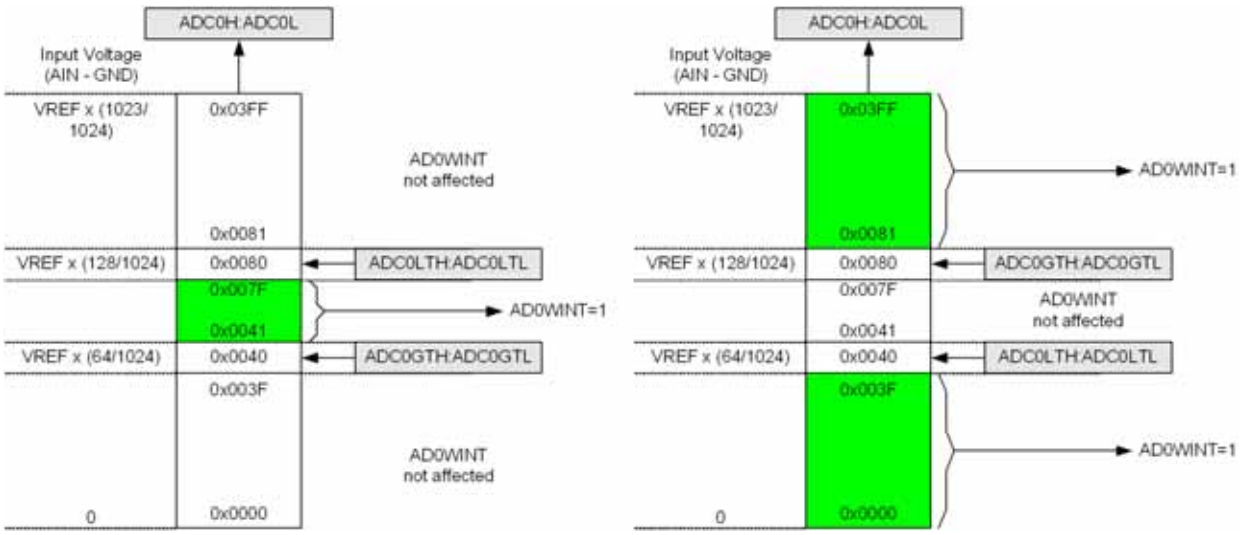

Figure 6.6. ADC Window Compare Example: Right-Justified Data

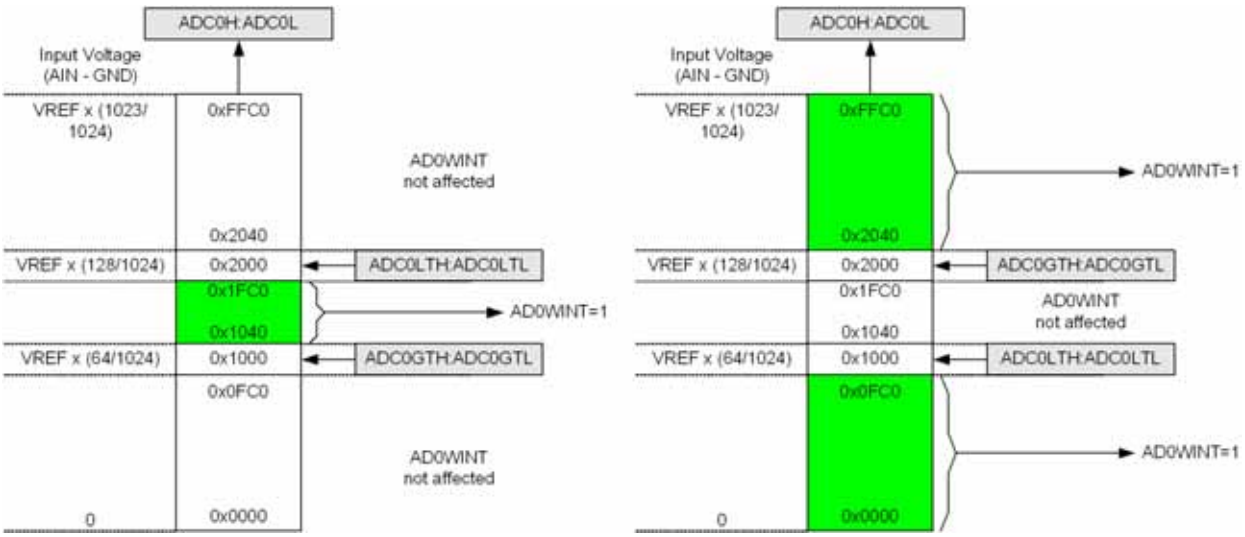

Figure 6.7. ADC Window Compare Example: Left-Justified Data

6.5. ADC0 Analog Multiplexer

AMUX0 selects the positive and negative inputs to the ADC. The positive input (AIN+) can be connected to individual Port pins, the on-chip temperature sensor, or the positive power supply (V_{DD}). The negative input (AIN-) can be connected to individual Port pins, VREF, or GND. When GND is selected as the negative input, ADC0 operates in Single-ended Mode; at all other times, ADC0 operates in Differential Mode. The ADC0 input channels are selected in the AMX0P and AMX0N registers as described in SFR Definition 6.9 and SFR Definition 6.10.

Important Note About ADC0 Input Configuration: Port pins selected as ADC0 inputs should be configured as analog inputs, and should be skipped by the Digital Crossbar. To configure a Port pin for analog input, set to 0 the corresponding bit in register PnMDIN. To force the Crossbar to skip a Port pin, set to 1 the corresponding bit in register PnSKIP. See Section “20. Port Input/Output” on page 147 for more Port I/O configuration details.

SFR Definition 6.9. AMX0P: AMUX0 Positive Channel Select

Bit	7	6	5	4	3	2	1	0
Name			AMX0P[5:0]					
Type	R	R	R/W					
Reset	0	0	0	0	0	0	0	0

SFR Address = 0xBB; SFR Page = All Pages

Bit	Name	Function					
7:6	Unused	Read = 00b; Write = don't care.					
5:0	AMX0P[5:0]	**AMUX0 Positive Input Selection.**					
		AMX0P	32-pin Packages	48-pin Packages	AMX0P	32-pin Packages	48-pin Packages
		000000:	P1.0	P2.0	010010:	P0.1	P0.4
		000001:	P1.1	P2.1	010011:	P0.4	P1.1
		000010:	P1.2	P2.2	010100:	P0.5	P1.2
		000011:	P1.3	P2.3	010101:	Reserved	P1.0
		000100:	P1.4	P2.5	010110:	Reserved	P1.3
		000101:	P1.5	P2.6	010111:	Reserved	P1.6
		000110:	P1.6	P3.0	011000:	Reserved	P1.7
		000111:	P1.7	P3.1	011001:	Reserved	P2.4
		001000:	P2.0	P3.4	011010:	Reserved	P2.7
		001001:	P2.1	P3.5	011011:	Reserved	P3.2
		001010:	P2.2	P3.7	011100:	Reserved	P3.3
		001011:	P2.3	P4.0	011101:	Reserved	P3.6
		001100:	P2.4	P4.3	011110:	Temp Sensor	Temp Sensor
		001101:	P2.5	P4.4	011111:	V_{DD}	V_{DD}
		001110:	P2.6	P4.5	100000:	Reserved	P4.1
		001111:	P2.7	P4.6	100001:	Reserved	P4.2
		010000:	P3.0	Reserved	100010:	Reserved	P4.7
		010001:	P0.0	P0.3	100011 - 111111:	Reserved	Reserved

SFR Definition 6.10. AMX0N: AMUX0 Negative Channel Select

Bit	7	6	5	4	3	2	1	0
Name			AMX0N[5:0]					
Type	R	R	R/W					
Reset	0	0	0	0	0	0	0	0

SFR Address = 0xBA; SFR Page = All Pages

Bit	Name	Function
7:6	Unused	Read = 00b; Write = don't care.
5:0	AMX0N[5:0]	**AMUX0 Negative Input Selection.**

AMX0N	32-pin Packages	48-pin Packages	AMX0N	32-pin Packages	48-pin Packages
000000:	P1.0	P2.0	010010:	P0.1	P0.4
000001:	P1.1	P2.1	010011:	P0.4	P1.1
000010:	P1.2	P2.2	010100:	P0.5	P1.2
000011:	P1.3	P2.3	010101:	Reserved	P1.0
000100:	P1.4	P2.5	010110:	Reserved	P1.3
000101:	P1.5	P2.6	010111:	Reserved	P1.6
000110:	P1.6	P3.0	011000:	Reserved	P1.7
000111:	P1.7	P3.1	011001:	Reserved	P2.4
001000:	P2.0	P3.4	011010:	Reserved	P2.7
001001:	P2.1	P3.5	011011:	Reserved	P3.2
001010:	P2.2	P3.7	011100:	Reserved	P3.3
001011:	P2.3	P4.0	011101:	Reserved	P3.6
001100:	P2.4	P4.3	011110:	VREF	VREF
001101:	P2.5	P4.4	011111:	GND (Single-Ended Measurement)	GND (Single-Ended Measurement)
001110:	P2.6	P4.5	100000:	Reserved	P4.1
001111:	P2.7	P4.6	100001:	Reserved	P4.2
010000:	P3.0	Reserved	100010:	Reserved	P4.7
010001:	P0.0	P0.3	100011 - 111111:	Reserved	Reserved

7. Voltage Reference Options

The Voltage reference multiplexer for the ADC is configurable to use an externally connected voltage reference, the on-chip reference voltage generator routed to the VREF pin, the unregulated power supply voltage (V_{DD}), or the regulated 1.8 V internal supply (see Figure 7.1). The REFSL bit in the Reference Control register (REF0CN, SFR Definition 7.1) selects the reference source for the ADC. For an external source or the on-chip reference, REFSL should be set to 0 to select the VREF pin. To use V_{DD} as the reference source, REFSL should be set to 1. To override this selection and use the internal regulator as the reference source, the REGOVR bit can be set to 1.

The BIASE bit enables the internal voltage bias generator, which is used by many of the analog peripherals on the device. This bias is automatically enabled when any peripheral which requires it is enabled, and it does not need to be enabled manually. The bias generator may be enabled manually by writing a 1 to the BIASE bit in register REF0CN. The electrical specifications for the voltage reference circuit are given in Table 5.12.

The C8051F388/9/A/B devices also include an on-chip voltage reference circuit which consists of a 1.2 V, temperature stable bandgap voltage reference generator and a selectable-gain output buffer amplifier. The buffer is configured for 1x or 2x gain using the REFBGS bit in register REF0CN. On the 1x gain setting the output voltage is nominally 1.2 V, and on the 2x gain setting the output voltage is nominally 2.4 V. The on-chip voltage reference can be driven on the VREF pin by setting the REFBE bit in register REF0CN to a 1. The maximum load seen by the VREF pin must be less than 200 µA to GND. Bypass capacitors of 0.1 µF and 4.7 µF are recommended from the VREF pin to GND, and a minimum of 0.1uF is required. If the on-chip reference is not used, the REFBE bit should be cleared to 0. Electrical specifications for the on-chip voltage reference are given in Table 5.12.

Important Note about the VREF Pin: When using either an external voltage reference or the on-chip reference circuitry, the VREF pin should be configured as an analog pin and skipped by the Digital Crossbar. Refer to Section “20. Port Input/Output” on page 147 for the location of the VREF pin, as well as details of how to configure the pin in analog mode and to be skipped by the crossbar.

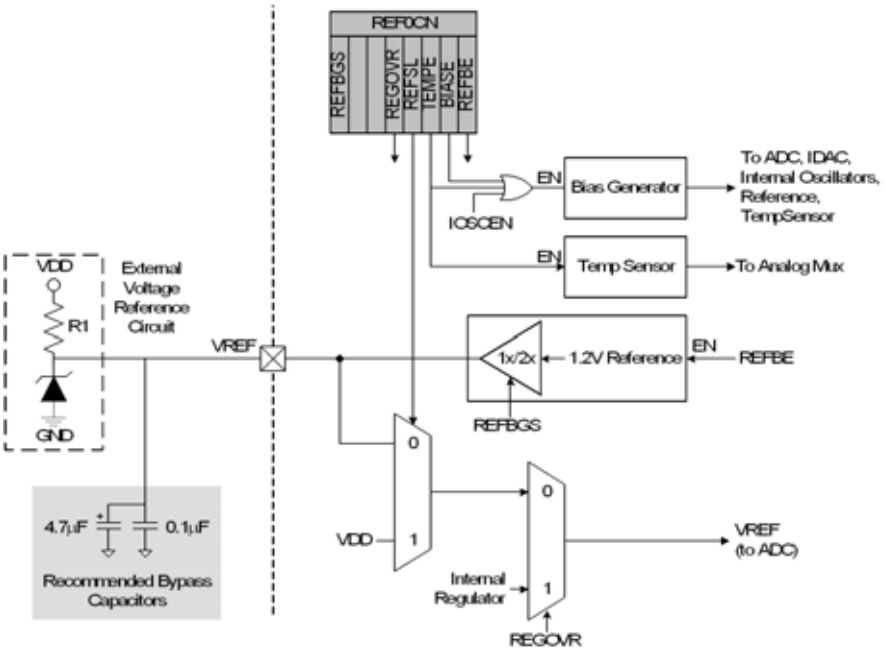

Figure 7.1. Voltage Reference Functional Block Diagram

SFR Definition 7.1. REF0CN: Reference Control

Bit	7	6	5	4	3	2	1	0
Name	REFBGS			REGOVR	REFSL	TEMPE	BIASE	REFBE
Type	R/W	R	R	R/W	R/W	R/W	R/W	R/W
Reset	0	0	0	0	0	0	0	0

SFR Address = 0xD1; SFR Page = All Pages

Bit	Name	Function
7	REFBGS	**Reference Buffer Gain Select.** This bit selects between 1x and 2x gain for the on-chip voltage reference buffer. 0: 2x Gain 1: 1x Gain
6:5	Unused	Read = 00b; Write = don't care.
4	REGOVR	**Regulator Reference Override.** This bit "overrides" the REFSL bit, and allows the internal regulator to be used as a reference source. 0: The voltage reference source is selected by the REFSL bit. 1: The internal regulator is used as the voltage reference.
3	REFSL	**Voltage Reference Select.** This bit selects the ADCs voltage reference. 0: V_{REF} pin used as voltage reference. 1: V_{DD} used as voltage reference.
2	TEMPE	**Temperature Sensor Enable Bit.** 0: Internal Temperature Sensor off. 1: Internal Temperature Sensor on.
1	BIASE	**Internal Analog Bias Generator Enable Bit.** 0: Internal Bias Generator off. 1: Internal Bias Generator on.
0	REFBE	**On-chip Reference Buffer Enable Bit.** 0: On-chip Reference Buffer off. 1: On-chip Reference Buffer on. Internal voltage reference driven on the V_{REF} pin.

8. Comparator0 and Comparator1

C8051F388/9/A/B devices include two on-chip programmable voltage comparators: Comparator0 is shown in Figure 8.1, Comparator1 is shown in Figure 8.2. The two comparators operate identically with the following exceptions: (1) Their input selections differ as described in Section “8.1. Comparator Multiplexers” on page 67; (2) Comparator0 can be used as a reset source.

The Comparators offer programmable response time and hysteresis, an analog input multiplexer, and two outputs that are optionally available at the Port pins: a synchronous “latched” output (CP0 or CP1), or an asynchronous “raw” output (CP0A or CP1A). The asynchronous signals are available even when the system clock is not active. This allows the Comparators to operate and generate an output with the device in STOP mode. When assigned to a Port pin, the Comparator outputs may be configured as open drain or push-pull (see Section “20.2. Port I/O Initialization” on page 152). Comparator0 may also be used as a reset source (see Section “17.5. Comparator0 Reset” on page 126).

The Comparator inputs are selected by the comparator input multiplexers, as detailed in Section “8.1. Comparator Multiplexers” on page 67.

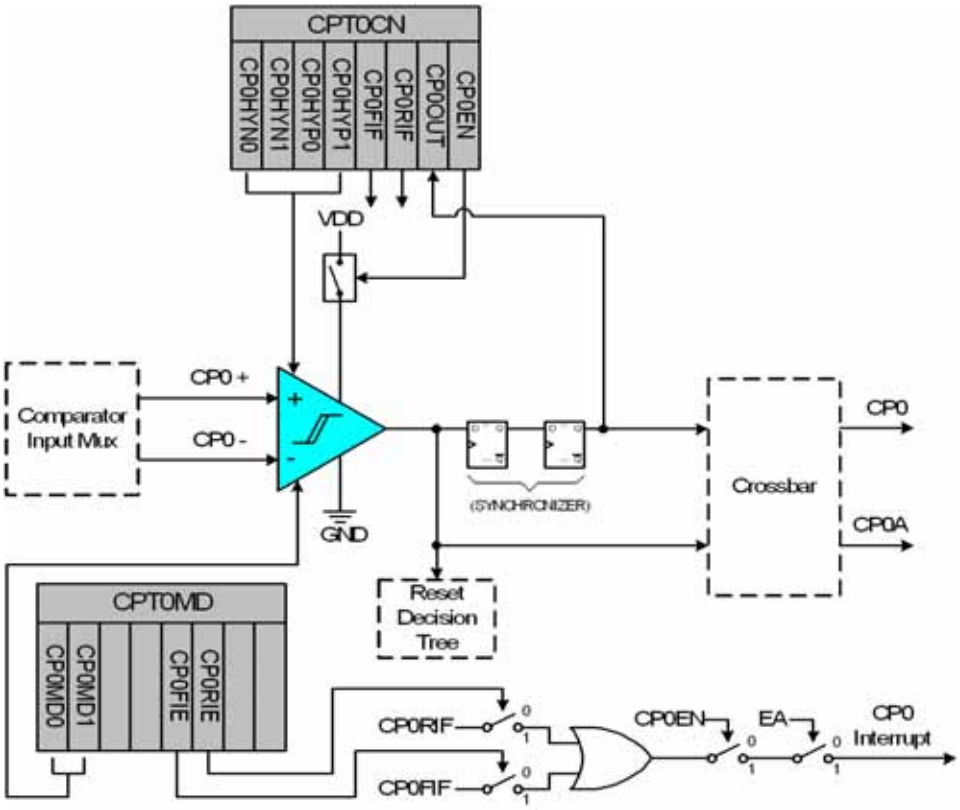

Figure 8.1. Comparator0 Functional Block Diagram

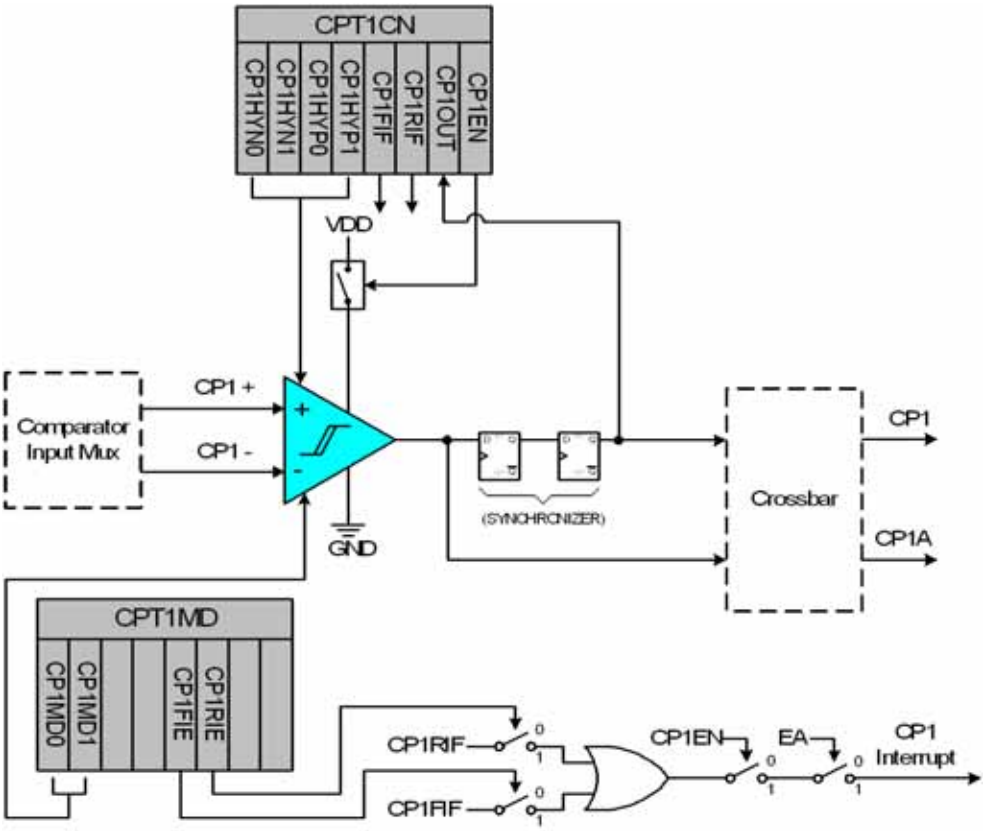

Figure 8.2. Comparator1 Functional Block Diagram

The Comparator output can be polled in software, used as an interrupt source, and/or routed to a Port pin. When routed to a Port pin, the Comparator output is available asynchronous or synchronous to the system clock; the asynchronous output is available even in STOP mode (with no system clock active). When disabled, the Comparator output (if assigned to a Port I/O pin via the Crossbar) defaults to the logic low state, and the power supply to the comparator is turned off. See Section “20.1. Priority Crossbar Decoder” on page 148 for details on configuring Comparator outputs via the digital Crossbar. Comparator inputs can be externally driven from –0.25 V to (V_{DD}) + 0.25 V without damage or upset. The complete Comparator electrical specifications are given in Section “5. Electrical Characteristics” on page 34.

The Comparator response time may be configured in software via the CPTnMD registers (see SFR Definition 8.2 and SFR Definition 8.4). Selecting a longer response time reduces the Comparator supply current.

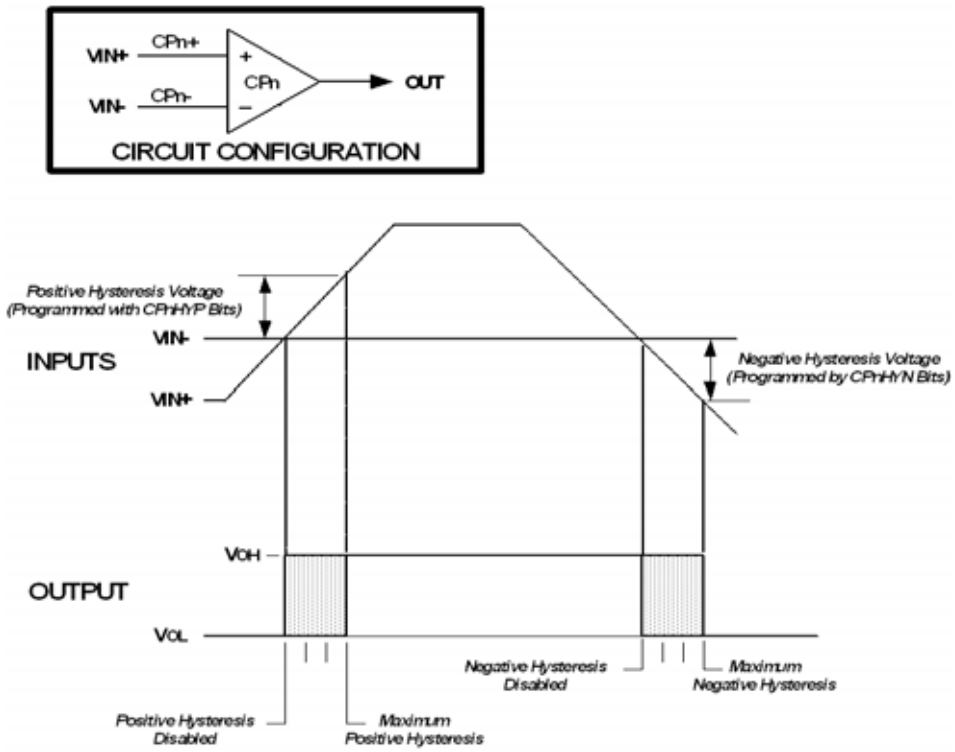

Figure 8.3. Comparator Hysteresis Plot

The Comparator hysteresis is software-programmable via its Comparator Control register CPTnCN (for n = 0 or 1). The user can program both the amount of hysteresis voltage (referred to the input voltage) and the positive and negative-going symmetry of this hysteresis around the threshold voltage.

The Comparator hysteresis is programmed using Bits 3–0 in the Comparator Control Register CPTnCN (shown in SFR Definition 8.1). The amount of negative hysteresis voltage is determined by the settings of the CPnHYN bits. Settings of 20, 10 or 5 mV of nominal negative hysteresis can be programmed, or negative hysteresis can be disabled. In a similar way, the amount of positive hysteresis is determined by the setting the CPnHYP bits.

Comparator interrupts can be generated on both rising-edge and falling-edge output transitions. (For Interrupt enable and priority control, see Section “16.1. MCU Interrupt Sources and Vectors” on page 113). The CPnFIF flag is set to logic 1 upon a Comparator falling-edge occurrence, and the CPnRIF flag is set to logic 1 upon the Comparator rising-edge occurrence. Once set, these bits remain set until cleared by software. The Comparator rising-edge interrupt mask is enabled by setting CPnRIE to a logic 1. The Comparator falling-edge interrupt mask is enabled by setting CPnFIE to a logic 1.

The output state of the Comparator can be obtained at any time by reading the CPnOUT bit. The Comparator is enabled by setting the CPnEN bit to logic 1, and is disabled by clearing this bit to logic 0.

Note that false rising edges and falling edges can be detected when the comparator is first powered on or if changes are made to the hysteresis or response time control bits. Therefore, it is recommended that the rising-edge and falling-edge flags be explicitly cleared to logic 0 a short time after the comparator is enabled or its mode bits have been changed.

SFR Definition 8.1. CPT0CN: Comparator0 Control

Bit	7	6	5	4	3	2	1	0
Name	CP0EN	CP0OUT	CP0RIF	CP0FIF	CP0HYP[1:0]		CP0HYN[1:0]	
Type	R/W	R	R/W	R/W	R/W		R/W	
Reset	0	0	0	0	0	0	0	0

SFR Address = 0x9B; SFR Page = All Pages

Bit	Name	Function
7	CP0EN	**Comparator0 Enable Bit.** 0: Comparator0 Disabled. 1: Comparator0 Enabled.
6	CP0OUT	**Comparator0 Output State Flag.** 0: Voltage on CP0+ < CP0–. 1: Voltage on CP0+ > CP0–.
5	CP0RIF	**Comparator0 Rising-Edge Flag. Must be cleared by software.** 0: No Comparator0 Rising Edge has occurred since this flag was last cleared. 1: Comparator0 Rising Edge has occurred.
4	CP0FIF	**Comparator0 Falling-Edge Flag. Must be cleared by software.** 0: No Comparator0 Falling-Edge has occurred since this flag was last cleared. 1: Comparator0 Falling-Edge has occurred.
3:2	CP0HYP[1:0]	**Comparator0 Positive Hysteresis Control Bits.** 00: Positive Hysteresis Disabled. 01: Positive Hysteresis = 5 mV. 10: Positive Hysteresis = 10 mV. 11: Positive Hysteresis = 20 mV.
1:0	CP0HYN[1:0]	**Comparator0 Negative Hysteresis Control Bits.** 00: Negative Hysteresis Disabled. 01: Negative Hysteresis = 5 mV. 10: Negative Hysteresis = 10 mV. 11: Negative Hysteresis = 20 mV.

SFR Definition 8.2. CPT0MD: Comparator0 Mode Selection

Bit	7	6	5	4	3	2	1	0
Name			CP0RIE	CP0FIE			CP0MD[1:0]	
Type	R	R	R/W	R/W	R	R	R/W	
Reset	0	0	0	0	0	0	1	0

SFR Address = 0x9D; SFR Page = All Pages

Bit	Name	Function
7:6	Unused	Read = 00b, Write = don't care.
5	CP0RIE	**Comparator0 Rising-Edge Interrupt Enable.** 0: Comparator0 Rising-edge interrupt disabled. 1: Comparator0 Rising-edge interrupt enabled.
4	CP0FIE	**Comparator0 Falling-Edge Interrupt Enable.** 0: Comparator0 Falling-edge interrupt disabled. 1: Comparator0 Falling-edge interrupt enabled.
3:2	Unused	Read = 00b, Write = don't care.
1:0	CP0MD[1:0]	**Comparator0 Mode Select.** These bits affect the response time and power consumption for Comparator0. 00: Mode 0 (Fastest Response Time, Highest Power Consumption) 01: Mode 1 10: Mode 2 11: Mode 3 (Slowest Response Time, Lowest Power Consumption)

SFR Definition 8.3. CPT1CN: Comparator1 Control

Bit	7	6	5	4	3	2	1	0
Name	CP1EN	CP1OUT	CP1RIF	CP1FIF	CP1HYP[1:0]		CP1HYN[1:0]	
Type	R/W	R	R/W	R/W	R/W		R/W	
Reset	0	0	0	0	0	0	0	0

SFR Address = 0x9A; SFR Page = All Pages

Bit	Name	Function
7	CP1EN	**Comparator1 Enable Bit.** 0: Comparator1 Disabled. 1: Comparator1 Enabled.
6	CP1OUT	**Comparator1 Output State Flag.** 0: Voltage on CP1+ < CP1–. 1: Voltage on CP1+ > CP1–.
5	CP1RIF	**Comparator1 Rising-Edge Flag. Must be cleared by software.** 0: No Comparator1 Rising Edge has occurred since this flag was last cleared. 1: Comparator1 Rising Edge has occurred.
4	CP1FIF	**Comparator1 Falling-Edge Flag. Must be cleared by software.** 0: No Comparator1 Falling-Edge has occurred since this flag was last cleared. 1: Comparator1 Falling-Edge has occurred.
3:2	CP1HYP[1:0]	**Comparator1 Positive Hysteresis Control Bits.** 00: Positive Hysteresis Disabled. 01: Positive Hysteresis = 5 mV. 10: Positive Hysteresis = 10 mV. 11: Positive Hysteresis = 20 mV.
1:0	CP1HYN[1:0]	**Comparator1 Negative Hysteresis Control Bits.** 00: Negative Hysteresis Disabled. 01: Negative Hysteresis = 5 mV. 10: Negative Hysteresis = 10 mV. 11: Negative Hysteresis = 20 mV.

SFR Definition 8.4. CPT1MD: Comparator1 Mode Selection

Bit	7	6	5	4	3	2	1	0
Name			CP1RIE	CP1FIE			CP1MD[1:0]	
Type	R	R	R/W	R/W	R	R	R/W	
Reset	0	0	0	0	0	0	1	0

SFR Address = 0x9C; SFR Page = All Pages

Bit	Name	Function
7:6	Unused	Read = 00b, Write = don't care.
5	CP1RIE	**Comparator1 Rising-Edge Interrupt Enable.** 0: Comparator1 Rising-edge interrupt disabled. 1: Comparator1 Rising-edge interrupt enabled.
4	CP1FIE	**Comparator1 Falling-Edge Interrupt Enable.** 0: Comparator1 Falling-edge interrupt disabled. 1: Comparator1 Falling-edge interrupt enabled.
3:2	Unused	Read = 00b, Write = don't care.
1:0	CP1MD[1:0]	**Comparator1 Mode Select.** These bits affect the response time and power consumption for Comparator1. 00: Mode 0 (Fastest Response Time, Highest Power Consumption) 01: Mode 1 10: Mode 2 11: Mode 3 (Slowest Response Time, Lowest Power Consumption)

8.1. Comparator Multiplexers

C8051F388/9/A/B devices include an analog input multiplexer to connect Port I/O pins to the comparator inputs. The Comparator inputs are selected in the CPTnMX registers (SFR Definition 8.5 and SFR Definition 8.6). The CMXnP2–CMXnP0 bits select the Comparator positive input; the CMXnN2–CMXnN0 bits select the Comparator negative input.

Important Note About Comparator Inputs: The Port pins selected as comparator inputs should be configured as analog inputs in their associated Port configuration register, and configured to be skipped by the Crossbar (for details on Port configuration, see Section “20.3. General Purpose Port I/O” on page 155).

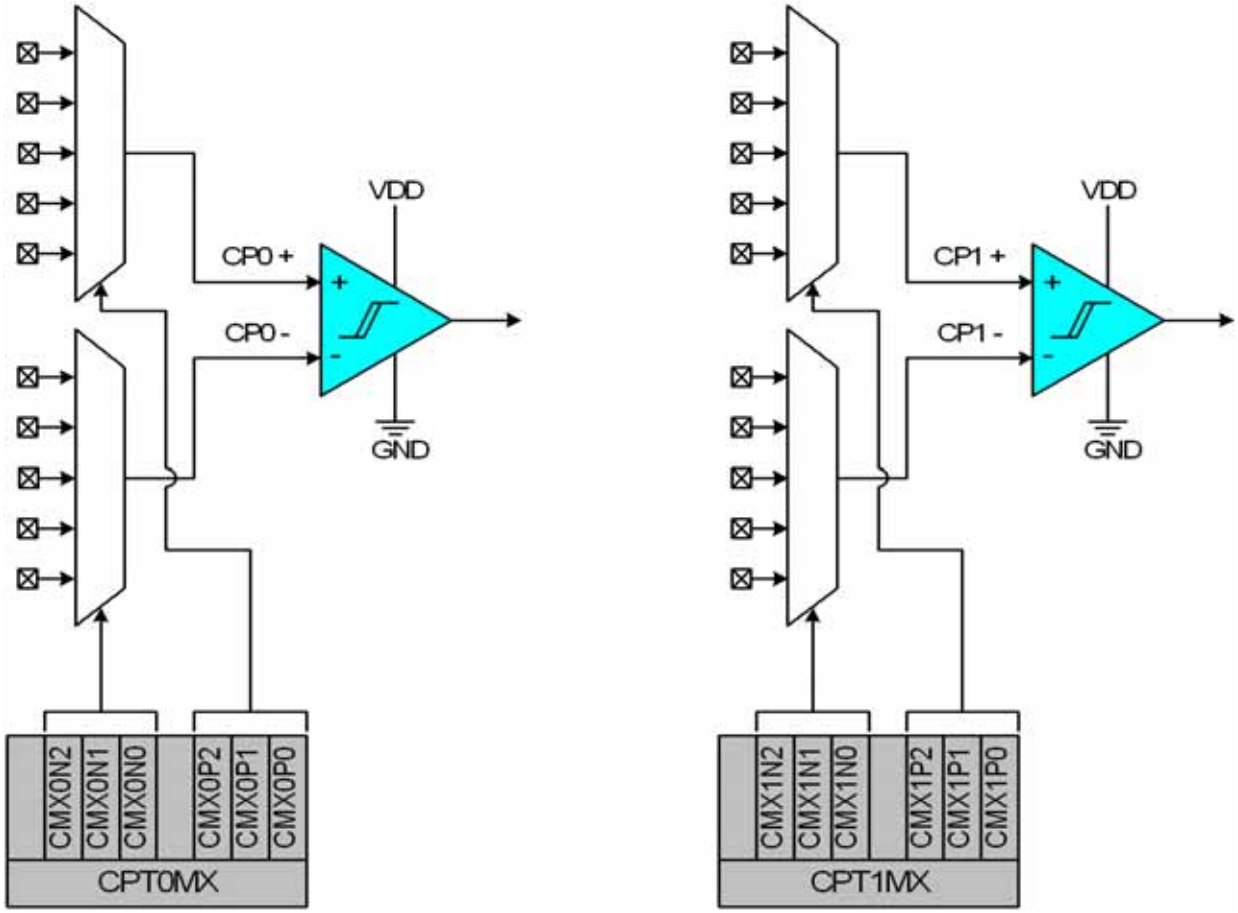

Figure 8.4. Comparator Input Multiplexer Block Diagram

SFR Definition 8.5. CPT0MX: Comparator0 MUX Selection

Bit	7	6	5	4	3	2	1	0
Name		CMX0N[2:0]				CMX0P[2:0]		
Type	R	R/W			R	R/W		
Reset	0	0	0	0	0	0	0	0

SFR Address = 0x9F; SFR Page = All Pages

Bit	Name	Function		
7	Unused	Read = 0b; Write = don't care.		
6:4	CMX0N[2:0]	**Comparator0 Negative Input MUX Selection.**		
		Selection	32-pin Package	48-pin Package
		000:	P1.1	P2.1
		001:	P1.5	P2.6
		010:	P2.1	P3.5
		011:	P2.5	P4.4
		100:	P0.1	P0.4
		101-111:	Reserved	Reserved
3	Unused	Read = 0b; Write = don't care.		
2:0	CMX0P[2:0]	**Comparator0 Positive Input MUX Selection.**		
		Selection	32-pin Package	48-pin Package
		000:	P1.0	P2.0
		001:	P1.4	P2.5
		010:	P2.0	P3.4
		011:	P2.4	P4.3
		100:	P0.0	P0.3
		101-111:	Reserved	Reserved

SFR Definition 8.6. CPT1MX: Comparator1 MUX Selection

Bit	7	6	5	4	3	2	1	0
Name		CMX1N[2:0]				CMX1P[2:0]		
Type	R	R/W			R	R/W		
Reset	0	0	0	0	0	0	0	0

SFR Address = 0x9E; SFR Page = All Pages

Bit	Name	Function		
7	Unused	Read = 0b; Write = don't care.		
6:4	CMX1N[2:0]	**Comparator1 Negative Input MUX Selection.**		
		Selection	32-pin Package	48-pin Package
		000:	P1.3	P2.3
		001:	P1.7	P3.1
		010:	P2.3	P4.0
		011:	Reserved	P4.6
		100:	P0.5	P1.2
		101-111:	Reserved	Reserved
3	Unused	Read = 0b; Write = don't care.		
2:0	CMX1P[2:0]	**Comparator1 Positive Input MUX Selection.**		
		Selection	32-pin Package	48-pin Package
		000:	P1.2	P2.2
		001:	P1.6	P3.0
		010:	P2.2	P3.7
		011:	Reserved	P4.5
		100:	P0.4	P1.1
		101-111:	Reserved	Reserved

9. Voltage Regulators (REG0 and REG1)

C8051F388/9/A/B devices include two internal voltage regulators: one regulates a voltage source on REGIN to 3.3 V (REG0), and the other regulates the internal core supply to 1.8 V from a V_{DD} supply of 1.8 to 3.6 V (REG1). When enabled, the REG0 output appears on the V_{DD} pin and can be used to power external devices. REG0 can be enabled/disabled by software using bit REG0DIS in register REG01CN (SFR Definition 9.1). REG1 has two power-saving modes built into the regulator to help reduce current consumption in low-power applications. These modes are accessed through the REG01CN register. Electrical characteristics for the on-chip regulators are specified in Table 5.5 on page 37.

9.1. Voltage Regulator (REG0)

See “4. Typical Connection Diagrams” for typical connection diagrams using the REG0 voltage regulator.

9.1.1. Regulator Mode Selection

REG0 offers a low power mode intended for use when the device is in suspend mode. In this low power mode, the REG0 output remains as specified; however the REG0 dynamic performance (response time) is degraded. See Table 5.5 for normal and low power mode supply current specifications. The REG0 mode selection is controlled via the REG0MD bit in register REG01CN.

9.1.2. External Interrupt 2 (INT2)

On C8051F388/9/A/B devices, the VBSTAT bit (register REG01CN) indicates the current logic level of the INT2 signal. If enabled, a INT2 interrupt will be generated when the INT2 signal has either a falling or rising edge. The INT2 interrupt is edge-sensitive, and has no associated interrupt pending flag. See Table 5.3 for INT2 input parameters.

9.2. Voltage Regulator (REG1)

Under default conditions, the internal REG1 regulator will remain on when the device enters STOP mode. This allows any enabled reset source to generate a reset for the device and bring the device out of STOP mode. For additional power savings, the STOPCF bit can be used to shut down the regulator and the internal power network of the device when the part enters STOP mode. When STOPCF is set to 1, the $\overline{RST}$ pin and a full power cycle of the device are the only methods of generating a reset.

REG1 offers an additional low power mode intended for use when the device is in suspend mode. This low power mode should not be used during normal operation or if the REG0 Voltage Regulator is disabled. See Table 5.5 for normal and low power mode supply current specifications. The REG1 mode selection is controlled via the REG1MD bit in register REG01CN.

Important Note: At least 12 clock instructions must occur after placing REG1 in low power mode before the Internal High Frequency Oscillator is Suspended (OSCICN.5 = 1b).

SFR Definition 9.1. REG01CN: Voltage Regulator Control

Bit	7	6	5	4	3	2	1	0
Name	REG0DIS	INT2STAT	Reserved	REG0MD	STOPCF	Reserved	REG1MD	Reserved
Type	R/W	R	R/W	R/W	R/W	R/W	R/W	R/W
Reset	0	0	0	0	0	0	0	0

SFR Address = 0xC9; SFR Page = All Pages

Bit	Name	Function
7	REG0DIS	**Voltage Regulator (REG0) Disable.** This bit enables or disables the REG0 Voltage Regulator. 0: Voltage Regulator Enabled. 1: Voltage Regulator Disabled.
6	INT2STAT	**INT2 Signal Status.** This bit indicates the status of the INT2 pin. 0: INT2 pin is currently low. 1: INT2 pin is currently high.
5	Reserved	Must Write 0b.
4	REG0MD	**Voltage Regulator (REG0) Mode Select.** This bit selects the Voltage Regulator mode for REG0. When REG0MD is set to 1, the REG0 voltage regulator operates in lower power (suspend) mode. 0: REG0 Voltage Regulator in normal mode. 1: REG0 Voltage Regulator in low power mode.
3	STOPCF	**Stop Mode Configuration (REG1).** This bit configures the REG1 regulator's behavior when the device enters STOP mode. 0: REG1 Regulator is still active in STOP mode. Any enabled reset source will reset the device. 1: REG1 Regulator is shut down in STOP mode. Only the $\overline{\text{RST}}$ pin or power cycle can reset the device.
2	Reserved	Must Write 0b.
1	REG1MD	**Voltage Regulator (REG1) Mode.** This bit selects the Voltage Regulator mode for REG1. When REG1MD is set to 1, the REG1 voltage regulator operates in lower power mode. 0: REG1 Voltage Regulator in normal mode. 1: REG1 Voltage Regulator in low power mode. This bit should not be set to '1' if the REG0 Voltage Regulator is disabled.
0	Reserved	Must Write 0b.

10. Power Management Modes

The C8051F388/9/A/B devices have three software programmable power management modes: Idle, Stop, and Suspend. Idle mode and stop mode are part of the standard 8051 architecture, while suspend mode is an enhanced power-saving mode implemented by the high-speed oscillator peripheral.

Idle mode halts the CPU while leaving the peripherals and clocks active. In stop mode, the CPU is halted, all interrupts and timers (except the Missing Clock Detector) are inactive, and the internal oscillator is stopped (analog peripherals remain in their selected states; the external oscillator is not affected). Suspend mode is similar to stop mode in that the internal oscillator is halted, but the device can wake on a transition of the INT2 pin. The CPU is not halted in suspend mode, so it can run on another oscillator, if desired. Since clocks are running in Idle mode, power consumption is dependent upon the system clock frequency and the number of peripherals left in active mode before entering Idle. Stop mode and suspend mode consume the least power because the majority of the device is shut down with no clocks active. SFR Definition 10.1 describes the Power Control Register (PCON) used to control the C8051F388/9/A/B's Stop and Idle power management modes. Suspend mode is controlled by the SUSPEND bit in the OSCICN register (SFR Definition 19.3).

Although the C8051F388/9/A/B has Idle, Stop, and suspend modes available, more control over the device power can be achieved by enabling/disabling individual peripherals as needed. Each analog peripheral can be disabled when not in use and placed in low power mode. Digital peripherals, such as timers or serial buses, draw little power when they are not in use. Turning off oscillators lowers power consumption considerably, at the expense of reduced functionality.

10.1. Idle Mode

Setting the Idle Mode Select bit (PCON.0) causes the hardware to halt the CPU and enter Idle mode as soon as the instruction that sets the bit completes execution. All internal registers and memory maintain their original data. All analog and digital peripherals can remain active during idle mode.

Idle mode is terminated when an enabled interrupt is asserted or a reset occurs. The assertion of an enabled interrupt will cause the Idle Mode Selection bit (PCON.0) to be cleared and the CPU to resume operation. The pending interrupt will be serviced and the next instruction to be executed after the return from interrupt (RETI) will be the instruction immediately following the one that set the Idle Mode Select bit. If Idle mode is terminated by an internal or external reset, the CIP-51 performs a normal reset sequence and begins program execution at address 0x0000.

Note: If the instruction following the write of the IDLE bit is a single-byte instruction and an interrupt occurs during the execution phase of the instruction that sets the IDLE bit, the CPU may not wake from Idle mode when a future interrupt occurs. Therefore, instructions that set the IDLE bit should be followed by an instruction that has two or more opcode bytes, for example:

```
// in 'C':
PCON |= 0x01;                    // set IDLE bit
PCON = PCON;                     // ... followed by a 3-cycle dummy instruction

; in assembly:
ORL PCON, #01h                   ; set IDLE bit
MOV PCON, PCON                   ; ... followed by a 3-cycle dummy instruction
```

If enabled, the Watchdog Timer (WDT) will eventually cause an internal watchdog reset and thereby terminate the Idle mode. This feature protects the system from an unintended permanent shutdown in the event of an inadvertent write to the PCON register. If this behavior is not desired, the WDT may be disabled by software prior to entering the Idle mode if the WDT was initially configured to allow this operation. This provides the opportunity for additional power savings, allowing the system to remain in the Idle mode indefinitely, waiting for an external stimulus to wake up the system. Refer to Section “17.6. PCA Watchdog Timer

Reset" on page 127 for more information on the use and configuration of the WDT.

10.2. Stop Mode

Setting the stop mode Select bit (PCON.1) causes the controller core to enter stop mode as soon as the instruction that sets the bit completes execution. In stop mode the internal oscillator, CPU, and all digital peripherals are stopped; the state of the external oscillator circuit is not affected. Each analog peripheral (including the external oscillator circuit) may be shut down individually prior to entering stop mode. Stop mode can only be terminated by an internal or external reset. On reset, the device performs the normal reset sequence and begins program execution at address 0x0000.

If enabled, the Missing Clock Detector will cause an internal reset and thereby terminate the stop mode. The Missing Clock Detector should be disabled if the CPU is to be put to in STOP mode for longer than the MCD timeout.

By default, when in stop mode the internal regulator is still active. However, the regulator can be configured to shut down while in stop mode to save power. To shut down the regulator in stop mode, the STOPCF bit in register REG01CN should be set to 1 prior to setting the STOP bit (see SFR Definition 9.1). If the regulator is shut down using the STOPCF bit, only the $\overline{\text{RST}}$ pin or a full power cycle are capable of resetting the device.

10.3. Suspend Mode

Setting the SUSPEND bit (OSCICN.5) causes the hardware to halt the high-frequency internal oscillator and go into suspend mode as soon as the instruction that sets the bit completes execution. All internal registers and memory maintain their original data. The CPU is not halted in Suspend, so code can still be executed using an oscillator other than the internal high-frequency oscillator.

Suspend mode can be terminated by a rising or falling edge on the INT2 pin or a device reset event. When suspend mode is terminated, if the oscillator source is the internal high-frequency oscillator, the device will continue execution on the instruction following the one that set the SUSPEND bit. If the wake event was configured to generate an interrupt, the interrupt will be serviced upon waking the device. If suspend mode is terminated by an internal or external reset, the CIP-51 performs a normal reset sequence and begins program execution at address 0x0000.

SFR Definition 10.1. PCON: Power Control

Bit	7	6	5	4	3	2	1	0
Name	GF[5:0]						STOP	IDLE
Type	R/W						R/W	R/W
Reset	0	0	0	0	0	0	0	0

SFR Address = 0x87; SFR Page = All Pages

Bit	Name	Function
7:2	GF[5:0]	**General Purpose Flags 5–0.** These are general purpose flags for use under software control.
1	STOP	**Stop Mode Select.** Setting this bit will place the CIP-51 in stop mode. This bit will always be read as 0. 1: CPU goes into stop mode (internal oscillator stopped).
0	IDLE	**IDLE: Idle Mode Select.** Setting this bit will place the CIP-51 in Idle mode. This bit will always be read as 0. 1: CPU goes into Idle mode. (Shuts off clock to CPU, but clock to Timers, Interrupts, Serial Ports, and Analog Peripherals are still active.)

11. CIP-51 Microcontroller

The MCU system controller core is the CIP-51 microcontroller. The CIP-51 is fully compatible with the MCS-51™ instruction set; standard 803x/805x assemblers and compilers can be used to develop software. The MCU family has a superset of all the peripherals included with a standard 8051. The CIP-51 also includes on-chip debug hardware (see description in Section 27), and interfaces directly with the analog and digital subsystems providing a complete data acquisition or control-system solution in a single integrated circuit.

The CIP-51 Microcontroller core implements the standard 8051 organization and peripherals as well as additional custom peripherals and functions to extend its capability (see Figure 11.1 for a block diagram). The CIP-51 includes the following features:

- Fully Compatible with MCS-51 Instruction Set
- 48 MIPS Peak Throughput with 48 MHz Clock
- 0 to 48 MHz Clock Frequency
- Extended Interrupt Handler
- Reset Input
- Power Management Modes
- On-chip Debug Logic
- Program and Data Memory Security

Performance

The CIP-51 employs a pipelined architecture that greatly increases its instruction throughput over the standard 8051 architecture. In a standard 8051, all instructions except for MUL and DIV take 12 or 24 system clock cycles to execute, and usually have a maximum system clock of 12 MHz. By contrast, the CIP-51 core executes 70% of its instructions in one or two system clock cycles, with no instructions taking more than eight system clock cycles.

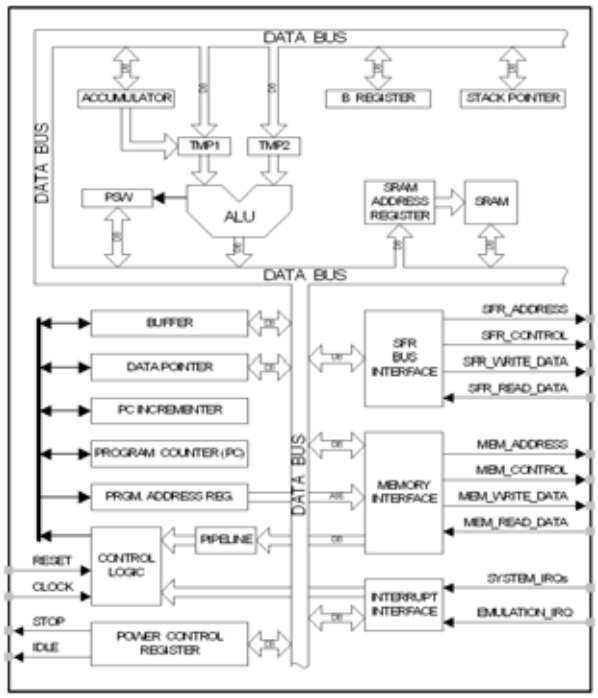

Figure 11.1. CIP-51 Block Diagram

With the CIP-51's maximum system clock at 48 MHz, it has a peak throughput of 48 MIPS. The CIP-51 has a total of 109 instructions. The table below shows the total number of instructions that require each execution time.

Clocks to Execute	1	2	2/4	3	3/5	4	5	4/6	6	8
Number of Instructions	26	50	5	10	6	5	2	2	2	1

Programming and Debugging Support

In-system programming of the Flash program memory and communication with on-chip debug support logic is accomplished via the Silicon Labs 2-Wire Development Interface (C2).

The on-chip debug support logic facilitates full speed in-circuit debugging, allowing the setting of hardware breakpoints, starting, stopping and single stepping through program execution (including interrupt service routines), examination of the program's call stack, and reading/writing the contents of registers and memory. This method of on-chip debugging is completely non-intrusive, requiring no RAM, Stack, timers, or other on-chip resources. C2 details can be found in Section “27. C2 Interface” on page 277.

The CIP-51 is supported by development tools from Silicon Labs and third party vendors. Silicon Labs provides an integrated development environment (IDE) including editor, debugger and programmer. The IDE's debugger and programmer interface to the CIP-51 via the C2 interface to provide fast and efficient in-system device programming and debugging. Third party macro assemblers and C compilers are also available.

11.1. Instruction Set

The instruction set of the CIP-51 System Controller is fully compatible with the standard MCS-51™ instruction set. Standard 8051 development tools can be used to develop software for the CIP-51. All CIP-51 instructions are the binary and functional equivalent of their MCS-51™ counterparts, including opcodes, addressing modes and effect on PSW flags. However, instruction timing is different than that of the standard 8051.

11.1.1. Instruction and CPU Timing

In many 8051 implementations, a distinction is made between machine cycles and clock cycles, with machine cycles varying from 2 to 12 clock cycles in length. However, the CIP-51 implementation is based solely on clock cycle timing. All instruction timings are specified in terms of clock cycles.

Due to the pipelined architecture of the CIP-51, most instructions execute in the same number of clock cycles as there are program bytes in the instruction. Conditional branch instructions take one less clock cycle to complete when the branch is not taken as opposed to when the branch is taken. Table 11.1 is the CIP-51 Instruction Set Summary, which includes the mnemonic, number of bytes, and number of clock cycles for each instruction.

Table 11.1. CIP-51 Instruction Set Summary

Mnemonic	Description	Bytes	Clock Cycles
Arithmetic Operations			
ADD A, Rn	Add register to A	1	1
ADD A, direct	Add direct byte to A	2	2
ADD A, @Ri	Add indirect RAM to A	1	2
ADD A, #data	Add immediate to A	2	2
ADDC A, Rn	Add register to A with carry	1	1
ADDC A, direct	Add direct byte to A with carry	2	2
ADDC A, @Ri	Add indirect RAM to A with carry	1	2
ADDC A, #data	Add immediate to A with carry	2	2
SUBB A, Rn	Subtract register from A with borrow	1	1
SUBB A, direct	Subtract direct byte from A with borrow	2	2
SUBB A, @Ri	Subtract indirect RAM from A with borrow	1	2
SUBB A, #data	Subtract immediate from A with borrow	2	2
INC A	Increment A	1	1
INC Rn	Increment register	1	1
INC direct	Increment direct byte	2	2
INC @Ri	Increment indirect RAM	1	2
DEC A	Decrement A	1	1
DEC Rn	Decrement register	1	1
DEC direct	Decrement direct byte	2	2
DEC @Ri	Decrement indirect RAM	1	2
INC DPTR	Increment Data Pointer	1	1
MUL AB	Multiply A and B	1	4
DIV AB	Divide A by B	1	8
DA A	Decimal adjust A	1	1
Logical Operations			
ANL A, Rn	AND Register to A	1	1
ANL A, direct	AND direct byte to A	2	2
ANL A, @Ri	AND indirect RAM to A	1	2
ANL A, #data	AND immediate to A	2	2
ANL direct, A	AND A to direct byte	2	2
ANL direct, #data	AND immediate to direct byte	3	3
ORL A, Rn	OR Register to A	1	1
ORL A, direct	OR direct byte to A	2	2
ORL A, @Ri	OR indirect RAM to A	1	2
ORL A, #data	OR immediate to A	2	2
ORL direct, A	OR A to direct byte	2	2
ORL direct, #data	OR immediate to direct byte	3	3
XRL A, Rn	Exclusive-OR Register to A	1	1
XRL A, direct	Exclusive-OR direct byte to A	2	2
XRL A, @Ri	Exclusive-OR indirect RAM to A	1	2
XRL A, #data	Exclusive-OR immediate to A	2	2
XRL direct, A	Exclusive-OR A to direct byte	2	2

Table 11.1. CIP-51 Instruction Set Summary (Continued)

Mnemonic	Description	Bytes	Clock Cycles
XRL direct, #data	Exclusive-OR immediate to direct byte	3	3
CLR A	Clear A	1	1
CPL A	Complement A	1	1
RL A	Rotate A left	1	1
RLC A	Rotate A left through Carry	1	1
RR A	Rotate A right	1	1
RRC A	Rotate A right through Carry	1	1
SWAP A	Swap nibbles of A	1	1
Data Transfer			
MOV A, Rn	Move Register to A	1	1
MOV A, direct	Move direct byte to A	2	2
MOV A, @Ri	Move indirect RAM to A	1	2
MOV A, #data	Move immediate to A	2	2
MOV Rn, A	Move A to Register	1	1
MOV Rn, direct	Move direct byte to Register	2	2
MOV Rn, #data	Move immediate to Register	2	2
MOV direct, A	Move A to direct byte	2	2
MOV direct, Rn	Move Register to direct byte	2	2
MOV direct, direct	Move direct byte to direct byte	3	3
MOV direct, @Ri	Move indirect RAM to direct byte	2	2
MOV direct, #data	Move immediate to direct byte	3	3
MOV @Ri, A	Move A to indirect RAM	1	2
MOV @Ri, direct	Move direct byte to indirect RAM	2	2
MOV @Ri, #data	Move immediate to indirect RAM	2	2
MOV DPTR, #data16	Load DPTR with 16-bit constant	3	3
MOVC A, @A+DPTR	Move code byte relative DPTR to A	1	3
MOVC A, @A+PC	Move code byte relative PC to A	1	3
MOVX A, @Ri	Move external data (8-bit address) to A	1	3
MOVX @Ri, A	Move A to external data (8-bit address)	1	3
MOVX A, @DPTR	Move external data (16-bit address) to A	1	3
MOVX @DPTR, A	Move A to external data (16-bit address)	1	3
PUSH direct	Push direct byte onto stack	2	2
POP direct	Pop direct byte from stack	2	2
XCH A, Rn	Exchange Register with A	1	1
XCH A, direct	Exchange direct byte with A	2	2
XCH A, @Ri	Exchange indirect RAM with A	1	2
XCHD A, @Ri	Exchange low nibble of indirect RAM with A	1	2
Boolean Manipulation			
CLR C	Clear Carry	1	1
CLR bit	Clear direct bit	2	2
SETB C	Set Carry	1	1
SETB bit	Set direct bit	2	2
CPL C	Complement Carry	1	1
CPL bit	Complement direct bit	2	2

Table 11.1. CIP-51 Instruction Set Summary (Continued)

Mnemonic	Description	Bytes	Clock Cycles
ANL C, bit	AND direct bit to Carry	2	2
ANL C, /bit	AND complement of direct bit to Carry	2	2
ORL C, bit	OR direct bit to carry	2	2
ORL C, /bit	OR complement of direct bit to Carry	2	2
MOV C, bit	Move direct bit to Carry	2	2
MOV bit, C	Move Carry to direct bit	2	2
Program Flow Timings are listed with the PFE on and FLRT = 0. Extra cycles are required for branches if FLRT = 1.			
JC rel	Jump if Carry is set	2	2/4
JNC rel	Jump if Carry is not set	2	2/4
JB bit, rel	Jump if direct bit is set	3	3/5
JNB bit, rel	Jump if direct bit is not set	3	3/5
JBC bit, rel	Jump if direct bit is set and clear bit	3	3/5
ACALL addr11	Absolute subroutine call	2	4
LCALL addr16	Long subroutine call	3	5
RET	Return from subroutine	1	6
RETI	Return from interrupt	1	6
AJMP addr11	Absolute jump	2	4
LJMP addr16	Long jump	3	5
SJMP rel	Short jump (relative address)	2	4
JMP @A+DPTR	Jump indirect relative to DPTR	1	4
JZ rel	Jump if A equals zero	2	2/4
JNZ rel	Jump if A does not equal zero	2	2/4
CJNE A, direct, rel	Compare direct byte to A and jump if not equal	3	4/6
CJNE A, #data, rel	Compare immediate to A and jump if not equal	3	3/5
CJNE Rn, #data, rel	Compare immediate to Register and jump if not equal	3	3/5
CJNE @Ri, #data, rel	Compare immediate to indirect and jump if not equal	3	4/6
DJNZ Rn, rel	Decrement Register and jump if not zero	2	2/4
DJNZ direct, rel	Decrement direct byte and jump if not zero	3	3/5
NOP	No operation	1	1

Notes on Registers, Operands and Addressing Modes:
Rn - Register R0–R7 of the currently selected register bank. **@Ri** - Data RAM location addressed indirectly through R0 or R1. **rel** - 8-bit, signed (two's complement) offset relative to the first byte of the following instruction. Used by SJMP and all conditional jumps. **direct** - 8-bit internal data location's address. This could be a direct-access Data RAM location (0x00–0x7F) or an SFR (0x80–0xFF). **#data** - 8-bit constant **#data16** - 16-bit constant **bit** - Direct-accessed bit in Data RAM or SFR **addr11** - 11-bit destination address used by ACALL and AJMP. The destination must be within the same 2 kB page of program memory as the first byte of the following instruction. **addr16** - 16-bit destination address used by LCALL and LJMP. The destination may be anywhere within the 8 kB program memory space. There is one unused opcode (0xA5) that performs the same function as NOP. All mnemonics copyrighted © Intel Corporation 1980.

11.2. CIP-51 Register Descriptions

Following are descriptions of SFRs related to the operation of the CIP-51 System Controller. Reserved bits should always be written to the value indicated in the SFR description. Future product versions may use these bits to implement new features in which case the reset value of the bit will be the indicated value, selecting the feature's default state. Detailed descriptions of the remaining SFRs are included in the sections of the datasheet associated with their corresponding system function.

SFR Definition 11.1. DPL: Data Pointer Low Byte

Bit	7	6	5	4	3	2	1	0
Name	DPL[7:0]							
Type	R/W							
Reset	0	0	0	0	0	0	0	0

SFR Address = 0x82; SFR Page = All Pages

Bit	Name	Function
7:0	DPL[7:0]	**Data Pointer Low.** The DPL register is the low byte of the 16-bit DPTR.

SFR Definition 11.2. DPH: Data Pointer High Byte

Bit	7	6	5	4	3	2	1	0
Name	DPH[7:0]							
Type	R/W							
Reset	0	0	0	0	0	0	0	0

SFR Address = 0x83; SFR Page = All Pages

Bit	Name	Function
7:0	DPH[7:0]	**Data Pointer High.** The DPH register is the high byte of the 16-bit DPTR.

SFR Definition 11.3. SP: Stack Pointer

Bit	7	6	5	4	3	2	1	0
Name	SP[7:0]							
Type	R/W							
Reset	0	0	0	0	0	1	1	1

SFR Address = 0x81; SFR Page = All Pages

Bit	Name	Function
7:0	SP[7:0]	**Stack Pointer.** The Stack Pointer holds the location of the top of the stack. The stack pointer is incremented before every PUSH operation. The SP register defaults to 0x07 after reset.

SFR Definition 11.4. ACC: Accumulator

Bit	7	6	5	4	3	2	1	0
Name	ACC[7:0]							
Type	R/W							
Reset	0	0	0	0	0	0	0	0

SFR Address = 0xE0; SFR Page = All Pages; Bit-Addressable

Bit	Name	Function
7:0	ACC[7:0]	**Accumulator.** This register is the accumulator for arithmetic operations.

SFR Definition 11.5. B: B Register

Bit	7	6	5	4	3	2	1	0
Name	B[7:0]							
Type	R/W							
Reset	0	0	0	0	0	0	0	0

SFR Address = 0xF0; SFR Page = All Pages; Bit-Addressable

Bit	Name	Function
7:0	B[7:0]	**B Register.** This register serves as a second accumulator for certain arithmetic operations.

SFR Definition 11.6. PSW: Program Status Word

Bit	7	6	5	4	3	2	1	0
Name	CY	AC	F0	RS[1:0]		OV	F1	PARITY
Type	R/W	R/W	R/W	R/W		R/W	R/W	R
Reset	0	0	0	0	0	0	0	0

SFR Address = 0xD0; SFR Page = All Pages; Bit-Addressable

Bit	Name	Function
7	CY	**Carry Flag.** This bit is set when the last arithmetic operation resulted in a carry (addition) or a borrow (subtraction). It is cleared to logic 0 by all other arithmetic operations.
6	AC	**Auxiliary Carry Flag.** This bit is set when the last arithmetic operation resulted in a carry into (addition) or a borrow from (subtraction) the high order nibble. It is cleared to logic 0 by all other arithmetic operations.
5	F0	**User Flag 0.** This is a bit-addressable, general purpose flag for use under software control.
4:3	RS[1:0]	**Register Bank Select.** These bits select which register bank is used during register accesses. 00: Bank 0, Addresses 0x00-0x07 01: Bank 1, Addresses 0x08-0x0F 10: Bank 2, Addresses 0x10-0x17 11: Bank 3, Addresses 0x18-0x1F
2	OV	**Overflow Flag.** This bit is set to 1 under the following circumstances: • An ADD, ADDC, or SUBB instruction causes a sign-change overflow. • A MUL instruction results in an overflow (result is greater than 255). • A DIV instruction causes a divide-by-zero condition. The OV bit is cleared to 0 by the ADD, ADDC, SUBB, MUL, and DIV instructions in all other cases.
1	F1	**User Flag 1.** This is a bit-addressable, general purpose flag for use under software control.
0	PARITY	**Parity Flag.** This bit is set to logic 1 if the sum of the eight bits in the accumulator is odd and cleared if the sum is even.

12. Prefetch Engine

The C8051F388/9/A/B family of devices incorporate a 2-byte prefetch engine. Because the access time of the Flash memory is 40 ns, and the minimum instruction time is roughly 20 ns, the prefetch engine is necessary for full-speed code execution. Instructions are read from Flash memory two bytes at a time by the prefetch engine and given to the CIP-51 processor core to execute. When running linear code (code without any jumps or branches), the prefetch engine allows instructions to be executed at full speed. When a code branch occurs, the processor may be stalled for up to two clock cycles while the next set of code bytes is retrieved from Flash memory. It is recommended that the prefetch be used for optimal code execution timing.

Note: The prefetch engine can be disabled when the device is in suspend mode to save power.

SFR Definition 12.1. PFE0CN: Prefetch Engine Control

Bit	7	6	5	4	3	2	1	0
Name			PFEN					FLBWE
Type	R	R	R/W	R	R	R	R	R/W
Reset	0	0	1	0	0	0	0	0

SFR Address = 0xAF; SFR Page = All Pages

Bit	Name	Function
7:6	Unused	Read = 00b, Write = don't care.
5	PFEN	**Prefetch Enable.** This bit enables the prefetch engine. 0: Prefetch engine is disabled. 1: Prefetch engine is enabled.
4:1	Unused	Read = 0000b. Write = don't care.
0	FLBWE	**Flash Block Write Enable.** This bit allows block writes to Flash memory from software. 0: Each byte of a software Flash write is written individually. 1: Flash bytes are written in groups of two.

13. Memory Organization

The memory organization of the CIP-51 System Controller is similar to that of a standard 8051. There are two separate memory spaces: program memory and data memory. Program and data memory share the same address space but are accessed via different instruction types. The CIP-51 memory organization is shown in Figure 13.1 and Figure 13.2.

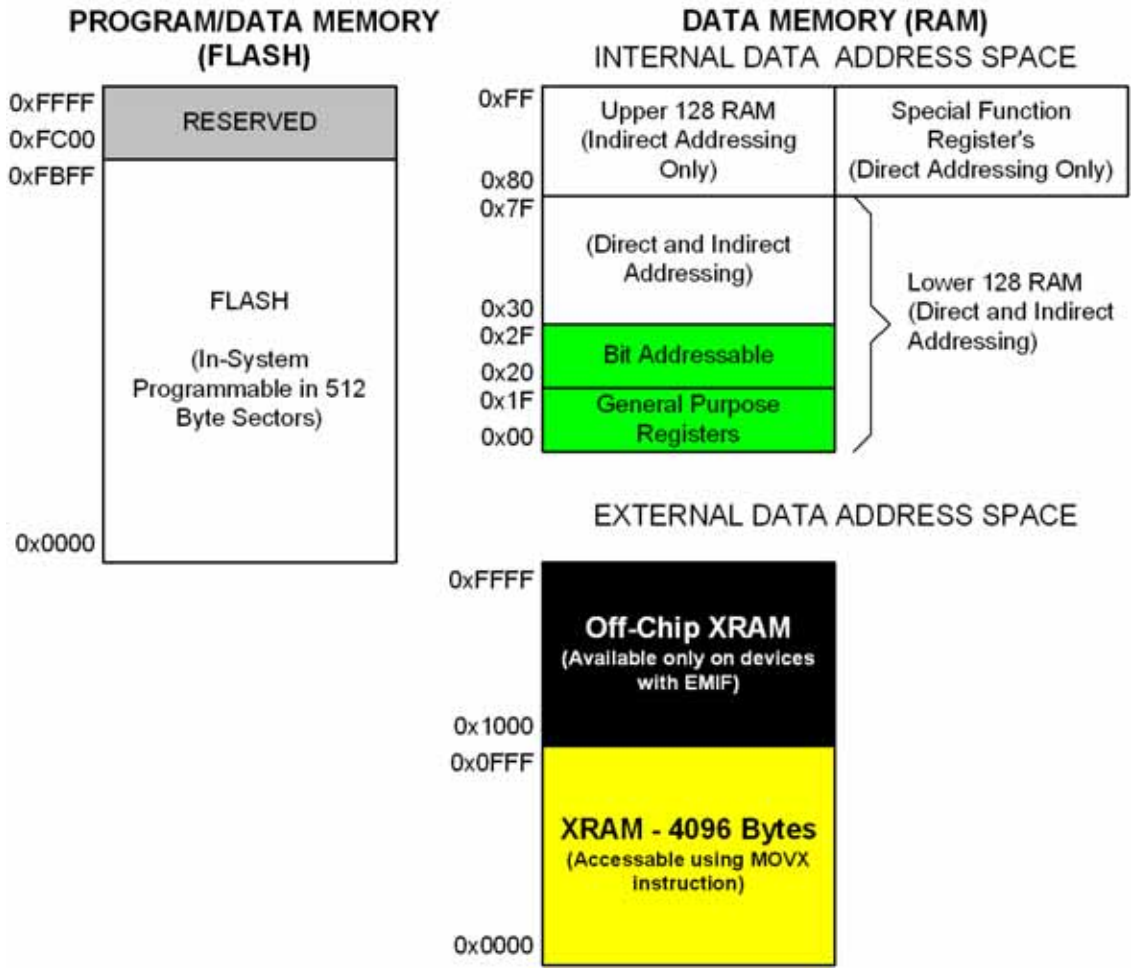

Figure 13.1. On-Chip Memory Map for 64 kB Devices (C8051F388/9)

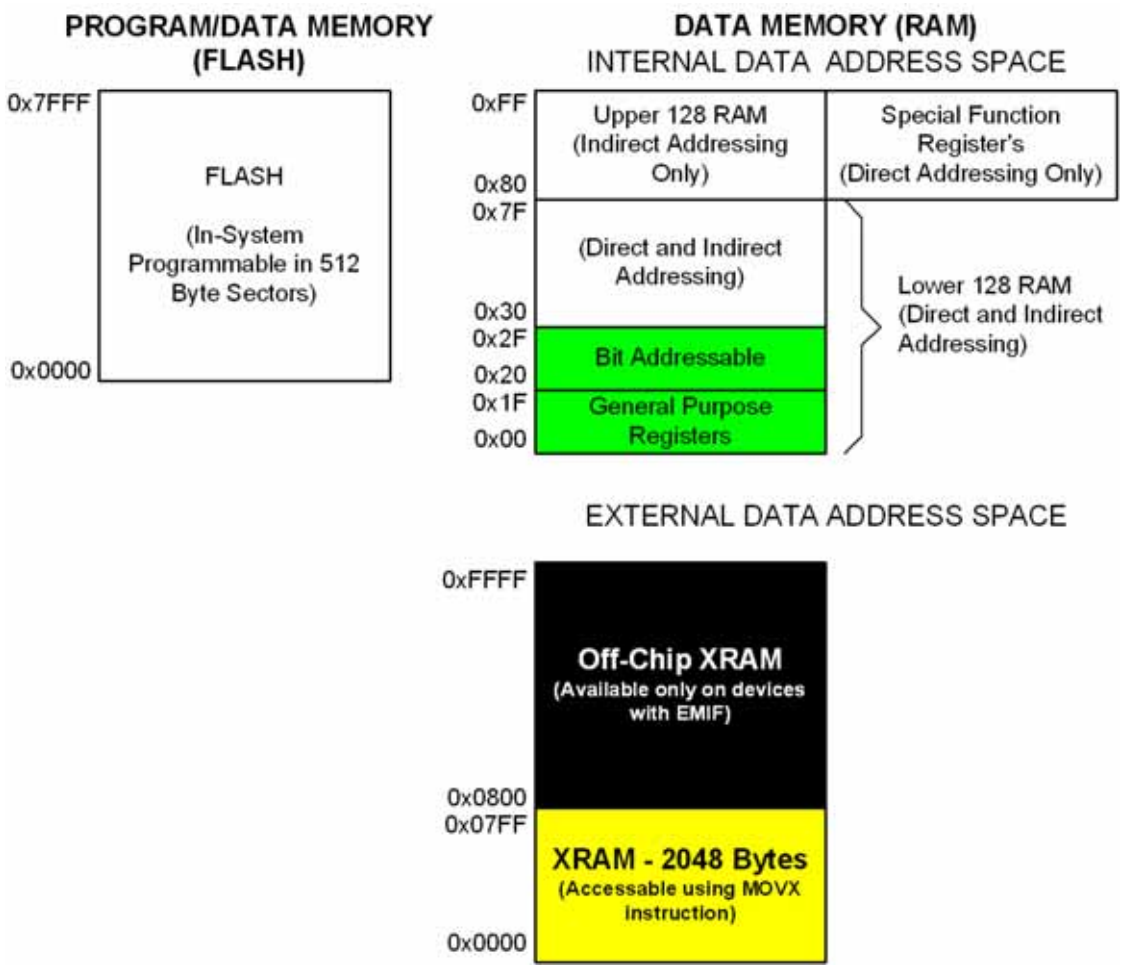

Figure 13.2. On-Chip Memory Map for 32 kB Devices (C8051F38A/B)

13.1. Program Memory

The CIP-51 core has a 64k-byte program memory space. The C8051F388/9/A/B implements 64 or 32 kB of this program memory space as in-system, re-programmable Flash memory. Note that on the C8051F388/9 (64 kB version), addresses above 0xFBFF are reserved.

Program memory is normally assumed to be read-only. However, the CIP-51 can write to program memory by setting the Program Store Write Enable bit (PSCTL.0) and using the MOVX instruction. This feature provides a mechanism for the CIP-51 to update program code and use the program memory space for non-volatile data storage. Refer to Section “18. Flash Memory” on page 129 for further details.

13.2. Data Memory

The CIP-51 includes 256 of internal RAM mapped into the data memory space from 0x00 through 0xFF. The lower 128 bytes of data memory are used for general purpose registers and scratch pad memory. Either direct or indirect addressing may be used to access the lower 128 bytes of data memory. Locations 0x00 through 0x1F are addressable as four banks of general purpose registers, each bank consisting of eight byte-wide registers. The next 16 bytes, locations 0x20 through 0x2F, may either be addressed as bytes or as 128 bit locations accessible with the direct addressing mode.

The upper 128 bytes of data memory are accessible only by indirect addressing. This region occupies the same address space as the Special Function Registers (SFR) but is physically separate from the SFR space. The addressing mode used by an instruction when accessing locations above 0x7F determines whether the CPU accesses the upper 128 bytes of data memory space or the SFRs. Instructions that use direct addressing will access the SFR space. Instructions using indirect addressing above 0x7F access the upper 128 bytes of data memory. Figure 13.1 illustrates the data memory organization of the CIP-51.

13.3. General Purpose Registers

The lower 32 bytes of data memory, locations 0x00 through 0x1F, may be addressed as four banks of general-purpose registers. Each bank consists of eight byte-wide registers designated R0 through R7. Only one of these banks may be enabled at a time. Two bits in the program status word, RS0 (PSW.3) and RS1 (PSW.4), select the active register bank (see description of the PSW in SFR Definition 11.6). This allows fast context switching when entering subroutines and interrupt service routines. Indirect addressing modes use registers R0 and R1 as index registers.

13.4. Bit Addressable Locations

In addition to direct access to data memory organized as bytes, the sixteen data memory locations at 0x20 through 0x2F are also accessible as 128 individually addressable bits. Each bit has a bit address from 0x00 to 0x7F. Bit 0 of the byte at 0x20 has bit address 0x00 while bit7 of the byte at 0x20 has bit address 0x07. Bit 7 of the byte at 0x2F has bit address 0x7F. A bit access is distinguished from a full byte access by the type of instruction used (bit source or destination operands as opposed to a byte source or destination).

The MCS-51™ assembly language allows an alternate notation for bit addressing of the form XX.B where XX is the byte address and B is the bit position within the byte. For example, the instruction:

```
MOV    C, 22h.3
```

moves the Boolean value at 0x13 (bit 3 of the byte at location 0x22) into the Carry flag.

13.5. Stack

A programmer's stack can be located anywhere in the 256-byte data memory. The stack area is designated using the Stack Pointer (SP, 0x81) SFR. The SP will point to the last location used. The next value pushed on the stack is placed at SP+1 and then SP is incremented. A reset initializes the stack pointer to location 0x07. Therefore, the first value pushed on the stack is placed at location 0x08, which is also the first register (R0) of register bank 1. Thus, if more than one register bank is to be used, the SP should be initialized to a location in the data memory not being used for data storage. The stack depth can extend up to 256 bytes.

14. External Data Memory Interface and On-Chip XRAM

The chip includes 4 kB (C8051F388/9) or 2 kB (C8051F38A/B) of RAM on-chip, and is mapped into the external data memory space (XRAM). Additionally, an External Memory Interface (EMIF) is available on the C8051F388/A devices, which can be used to access off-chip data memories and memory-mapped devices connected to the GPIO ports. The external memory space may be accessed using the external move instruction (MOVX) and the data pointer (DPTR), or using the MOVX indirect addressing mode using R0 or R1. If the MOVX instruction is used with an 8-bit address operand (such as @R1), then the high byte of the 16-bit address is provided by the External Memory Interface Control Register (EMI0CN, shown in SFR Definition 14.1). Note: the MOVX instruction can also be used for writing to the FLASH memory. See Section “18. Flash Memory” on page 129 for details. The MOVX instruction accesses XRAM by default.

14.1. Accessing XRAM

The XRAM memory space is accessed using the MOVX instruction. The MOVX instruction has two forms, both of which use an indirect addressing method. The first method uses the Data Pointer, DPTR, a 16-bit register which contains the effective address of the XRAM location to be read from or written to. The second method uses R0 or R1 in combination with the EMI0CN register to generate the effective XRAM address. Examples of both of these methods are given below.

14.1.1. 16-Bit MOVX Example

The 16-bit form of the MOVX instruction accesses the memory location pointed to by the contents of the DPTR register. The following series of instructions reads the value of the byte at address 0x1234 into the accumulator A:

```
MOV    DPTR, #1234h        ; load DPTR with 16-bit address to read (0x1234)
MOVX   A, @DPTR            ; load contents of 0x1234 into accumulator A
```

The above example uses the 16-bit immediate MOV instruction to set the contents of DPTR. Alternately, the DPTR can be accessed through the SFR registers DPH, which contains the upper 8-bits of DPTR, and DPL, which contains the lower 8-bits of DPTR.

14.1.2. 8-Bit MOVX Example

The 8-bit form of the MOVX instruction uses the contents of the EMI0CN SFR to determine the upper 8-bits of the effective address to be accessed and the contents of R0 or R1 to determine the lower 8-bits of the effective address to be accessed. The following series of instructions read the contents of the byte at address 0x1234 into the accumulator A.

```
MOV    EMI0CN, #12h        ; load high byte of address into EMI0CN
MOV    R0, #34h            ; load low byte of address into R0 (or R1)
MOVX   a, @R0              ; load contents of 0x1234 into accumulator A
```

14.2. Configuring the External Memory Interface

Configuring the External Memory Interface consists of five steps:

1. Configure the Output Modes of the associated port pins as either push-pull or open-drain (push-pull is most common), and skip the associated pins in the crossbar.
2. Configure Port latches to “park” the EMIF pins in a dormant state (usually by setting them to logic 1).
3. Select Multiplexed mode or Non-multiplexed mode.
4. Select the memory mode (on-chip only, split mode without bank select, split mode with bank select, or off-chip only).
5. Set up timing to interface with off-chip memory or peripherals.

Each of these five steps is explained in detail in the following sections. The Port selection, Multiplexed mode selection, and Mode bits are located in the EMI0CF register shown in SFR Definition 14.4.

14.3. Port Configuration

The External Memory Interface appears on Ports 4, 3, 2, and 1 when it is used for off-chip memory access. When the EMIF is used, the Crossbar should be configured to skip over the control lines P1.7 ($\overline{WR}$), P1.6 ($\overline{RD}$), and if multiplexed mode is selected P1.3 (ALE) using the P1SKIP register. For more information about configuring the Crossbar, see Section “Figure 20.1. Port I/O Functional Block Diagram (Port 0 through Port 3)” on page 147.

The External Memory Interface claims the associated Port pins for memory operations ONLY during the execution of an off-chip MOVX instruction. Once the MOVX instruction has completed, control of the Port pins reverts to the Port latches or to the Crossbar settings for those pins. See Section “20. Port Input/Output” on page 147 for more information about the Crossbar and Port operation and configuration. **The Port latches should be explicitly configured to ‘park’ the External Memory Interface pins in a dormant state, most commonly by setting them to a logic 1**.

During the execution of the MOVX instruction, the External Memory Interface will explicitly disable the drivers on all Port pins that are acting as Inputs (Data[7:0] during a READ operation, for example). The Output mode of the Port pins (whether the pin is configured as Open-Drain or Push-Pull) is unaffected by the External Memory Interface operation, and remains controlled by the PnMDOUT registers. In most cases, the output modes of all EMIF pins should be configured for push-pull mode.

SFR Definition 14.1. EMI0CN: External Memory Interface Control

Bit	7	6	5	4	3	2	1	0
Name	PGSEL[7:0]							
Type	R/W							
Reset	0	0	0	0	0	0	0	0

SFR Address = 0xAA; SFR Page = All Pages

Bit	Name	Function
7:0	PGSEL[7:0]	**XRAM Page Select Bits.** The XRAM Page Select Bits provide the high byte of the 16-bit external data memory address when using an 8-bit MOVX command, effectively selecting a 256-byte page of RAM. 0x00: 0x0000 to 0x00FF 0x01: 0x0100 to 0x01FF ... 0xFE: 0xFE00 to 0xFEFF 0xFF: 0xFF00 to 0xFFFF

SFR Definition 14.2. EMI0CF: External Memory Interface Configuration

Bit	7	6	5	4	3	2	1	0
Name		Reserved		EMD2	EMD[1:0]		EALE[1:0]	
Type	R	R/W	R	R/W	R/W		R/W	
Reset	0	0	0	0	0	0	1	1

SFR Address = 0x85; SFR Page = All Pages

Bit	Name	Function
7	Unused	Read = 0b; Write = don't care.
6	Reserved	Read = 0b; Must Write 0b.
5	Unused	Read = 0b; Write = don't care.
4	EMD2	**EMIF Multiplex Mode Select.** 0: EMIF operates in multiplexed address/data mode. 1: EMIF operates in non-multiplexed mode (separate address and data pins).
3:2	EMD[1:0]	**EMIF Operating Mode Select.** These bits control the operating mode of the External Memory Interface. 00: Internal Only: MOVX accesses on-chip XRAM only. All effective addresses alias to on-chip memory space. 01: Split Mode without Bank Select: Accesses below the on-chip XRAM boundary are directed on-chip. Accesses above the on-chip XRAM boundary are directed off-chip. 8-bit off-chip MOVX operations use the current contents of the Address High port latches to resolve upper address byte. Note that in order to access off-chip space, EMI0CN must be set to a page that is not contained in the on-chip address space. 10: Split Mode with Bank Select: Accesses below the on-chip XRAM boundary are directed on-chip. Accesses above the on-chip XRAM boundary are directed off-chip. 8-bit off-chip MOVX operations use the contents of EMI0CN to determine the high-byte of the address. 11: External Only: MOVX accesses off-chip XRAM only. On-chip XRAM is not visible to the CPU.
1:0	EALE[1:0]	**ALE Pulse-Width Select Bits (only has effect when EMD2 = 0).** 00: ALE high and ALE low pulse width = 1 SYSCLK cycle. 01: ALE high and ALE low pulse width = 2 SYSCLK cycles. 10: ALE high and ALE low pulse width = 3 SYSCLK cycles. 11: ALE high and ALE low pulse width = 4 SYSCLK cycles.

14.4. Multiplexed and Non-multiplexed Selection

The External Memory Interface is capable of acting in a Multiplexed mode or a Non-multiplexed mode, depending on the state of the EMD2 (EMI0CF.4) bit.

14.4.1. Multiplexed Configuration

In Multiplexed mode, the Data Bus and the lower 8-bits of the Address Bus share the same Port pins: AD[7:0]. In this mode, an external latch (74HC373 or equivalent logic gate) is used to hold the lower 8-bits of the RAM address. The external latch is controlled by the ALE (Address Latch Enable) signal, which is driven by the External Memory Interface logic. An example of a Multiplexed Configuration is shown in Figure 14.1.

In Multiplexed mode, the external MOVX operation can be broken into two phases delineated by the state of the ALE signal. During the first phase, ALE is high and the lower 8-bits of the Address Bus are presented to AD[7:0]. During this phase, the address latch is configured such that the 'Q' outputs reflect the states of the 'D' inputs. When ALE falls, signaling the beginning of the second phase, the address latch outputs remain fixed and are no longer dependent on the latch inputs. Later in the second phase, the Data Bus controls the state of the AD[7:0] port at the time $\overline{RD}$ or $\overline{WR}$ is asserted.

See Section "14.6.2. Multiplexed Mode" on page 101 for more information.

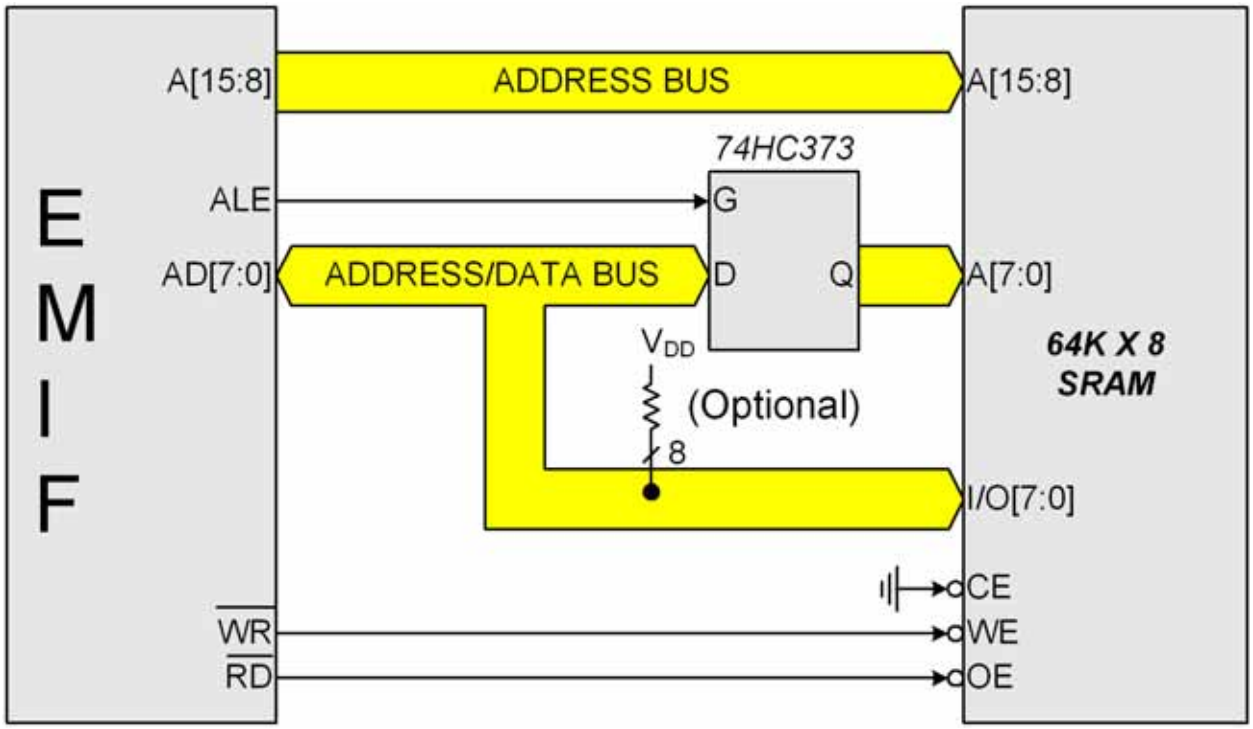

Figure 14.1. Multiplexed Configuration Example

14.4.2. Non-multiplexed Configuration

In Non-multiplexed mode, the Data Bus and the Address Bus pins are not shared. An example of a Non-multiplexed Configuration is shown in Figure 14.2. See Section “14.6.1. Non-multiplexed Mode” on page 98 for more information about Non-multiplexed operation.

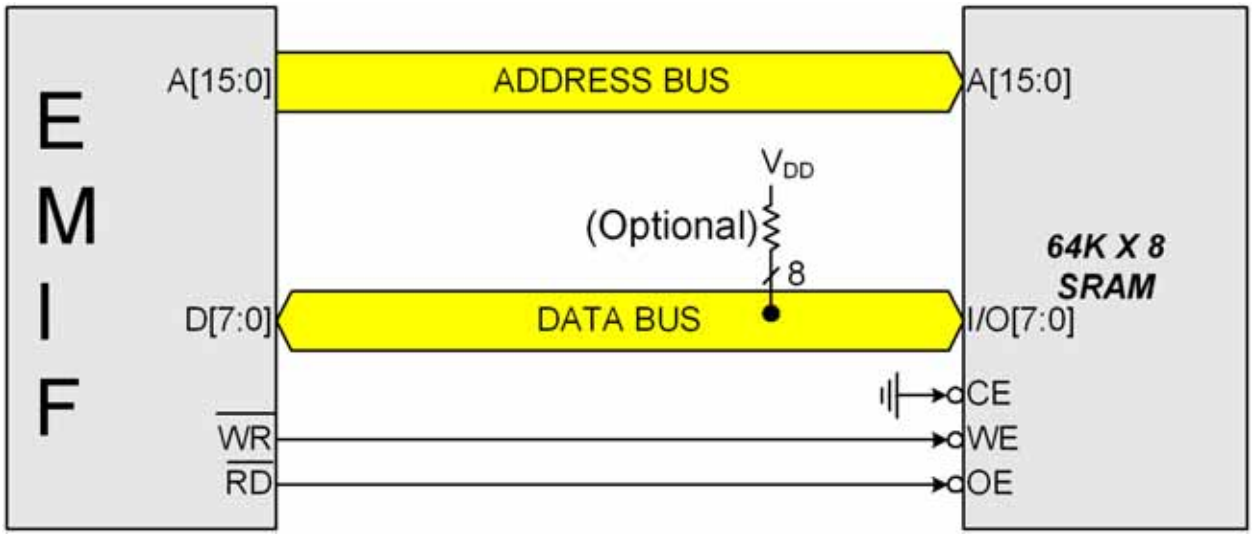

Figure 14.2. Non-multiplexed Configuration Example

14.5. Memory Mode Selection

The external data memory space can be configured in one of four modes, shown in Figure 14.3, based on the EMIF Mode bits in the EMI0CF register (SFR Definition 14.4). These modes are summarized below. More information about the different modes can be found in Section “14.6. Timing” on page 96.

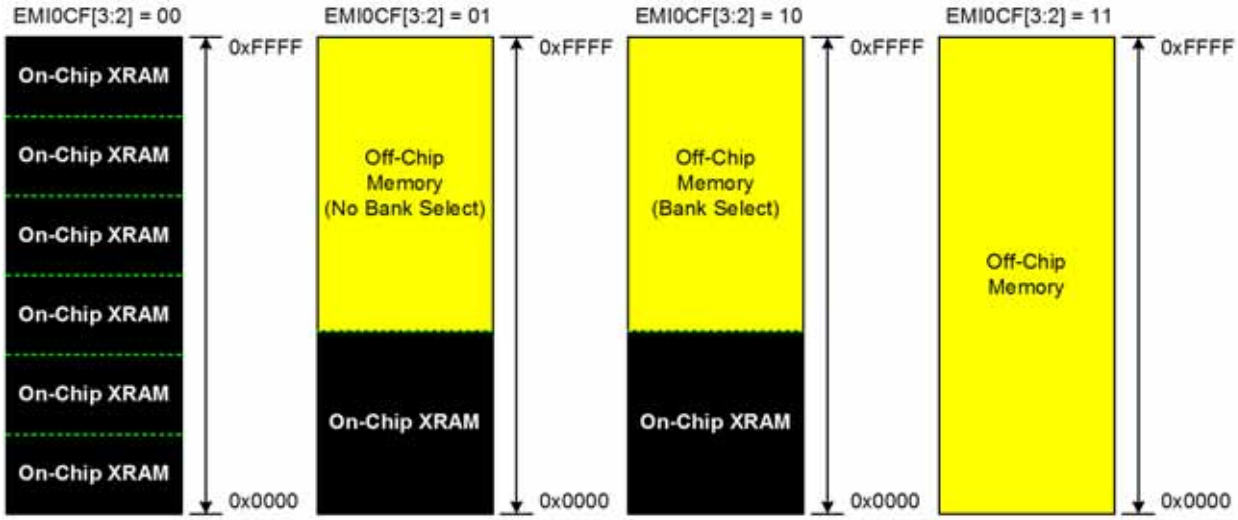

Figure 14.3. EMIF Operating Modes

14.5.1. Internal XRAM Only

When EMI0CF.[3:2] are set to 00, all MOVX instructions will target the internal XRAM space on the device. Memory accesses to addresses beyond the populated space will wrap on 2k or 4k boundaries (depending on the RAM available on the device). As an example, the addresses 0x1000 and 0x2000 both evaluate to address 0x0000 in on-chip XRAM space.

- 8-bit MOVX operations use the contents of EMI0CN to determine the high-byte of the effective address and R0 or R1 to determine the low-byte of the effective address.
- 16-bit MOVX operations use the contents of the 16-bit DPTR to determine the effective address.

14.5.2. Split Mode without Bank Select

When EMI0CF.[3:2] are set to 01, the XRAM memory map is split into two areas, on-chip space and off-chip space.

- Effective addresses below the internal XRAM size boundary will access on-chip XRAM space.
- Effective addresses above the internal XRAM size boundary will access off-chip space.
- 8-bit MOVX operations use the contents of EMI0CN to determine whether the memory access is on-chip or off-chip. However, in the “No Bank Select” mode, an 8-bit MOVX operation will not drive the upper 8-bits A[15:8] of the Address Bus during an off-chip access. This allows the user to manipulate the upper address bits at will by setting the Port state directly via the port latches. This behavior is in contrast with “Split Mode with Bank Select” described below. The lower 8-bits of the Address Bus A[7:0] are driven, determined by R0 or R1.
- 16-bit MOVX operations use the contents of DPTR to determine whether the memory access is on-chip or off-chip, and unlike 8-bit MOVX operations, the full 16-bits of the Address Bus A[15:0] are driven during the off-chip transaction.

14.5.3. Split Mode with Bank Select

When EMI0CF.[3:2] are set to 10, the XRAM memory map is split into two areas, on-chip space and off-chip space.

- Effective addresses below the internal XRAM size boundary will access on-chip XRAM space.
- Effective addresses above the internal XRAM size boundary will access off-chip space.
- 8-bit MOVX operations use the contents of EMI0CN to determine whether the memory access is on-chip or off-chip. The upper 8-bits of the Address Bus A[15:8] are determined by EMI0CN, and the lower 8-bits of the Address Bus A[7:0] are determined by R0 or R1. All 16-bits of the Address Bus A[15:0] are driven in “Bank Select” mode.
- 16-bit MOVX operations use the contents of DPTR to determine whether the memory access is on-chip or off-chip, and the full 16-bits of the Address Bus A[15:0] are driven during the off-chip transaction.

14.5.4. External Only

When EMI0CF[3:2] are set to 11, all MOVX operations are directed to off-chip space. On-chip XRAM is not visible to the CPU. This mode is useful for accessing off-chip memory located between 0x0000 and the internal XRAM size boundary.

- 8-bit MOVX operations ignore the contents of EMI0CN. The upper Address bits A[15:8] are not driven (identical behavior to an off-chip access in “Split Mode without Bank Select” described above). This allows the user to manipulate the upper address bits at will by setting the Port state directly. The lower 8-bits of the effective address A[7:0] are determined by the contents of R0 or R1.
- 16-bit MOVX operations use the contents of DPTR to determine the effective address A[15:0]. The full 16-bits of the Address Bus A[15:0] are driven during the off-chip transaction.

14.6. Timing

The timing parameters of the External Memory Interface can be configured to enable connection to devices having different setup and hold time requirements. The Address Setup time, Address Hold time, $\overline{RD}$ and $\overline{WR}$ strobe widths, and in multiplexed mode, the width of the ALE pulse are all programmable in units of SYSCLK periods through EMI0TC, shown in SFR Definition 14.3, and EMI0CF[1:0].

The timing for an off-chip MOVX instruction can be calculated by adding 4 SYSCLK cycles to the timing parameters defined by the EMI0TC register. Assuming non-multiplexed operation, the minimum execution time for an off-chip XRAM operation is 5 SYSCLK cycles (1 SYSCLK for $\overline{RD}$ or $\overline{WR}$ pulse + 4 SYSCLKs). For multiplexed operations, the Address Latch Enable signal will require a minimum of 2 additional SYSCLK cycles. Therefore, the minimum execution time for an off-chip XRAM operation in multiplexed mode is 7 SYSCLK cycles (2 for $\overline{ALE}$ + 1 for $\overline{RD}$ or $\overline{WR}$ + 4). The programmable setup and hold times default to the maximum delay settings after a reset. Table 14.1 lists the AC parameters for the External Memory Interface, and Figure 14.4 through Figure 14.9 show the timing diagrams for the different External Memory Interface modes and MOVX operations.

SFR Definition 14.3. EMI0TC: External Memory Timing Control

Bit	7	6	5	4	3	2	1	0
Name	EAS[1:0]		EWR[3:0]				EAH[1:0]	
Type	R/W		R/W				R/W	
Reset	1	1	1	1	1	1	1	1

SFR Address = 0x84; SFR Page = All Pages

Bit	Name	Function
7:6	EAS[1:0]	**EMIF Address Setup Time Bits.** 00: Address setup time = 0 SYSCLK cycles. 01: Address setup time = 1 SYSCLK cycle. 10: Address setup time = 2 SYSCLK cycles. 11: Address setup time = 3 SYSCLK cycles.
5:2	EWR[3:0]	**EMIF $\overline{\text{WR}}$ and $\overline{\text{RD}}$ Pulse-Width Control Bits.** 0000: $\overline{\text{WR}}$ and $\overline{\text{RD}}$ pulse width = 1 SYSCLK cycle. 0001: $\overline{\text{WR}}$ and $\overline{\text{RD}}$ pulse width = 2 SYSCLK cycles. 0010: $\overline{\text{WR}}$ and $\overline{\text{RD}}$ pulse width = 3 SYSCLK cycles. 0011: $\overline{\text{WR}}$ and $\overline{\text{RD}}$ pulse width = 4 SYSCLK cycles. 0100: $\overline{\text{WR}}$ and $\overline{\text{RD}}$ pulse width = 5 SYSCLK cycles. 0101: $\overline{\text{WR}}$ and $\overline{\text{RD}}$ pulse width = 6 SYSCLK cycles. 0110: $\overline{\text{WR}}$ and $\overline{\text{RD}}$ pulse width = 7 SYSCLK cycles. 0111: $\overline{\text{WR}}$ and $\overline{\text{RD}}$ pulse width = 8 SYSCLK cycles. 1000: $\overline{\text{WR}}$ and $\overline{\text{RD}}$ pulse width = 9 SYSCLK cycles. 1001: $\overline{\text{WR}}$ and $\overline{\text{RD}}$ pulse width = 10 SYSCLK cycles. 1010: $\overline{\text{WR}}$ and $\overline{\text{RD}}$ pulse width = 11 SYSCLK cycles. 1011: $\overline{\text{WR}}$ and $\overline{\text{RD}}$ pulse width = 12 SYSCLK cycles. 1100: $\overline{\text{WR}}$ and $\overline{\text{RD}}$ pulse width = 13 SYSCLK cycles. 1101: $\overline{\text{WR}}$ and $\overline{\text{RD}}$ pulse width = 14 SYSCLK cycles. 1110: $\overline{\text{WR}}$ and $\overline{\text{RD}}$ pulse width = 15 SYSCLK cycles. 1111: $\overline{\text{WR}}$ and $\overline{\text{RD}}$ pulse width = 16 SYSCLK cycles.
1:0	EAH[1:0]	**EMIF Address Hold Time Bits.** 00: Address hold time = 0 SYSCLK cycles. 01: Address hold time = 1 SYSCLK cycle. 10: Address hold time = 2 SYSCLK cycles. 11: Address hold time = 3 SYSCLK cycles.

14.6.1. Non-multiplexed Mode

14.6.1.1. 16-bit MOVX: EMI0CF[4:2] = 101, 110, or 111

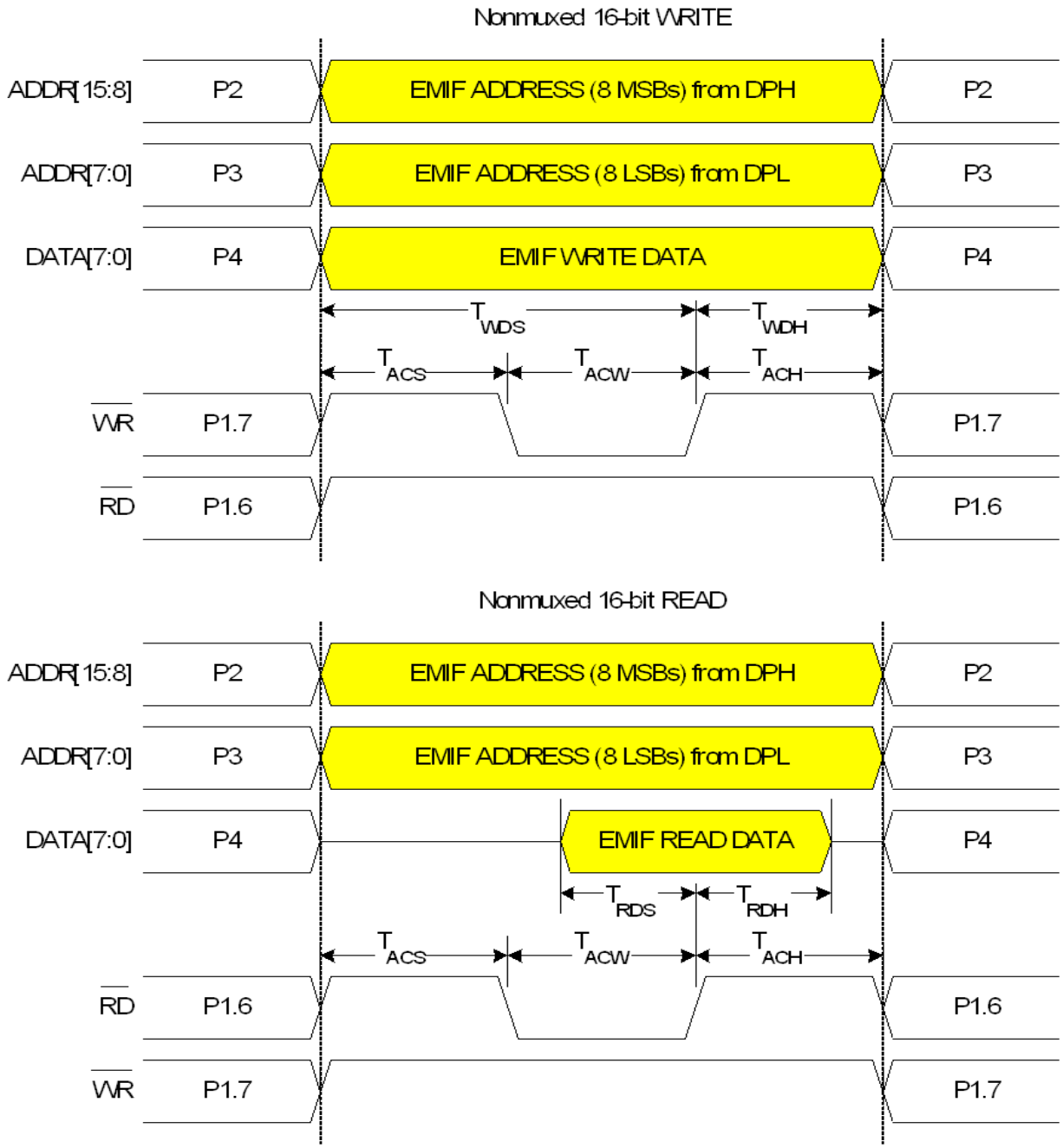

Figure 14.4. Non-Multiplexed 16-bit MOVX Timing

14.6.1.2. 8-bit MOVX without Bank Select: EMI0CF[4:2] = 101 or 111

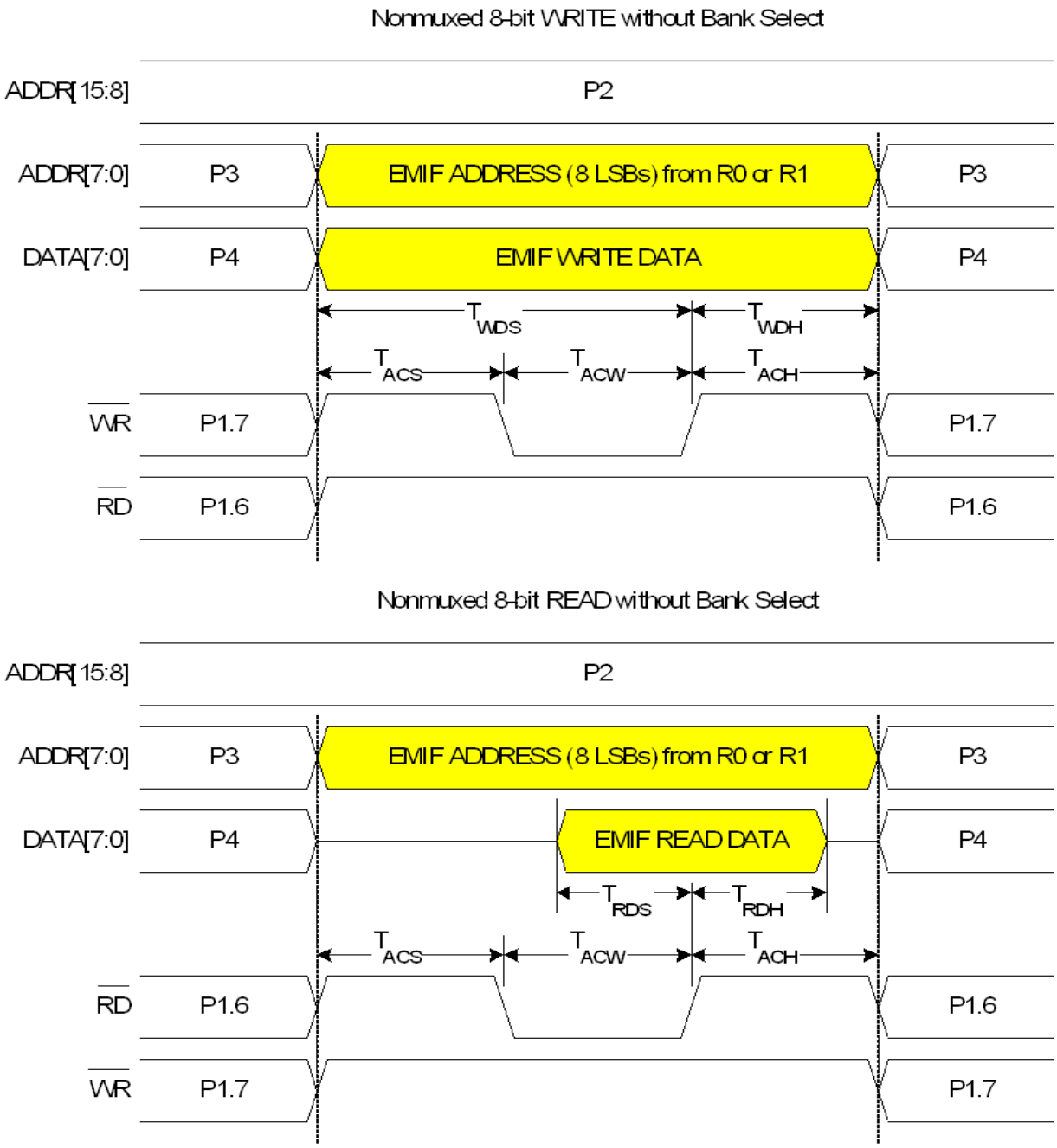

Figure 14.5. Non-Multiplexed 8-bit MOVX without Bank Select Timing

14.6.1.3. 8-bit MOVX with Bank Select: EMI0CF[4:2] = 110

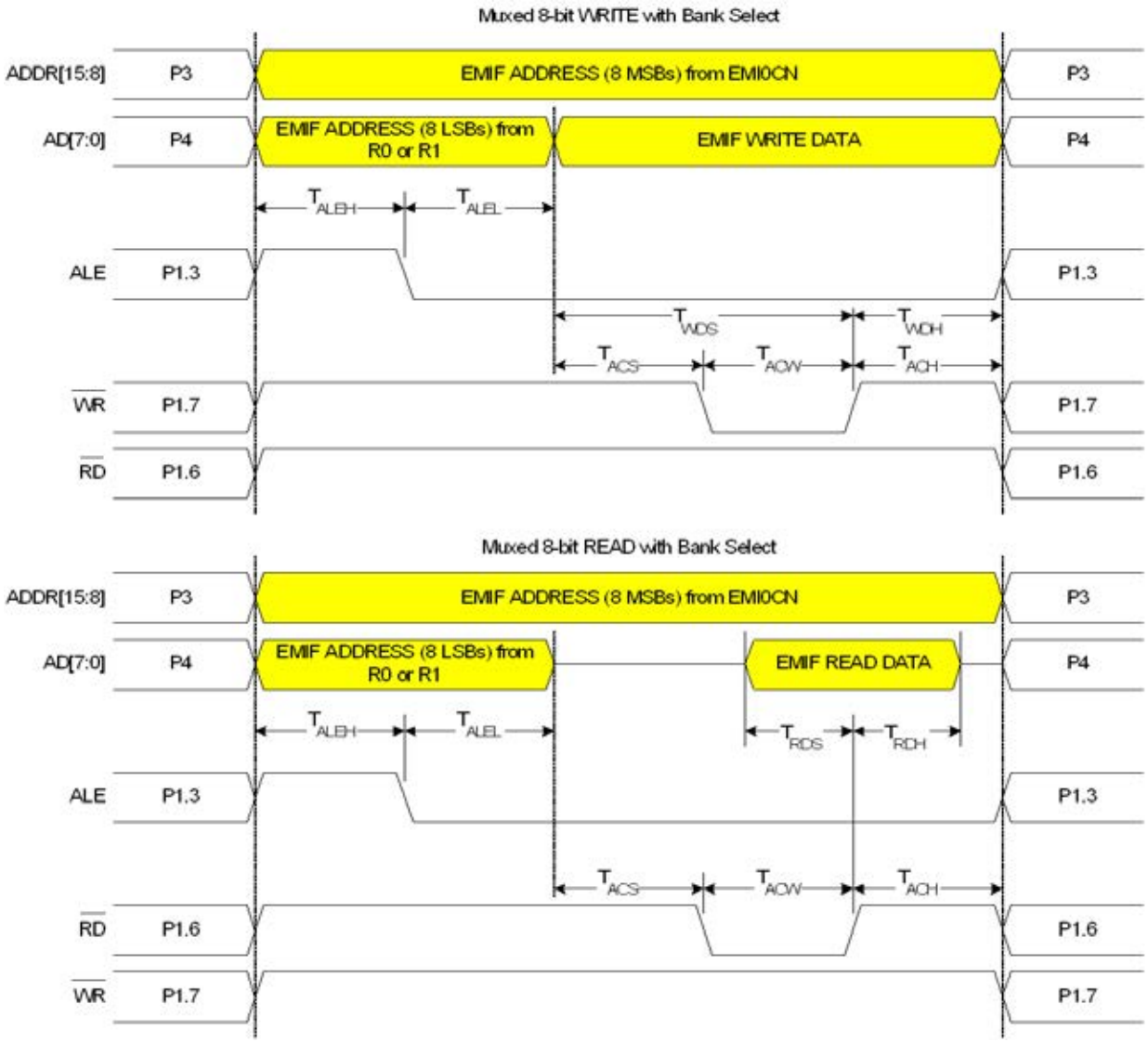

Figure 14.6. Non-Multiplexed 8-bit MOVX with Bank Select Timing

14.6.2. Multiplexed Mode

14.6.2.1. 16-bit MOVX: EMI0CF[4:2] = 001, 010, or 011

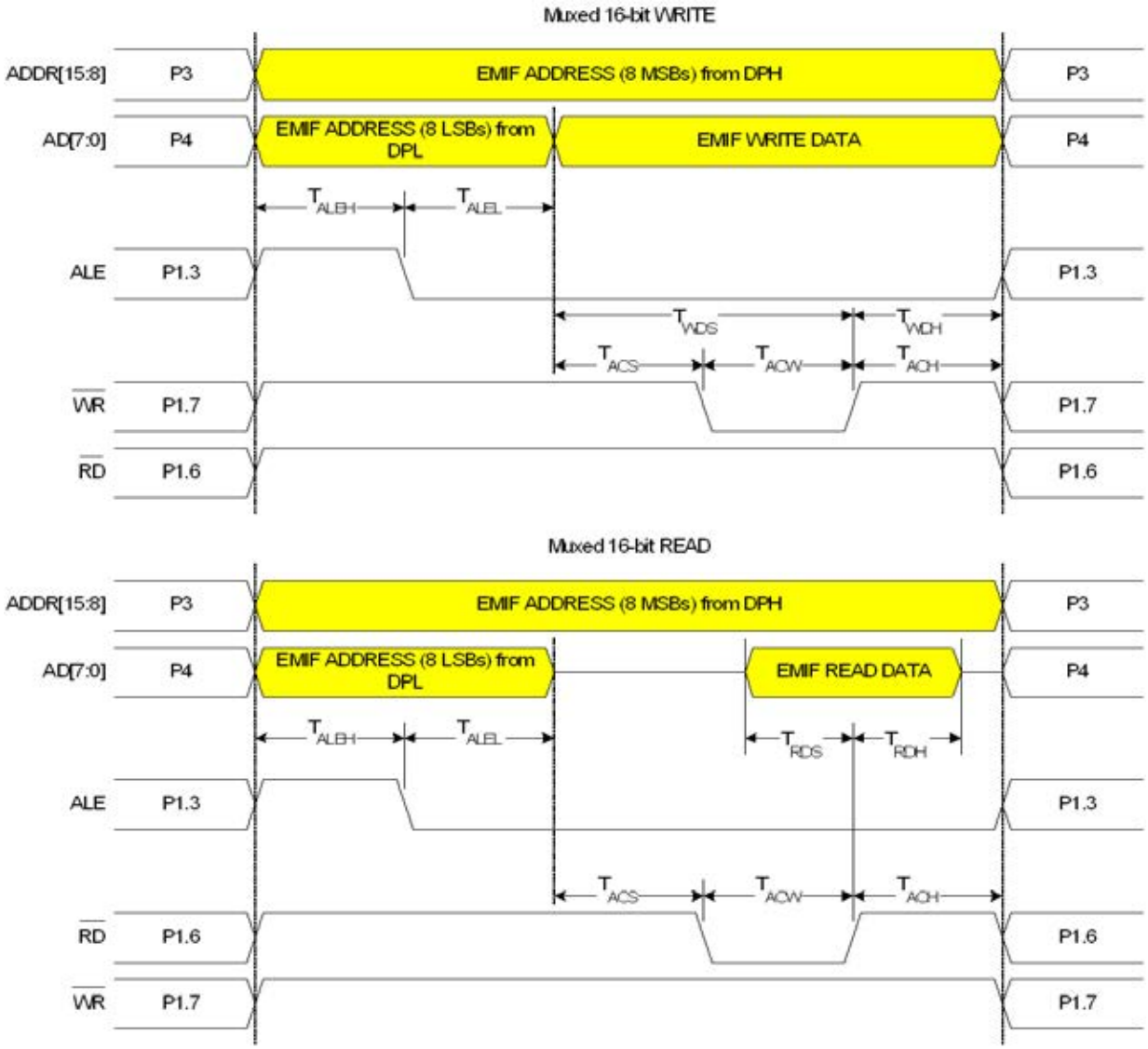

Figure 14.7. Multiplexed 16-bit MOVX Timing

14.6.2.2. 8-bit MOVX without Bank Select: EMI0CF[4:2] = 001 or 011

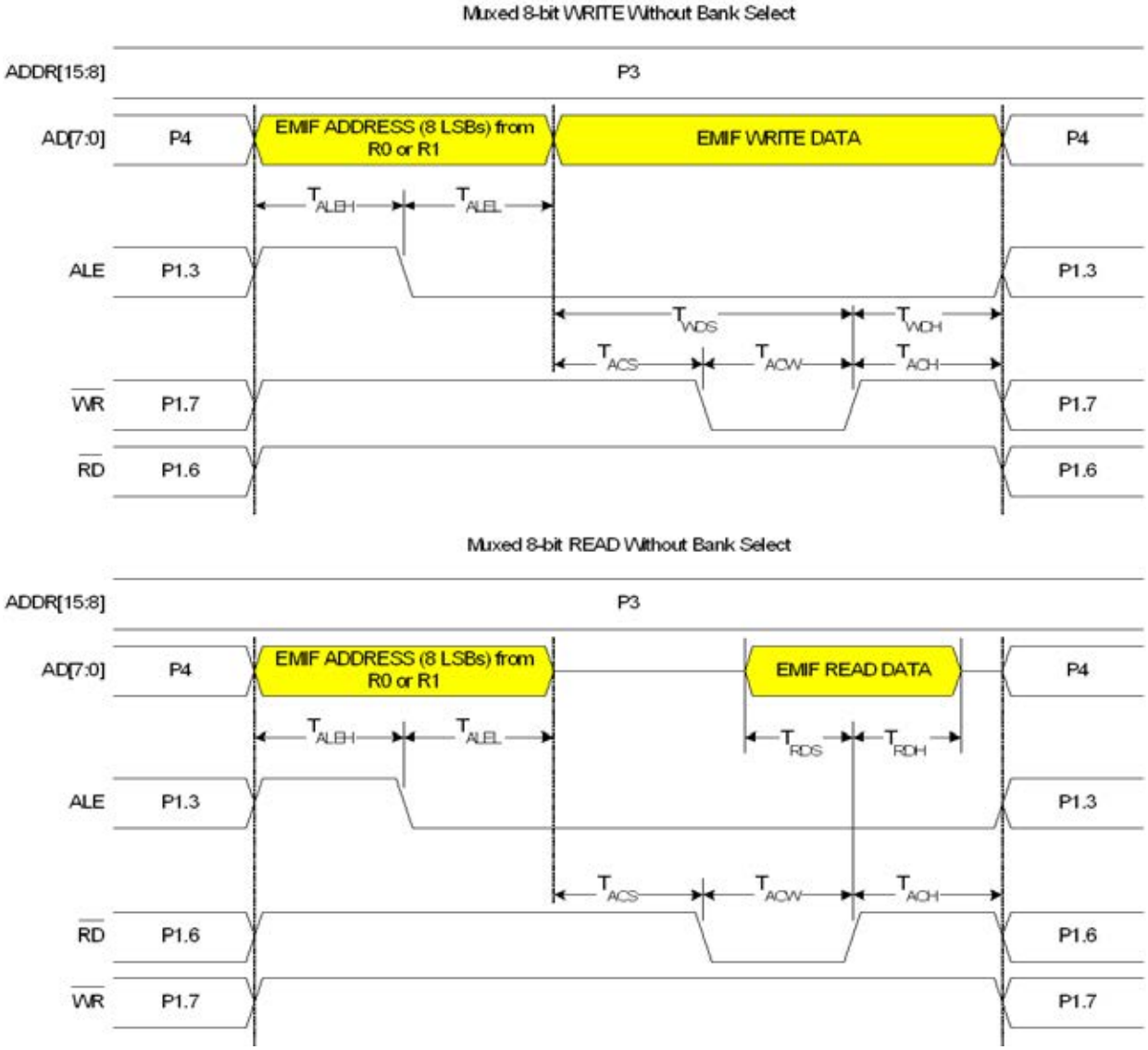

Figure 14.8. Multiplexed 8-bit MOVX without Bank Select Timing

14.6.2.3. 8-bit MOVX with Bank Select: EMI0CF[4:2] = 010

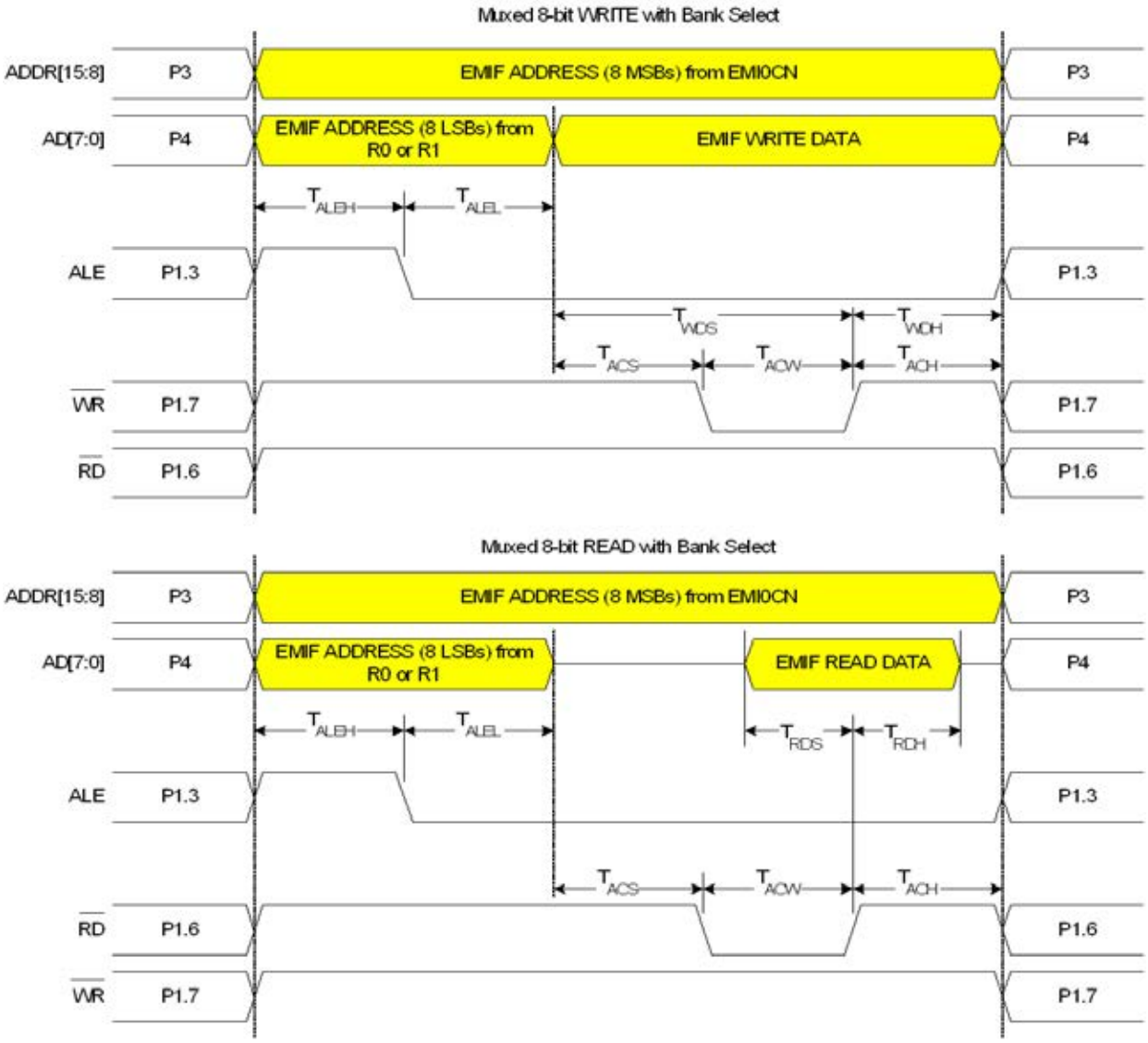

Figure 14.9. Multiplexed 8-bit MOVX with Bank Select Timing

Table 14.1. AC Parameters for External Memory Interface

Parameter	Description	Min*	Max*	Units
T_{ACS}	Address/Control Setup Time	0	3 x T_{SYSCLK}	ns
T_{ACW}	Address/Control Pulse Width	1 x T_{SYSCLK}	16 x T_{SYSCLK}	ns
T_{ACH}	Address/Control Hold Time	0	3 x T_{SYSCLK}	ns
T_{ALEH}	Address Latch Enable High Time	1 x T_{SYSCLK}	4 x T_{SYSCLK}	ns
T_{ALEL}	Address Latch Enable Low Time	1 x T_{SYSCLK}	4 x T_{SYSCLK}	ns
T_{WDS}	Write Data Setup Time	1 x T_{SYSCLK}	19 x T_{SYSCLK}	ns
T_{WDH}	Write Data Hold Time	0	3 x T_{SYSCLK}	ns
T_{RDS}	Read Data Setup Time	20		ns
T_{RDH}	Read Data Hold Time	0		ns
Note: T_{SYSCLK} is equal to one period of the device system clock (SYSCLK).				

15. Special Function Registers

The direct-access data memory locations from 0x80 to 0xFF constitute the special function registers (SFRs). The SFRs provide control and data exchange with the C8051F388/9/A/B's resources and peripherals. The CIP-51 controller core duplicates the SFRs found in a typical 8051 implementation as well as implementing additional SFRs used to configure and access the sub-systems unique to the C8051F388/9/A/B. This allows the addition of new functionality while retaining compatibility with the MCS-51™ instruction set. Table 15.1 lists the SFRs implemented in the C8051F388/9/A/B device family.

The SFR registers are accessed anytime the direct addressing mode is used to access memory locations from 0x80 to 0xFF. SFRs with addresses ending in 0x0 or 0x8 (e.g. P0, TCON, SCON0, IE, etc.) are bit-addressable as well as byte-addressable. All other SFRs are byte-addressable only. Unoccupied addresses in the SFR space are reserved for future use. Accessing these areas will have an indeterminate effect and should be avoided. Refer to the corresponding pages of the data sheet, as indicated in Table 15.2, for a detailed description of each register.

15.1. SFR Paging

The CIP-51 features SFR paging, allowing the device to map many SFRs into the 0x80 to 0xFF memory address space. The SFR memory space has 256 pages. In this way, each memory location from 0x80 to 0xFF can access up to 256 SFRs. The C8051F388/9/A/B devices utilize two SFR pages: 0x0, and 0xF. Most SFRs are available on both pages. SFR pages are selected using the Special Function Register Page Selection register, SFRPAGE. The procedure for reading and writing an SFR is as follows:

1. Select the appropriate SFR page number using the SFRPAGE register.
2. Use direct accessing mode to read or write the special function register (MOV instruction).

Important Note: When reading or writing SFRs that are not available on all pages within an ISR, it is recommended to save the state of the SFRPAGE register on ISR entry, and restore state on exit.

SFR Definition 15.1. SFRPAGE: SFR Page

Bit	7	6	5	4	3	2	1	0
Name	SFRPAGE[7:0]							
Type	R/W							
Reset	0	0	0	0	0	0	0	0

SFR Address = 0xBF; SFR Page = All Pages

Bit	Name	Function
7:0	SFRPAGE[7:0]	**SFR Page Bits.** Represents the SFR Page the C8051 core uses when reading or modifying SFRs. Write: Sets the SFR Page. Read: Byte is the SFR page the C8051 core is using.

Table 15.1. Special Function Register (SFR) Memory Map

Address	Page	0(8)	1(9)	2(A)	3(B)	4(C)	5(D)	6(E)	7(F)
F8		SPI0CN	PCA0L	PCA0H	PCA0CPL0	PCA0CPH0	PCA0CPL4	PCA0CPH4	VDM0CN
F0		B	P0MDIN	P1MDIN	P2MDIN	P3MDIN	P4MDIN	EIP1	EIP2
E8		ADC0CN	PCA0CPL1	PCA0CPH1	PCA0CPL2	PCA0CPH2	PCA0CPL3	PCA0CPH3	RSTSRC
E0	0	ACC	XBR0	XBR1	XBR2	IT01CF	SMOD1	EIE1	EIE2
	F					CKCON1			
D8		PCA0CN	PCA0MD	PCA0CPM0	PCA0CPM1	PCA0CPM2	PCA0CPM3	PCA0CPM4	P3SKIP
D0		PSW	REF0CN	SCON1	SBUF1	P0SKIP	P1SKIP	P2SKIP	
C8	0	TMR2CN	REG01CN	TMR2RLL	TMR2RLH	TMR2L	TMR2H	SMB0ADM	SMB0ADR
	F	TMR5CN		TMR5RLL	TMR5RLH	TMR5L	TMR5H	SMB1ADM	SMB1ADR
C0	0	SMB0CN	SMB0CF	SMB0DAT	ADC0GTL	ADC0GTH	ADC0LTL	ADC0LTH	P4
	F	SMB1CN	SMB1CF	SMB1DAT					
B8	0	IP	CLKMUL	AMX0N	AMX0P	ADC0CF	ADC0L	ADC0H	SFRPAGE
	F		SMBTC						
B0		P3	OSCXCN	OSCICN	OSCICL	SBRLL1	SBRLH1	FLSCL	FLKEY
A8		IE	CLKSEL	EMI0CN		SBCON1		P4MDOUT	PFE0CN
A0		P2	SPI0CFG	SPI0CKR	SPI0DAT	P0MDOUT	P1MDOUT	P2MDOUT	P3MDOUT
98		SCON0	SBUF0	CPT1CN	CPT0CN	CPT1MD	CPT0MD	CPT1MX	CPT0MX
90	0	P1	TMR3CN	TMR3RLL	TMR3RLH	TMR3L	TMR3H		
	F		TMR4CN	TMR4RLL	TMR4RLH	TMR4L	TMR4H		
88		TCON	TMOD	TL0	TL1	TH0	TH1	CKCON	PSCTL
80		P0	SP	DPL	DPH	EMI0TC	EMI0CF	OSCLCN	PCON
		0(8)	1(9)	2(A)	3(B)	4(C)	5(D)	6(E)	7(F)

Notes:
1. SFR Addresses ending in 0x0 or 0x8 are bit-addressable locations and can be used with bitwise instructions.
2. Unless indicated otherwise, SFRs are available on both page 0 and page F.

Table 15.2. Special Function Registers

SFRs are listed in alphabetical order. All undefined SFR locations are reserved

Register	Address	Page	Description	Page
ACC	0xE0	All Pages	Accumulator	82
ADC0CF	0xBC	All Pages	ADC0 Configuration	49
ADC0CN	0xE8	All Pages	ADC0 Control	51
ADC0GTH	0xC4	All Pages	ADC0 Greater-Than Compare High	52
ADC0GTL	0xC3	All Pages	ADC0 Greater-Than Compare Low	52
ADC0H	0xBE	All Pages	ADC0 High	50
ADC0L	0xBD	All Pages	ADC0 Low	50
ADC0LTH	0xC6	All Pages	ADC0 Less-Than Compare Word High	53
ADC0LTL	0xC5	All Pages	ADC0 Less-Than Compare Word Low	53
AMX0N	0xBA	All Pages	AMUX0 Negative Channel Select	57
AMX0P	0xBB	All Pages	AMUX0 Positive Channel Select	56
B	0xF0	All Pages	B Register	82
CKCON	0x8E	All Pages	Clock Control	225
CKCON1	0xE4	F	Clock Control 1	226
CLKMUL	0xB9	0	Clock Multiplier	141
CLKSEL	0xA9	All Pages	Clock Select	138
CPT0CN	0x9B	All Pages	Comparator0 Control	63
CPT0MD	0x9D	All Pages	Comparator0 Mode Selection	64
CPT0MX	0x9F	All Pages	Comparator0 MUX Selection	68
CPT1CN	0x9A	All Pages	Comparator1 Control	65
CPT1MD	0x9C	All Pages	Comparator1 Mode Selection	66
CPT1MX	0x9E	All Pages	Comparator1 MUX Selection	69
DPH	0x83	All Pages	Data Pointer High	81
DPL	0x82	All Pages	Data Pointer Low	81
EIE1	0xE6	All Pages	Extended Interrupt Enable 1	117
EIE2	0xE7	All Pages	Extended Interrupt Enable 2	119
EIP1	0xF6	All Pages	Extended Interrupt Priority 1	118
EIP2	0xF7	All Pages	Extended Interrupt Priority 2	120
EMI0CF	0x85	All Pages	External Memory Interface Configuration	91
EMI0CN	0xAA	All Pages	External Memory Interface Control	90
EMI0TC	0x84	All Pages	External Memory Interface Timing	97
FLKEY	0xB7	All Pages	Flash Lock and Key	134
FLSCL	0xB6	All Pages	Flash Scale	135

Table 15.2. Special Function Registers (Continued)

SFRs are listed in alphabetical order. All undefined SFR locations are reserved

Register	Address	Page	Description	Page
IE	0xA8	All Pages	Interrupt Enable	115
IP	0xB8	All Pages	Interrupt Priority	116
IT01CF	0xE4	0	INT0/INT1 Configuration	122
OSCICL	0xB3	All Pages	Internal Oscillator Calibration	139
OSCICN	0xB2	All Pages	Internal Oscillator Control	140
OSCLCN	0x86	All Pages	Internal Low-Frequency Oscillator Control	142
OSCXCN	0xB1	All Pages	External Oscillator Control	146
P0	0x80	All Pages	Port 0 Latch	156
P0MDIN	0xF1	All Pages	Port 0 Input Mode Configuration	156
P0MDOUT	0xA4	All Pages	Port 0 Output Mode Configuration	157
P0SKIP	0xD4	All Pages	Port 0 Skip	157
P1	0x90	All Pages	Port 1 Latch	158
P1MDIN	0xF2	All Pages	Port 1 Input Mode Configuration	158
P1MDOUT	0xA5	All Pages	Port 1 Output Mode Configuration	159
P1SKIP	0xD5	All Pages	Port 1 Skip	159
P2	0xA0	All Pages	Port 2 Latch	160
P2MDIN	0xF3	All Pages	Port 2 Input Mode Configuration	160
P2MDOUT	0xA6	All Pages	Port 2 Output Mode Configuration	161
P2SKIP	0xD6	All Pages	Port 2 Skip	161
P3	0xB0	All Pages	Port 3 Latch	162
P3MDIN	0xF4	All Pages	Port 3 Input Mode Configuration	162
P3MDOUT	0xA7	All Pages	Port 3 Output Mode Configuration	163
P3SKIP	0xDF	All Pages	Port 3Skip	163
P4	0xC7	All Pages	Port 4 Latch	164
P4MDIN	0xF5	All Pages	Port 4 Input Mode Configuration	164
P4MDOUT	0xAE	All Pages	Port 4 Output Mode Configuration	165
PCA0CN	0xD8	All Pages	PCA Control	272
PCA0CPH0	0xFC	All Pages	PCA Capture 0 High	276
PCA0CPH1	0xEA	All Pages	PCA Capture 1 High	276
PCA0CPH2	0xEC	All Pages	PCA Capture 2 High	276
PCA0CPH3	0xEE	All Pages	PCA Capture 3High	276
PCA0CPH4	0xFE	All Pages	PCA Capture 4 High	276
PCA0CPL0	0xFB	All Pages	PCA Capture 0 Low	276
PCA0CPL1	0xE9	All Pages	PCA Capture 1 Low	276

Table 15.2. Special Function Registers (Continued)

SFRs are listed in alphabetical order. All undefined SFR locations are reserved

Register	Address	Page	Description	Page
PCA0CPL2	0xEB	All Pages	PCA Capture 2 Low	276
PCA0CPL3	0xED	All Pages	PCA Capture 3 Low	276
PCA0CPL4	0xFD	All Pages	PCA Capture 4 Low	276
PCA0CPM0	0xDA	All Pages	PCA Module 0 Mode Register	274
PCA0CPM1	0xDB	All Pages	PCA Module 1 Mode Register	274
PCA0CPM2	0xDC	All Pages	PCA Module 2 Mode Register	274
PCA0CPM3	0xDD	All Pages	PCA Module 3 Mode Register	274
PCA0CPM4	0xDE	All Pages	PCA Module 4 Mode Register	274
PCA0H	0xFA	All Pages	PCA Counter High	275
PCA0L	0xF9	All Pages	PCA Counter Low	275
PCA0MD	0xD9	All Pages	PCA Mode	273
PCON	0x87	All Pages	Power Control	74
PFE0CN	0xAF	All Pages	Prefetch Engine Control	84
PSCTL	0x8F	All Pages	Program Store R/W Control	133
PSW	0xD0	All Pages	Program Status Word	83
REF0CN	0xD1	All Pages	Voltage Reference Control	59
REG01CN	0xC9	All Pages	Voltage Regulator 0 and 1 Control	71
RSTSRC	0xEF	All Pages	Reset Source Configuration/Status	128
SBCON1	0xAC	All Pages	UART1 Baud Rate Generator Control	209
SBRLH1	0xB5	All Pages	UART1 Baud Rate Generator High	209
SBRLL1	0xB4	All Pages	UART1 Baud Rate Generator Low	210
SBUF0	0x99	All Pages	UART0 Data Buffer	199
SBUF1	0xD3	All Pages	UART1 Data Buffer	208
SCON0	0x98	All Pages	UART0 Control	198
SCON1	0xD2	All Pages	UART1 Control	206
SFRPAGE	0xBF	All Pages	SFR Page Select	105
SMB0ADM	0xCE	0	SMBus0 Address Mask	180
SMB0ADR	0xCF	0	SMBus0 Address	179
SMB0CF	0xC1	0	SMBus0 Configuration	172
SMB0CN	0xC0	0	SMBus0 Control	176
SMB0DAT	0xC2	0	SMBus0 Data	182
SMB1ADM	0xCE	F	SMBus1 Address Mask	181
SMB1ADR	0xCF	F	SMBus1 Address	180
SMB1CF	0xC1	F	SMBus1 Configuration	172

Table 15.2. Special Function Registers (Continued)

SFRs are listed in alphabetical order. All undefined SFR locations are reserved

Register	Address	Page	Description	Page
SMB1CN	0xC0	F	SMBus1 Control	177
SMB1DAT	0xC2	F	SMBus1 Data	183
SMBTC	0xB9	F	SMBus0/1 Timing Control	174
SMOD1	0xE5	All Pages	UART1 Mode	207
SP	0x81	All Pages	Stack Pointer	82
SPI0CFG	0xA1	All Pages	SPI Configuration	218
SPI0CKR	0xA2	All Pages	SPI Clock Rate Control	220
SPI0CN	0xF8	All Pages	SPI Control	219
SPI0DAT	0xA3	All Pages	SPI Data	220
TCON	0x88	All Pages	Timer/Counter Control	231
TH0	0x8C	All Pages	Timer/Counter 0 High	234
TH1	0x8D	All Pages	Timer/Counter 1 High	234
TL0	0x8A	All Pages	Timer/Counter 0 Low	233
TL1	0x8B	All Pages	Timer/Counter 1 Low	233
TMOD	0x89	All Pages	Timer/Counter Mode	232
TMR2CN	0xC8	0	Timer/Counter 2 Control	239
TMR2H	0xCD	0	Timer/Counter 2 High	241
TMR2L	0xCC	0	Timer/Counter 2 Low	240
TMR2RLH	0xCB	0	Timer/Counter 2 Reload High	240
TMR2RLL	0xCA	0	Timer/Counter 2 Reload Low	240
TMR3CN	0x91	0	Timer/Counter 3 Control	246
TMR3H	0x95	0	Timer/Counter 3 High	248
TMR3L	0x94	0	Timer/Counter 3 Low	247
TMR3RLH	0x93	0	Timer/Counter 3 Reload High	247
TMR3RLL	0x92	0	Timer/Counter 3 Reload Low	247
TMR4CN	0x91	F	Timer/Counter 4 Control	251
TMR4H	0x95	F	Timer/Counter 4 High	253
TMR4L	0x94	F	Timer/Counter 4 Low	252
TMR4RLH	0x93	F	Timer/Counter 4 Reload High	252
TMR4RLL	0x92	F	Timer/Counter 4 Reload Low	252
TMR5CN	0xC8	F	Timer/Counter 5 Control	256
TMR5H	0xCD	F	Timer/Counter 5 High	258
TMR5L	0xCC	F	Timer/Counter 5 Low	257
TMR5RLH	0xCB	F	Timer/Counter 5 Reload High	257

Table 15.2. Special Function Registers (Continued)

SFRs are listed in alphabetical order. All undefined SFR locations are reserved

Register	Address	Page	Description	Page
TMR5RLL	0xCA	F	Timer/Counter 5 Reload Low	257
VDM0CN	0xFF	All Pages	V_{DD} Monitor Control	126
XBR0	0xE1	All Pages	Port I/O Crossbar Control 0	153
XBR1	0xE2	All Pages	Port I/O Crossbar Control 1	154
XBR2	0xE3	All Pages	Port I/O Crossbar Control 2	155

16. Interrupts

The C8051F388/9/A/B include an extended interrupt system supporting multiple interrupt sources with two priority levels. The allocation of interrupt sources between on-chip peripherals and external inputs pins varies according to the specific version of the device. Each interrupt source has one or more associated interrupt-pending flag(s) located in an SFR. When a peripheral or external source meets a valid interrupt condition, the associated interrupt-pending flag is set to logic 1.

If interrupts are enabled for the source, an interrupt request is generated when the interrupt-pending flag is set. As soon as execution of the current instruction is complete, the CPU generates an LCALL to a predetermined address to begin execution of an interrupt service routine (ISR). Each ISR must end with an RETI instruction, which returns program execution to the next instruction that would have been executed if the interrupt request had not occurred. If interrupts are not enabled, the interrupt-pending flag is ignored by the hardware and program execution continues as normal. (The interrupt-pending flag is set to logic 1 regardless of the interrupt's enable/disable state.)

Each interrupt source can be individually enabled or disabled through the use of an associated interrupt enable bit in an SFR (IE, EIE1, or EIE2). However, interrupts must first be globally enabled by setting the EA bit (IE.7) to logic 1 before the individual interrupt enables are recognized. Setting the EA bit to logic 0 disables all interrupt sources regardless of the individual interrupt-enable settings.

Note: Any instruction that clears a bit to disable an interrupt should be immediately followed by an instruction that has two or more opcode bytes. Using EA (global interrupt enable) as an example:

```
// in 'C':
EA = 0; // clear EA bit.
EA = 0; // this is a dummy instruction with two-byte opcode.

; in assembly:
CLR EA ; clear EA bit.
CLR EA ; this is a dummy instruction with two-byte opcode.
```

For example, if an interrupt is posted during the execution phase of a "CLR EA" opcode (or any instruction which clears a bit to disable an interrupt source), and the instruction is followed by a single-cycle instruction, the interrupt may be taken. However, a read of the enable bit will return a 0 inside the interrupt service routine. When the bit-clearing opcode is followed by a multi-cycle instruction, the interrupt will not be taken.

Some interrupt-pending flags are automatically cleared by the hardware when the CPU vectors to the ISR. However, most are not cleared by the hardware and must be cleared by software before returning from the ISR. If an interrupt-pending flag remains set after the CPU completes the return-from-interrupt (RETI) instruction, a new interrupt request will be generated immediately and the CPU will re-enter the ISR after the completion of the next instruction.

16.1. MCU Interrupt Sources and Vectors

The C8051F388/9/A/B MCUs support several interrupt sources. Software can simulate an interrupt by setting any interrupt-pending flag to logic 1. If interrupts are enabled for the flag, an interrupt request will be generated and the CPU will vector to the ISR address associated with the interrupt-pending flag. MCU interrupt sources, associated vector addresses, priority order and control bits are summarized in Table 16.1. Refer to the datasheet section associated with a particular on-chip peripheral for information regarding valid interrupt conditions for the peripheral and the behavior of its interrupt-pending flag(s).

16.1.1. Interrupt Priorities

Each interrupt source can be individually programmed to one of two priority levels: low or high. A low priority interrupt service routine can be preempted by a high priority interrupt. A high priority interrupt cannot be preempted. Each interrupt has an associated interrupt priority bit in an SFR (IP, EIP1, or EIP2) used to configure its priority level. Low priority is the default. If two interrupts are recognized simultaneously, the interrupt with the higher priority is serviced first. If both interrupts have the same priority level, a fixed priority order is used to arbitrate, given in Table 16.1.

16.1.2. Interrupt Latency

Interrupt response time depends on the state of the CPU when the interrupt occurs. Pending interrupts are sampled and priority decoded each system clock cycle. Therefore, the fastest possible response time is 6 system clock cycles: 1 clock cycle to detect the interrupt and 5 clock cycles to complete the LCALL to the ISR. If an interrupt is pending when a RETI is executed, a single instruction is executed before an LCALL is made to service the pending interrupt. Therefore, the maximum response time for an interrupt (when no other interrupt is currently being serviced or the new interrupt is of greater priority) occurs when the CPU is performing an RETI instruction followed by a DIV as the next instruction. In this case, the response time is 20 system clock cycles: 1 clock cycle to detect the interrupt, 6 clock cycles to execute the RETI, 8 clock cycles to complete the DIV instruction and 5 clock cycles to execute the LCALL to the ISR. If the CPU is executing an ISR for an interrupt with equal or higher priority, the new interrupt will not be serviced until the current ISR completes, including the RETI and following instruction.

Note that the CPU is stalled during Flash write operations. Interrupt service latency will be increased for interrupts occurring while the CPU is stalled. The latency for these situations will be determined by the standard interrupt service procedure (as described above) and the amount of time the CPU is stalled.

16.2. Interrupt Register Descriptions

The SFRs used to enable the interrupt sources and set their priority level are described in this section. Refer to the data sheet section associated with a particular on-chip peripheral for information regarding valid interrupt conditions for the peripheral and the behavior of its interrupt-pending flag(s).

Table 16.1. Interrupt Summary

Interrupt Source	Interrupt Vector	Priority Order	Pending Flag	Bit Address?	Cleared by HW?	Enable Flag	Priority Control
Reset	0x0000	Top	None	N/A	N/A	Always Enabled	Always Highest
External Interrupt 0 ($\overline{\text{INT0}}$)	0x0003	0	IE0 (TCON.1)	Y	Y	EX0 (IE.0)	PX0 (IP.0)
Timer 0 Overflow	0x000B	1	TF0 (TCON.5)	Y	Y	ET0 (IE.1)	PT0 (IP.1)
External Interrupt 1 ($\overline{\text{INT1}}$)	0x0013	2	IE1 (TCON.3)	Y	Y	EX1 (IE.2)	PX1 (IP.2)
Timer 1 Overflow	0x001B	3	TF1 (TCON.7)	Y	Y	ET1 (IE.3)	PT1 (IP.3)
UART0	0x0023	4	RI0 (SCON0.0) TI0 (SCON0.1)	Y	N	ES0 (IE.4)	PS0 (IP.4)
Timer 2 Overflow	0x002B	5	TF2H (TMR2CN.7) TF2L (TMR2CN.6)	Y	N	ET2 (IE.5)	PT2 (IP.5)
SPI0	0x0033	6	SPIF (SPI0CN.7) WCOL (SPI0CN.6) MODF (SPI0CN.5) RXOVRN (SPI0CN.4)	Y	N	ESPI0 (IE.6)	PSPI0 (IP.6)
SMB0	0x003B	7	SI (SMB0CN.0)	Y	N	ESMB0 (EIE1.0)	PSMB0 (EIP1.0)
Reserved	0x0043	8	N/A	N/A	N/A	N/A	N/A
ADC0 Window Compare	0x004B	9	AD0WINT (ADC0CN.3)	Y	N	EWADC0 (EIE1.2)	PWADC0 (EIP1.2)
ADC0 Conversion Complete	0x0053	10	AD0INT (ADC0CN.5)	Y	N	EADC0 (EIE1.3)	PADC0 (EIP1.3)
Programmable Counter Array	0x005B	11	CF (PCA0CN.7) CCFn (PCA0CN.n)	Y	N	EPCA0 (EIE1.4)	PPCA0 (EIP1.4)
Comparator0	0x0063	12	CP0FIF (CPT0CN.4) CP0RIF (CPT0CN.5)	N	N	ECP0 (EIE1.5)	PCP0 (EIP1.5)
Comparator1	0x006B	13	CP1FIF (CPT1CN.4) CP1RIF (CPT1CN.5)	N	N	ECP1 (EIE1.6)	PCP1 (EIP1.6)
Timer 3 Overflow	0x0073	14	TF3H (TMR3CN.7) TF3L (TMR3CN.6)	N	N	ET3 (EIE1.7)	PT3 (EIP1.7)
INT2 Level	0x007B	15	N/A	N/A	N/A	EINT2 (EIE2.0)	PINT2 (EIP2.0)
UART1	0x0083	16	RI1 (SCON1.0) TI1 (SCON1.1)	N	N	ES1 (EIE2.1)	PS1 (EIP2.1)
Reserved	0x008B	17	N/A	N/A	N/A	N/A	N/A
SMB1	0x0093	18	SI (SMB1CN.0)	Y	N	ESMB1 (EIE2.3)	PSMB1 (EIP2.3)
Timer 4 Overflow	0x009B	19	TF4H (TMR4CN.7) TF4L (TMR4CN.6)	N	N	ET4 (EIE2.4)	PT4 (E!P2.4)
Timer 5 Overflow	0x00A3	20	TF5H (TMR5CN.7) TF5L (TMR5CN.6)	Y	N	ET5 (EIE2.5)	PT5 (E!P2.5)

SFR Definition 16.1. IE: Interrupt Enable

Bit	7	6	5	4	3	2	1	0
Name	EA	ESPI0	ET2	ES0	ET1	EX1	ET0	EX0
Type	R/W	R/W	R/W	R/W	R/W	R/W	R/W	R/W
Reset	0	0	0	0	0	0	0	0

SFR Address = 0xA8; SFR Page = All Pages; Bit-Addressable

Bit	Name	Function
7	EA	**Enable All Interrupts.** Globally enables/disables all interrupts. It overrides individual interrupt mask settings. 0: Disable all interrupt sources. 1: Enable each interrupt according to its individual mask setting.
6	ESPI0	**Enable Serial Peripheral Interface (SPI0) Interrupt.** This bit sets the masking of the SPI0 interrupts. 0: Disable all SPI0 interrupts. 1: Enable interrupt requests generated by SPI0.
5	ET2	**Enable Timer 2 Interrupt.** This bit sets the masking of the Timer 2 interrupt. 0: Disable Timer 2 interrupt. 1: Enable interrupt requests generated by the TF2L or TF2H flags.
4	ES0	**Enable UART0 Interrupt.** This bit sets the masking of the UART0 interrupt. 0: Disable UART0 interrupt. 1: Enable UART0 interrupt.
3	ET1	**Enable Timer 1 Interrupt.** This bit sets the masking of the Timer 1 interrupt. 0: Disable all Timer 1 interrupt. 1: Enable interrupt requests generated by the TF1 flag.
2	EX1	**Enable External Interrupt 1.** This bit sets the masking of External Interrupt 1. 0: Disable external interrupt 1. 1: Enable interrupt requests generated by the $\overline{\text{INT1}}$ input.
1	ET0	**Enable Timer 0 Interrupt.** This bit sets the masking of the Timer 0 interrupt. 0: Disable all Timer 0 interrupt. 1: Enable interrupt requests generated by the TF0 flag.
0	EX0	**Enable External Interrupt 0.** This bit sets the masking of External Interrupt 0. 0: Disable external interrupt 0. 1: Enable interrupt requests generated by the $\overline{\text{INT0}}$ input.

SFR Definition 16.2. IP: Interrupt Priority

Bit	7	6	5	4	3	2	1	0
Name		PSPI0	PT2	PS0	PT1	PX1	PT0	PX0
Type	R	R/W	R/W	R/W	R/W	R/W	R/W	R/W
Reset	1	0	0	0	0	0	0	0

SFR Address = 0xB8; SFR Page = All Pages; Bit-Addressable

Bit	Name	Function
7	Unused	Read = 1b, Write = Don't Care.
6	PSPI0	**Serial Peripheral Interface (SPI0) Interrupt Priority Control.** This bit sets the priority of the SPI0 interrupt. 0: SPI0 interrupt set to low priority level. 1: SPI0 interrupt set to high priority level.
5	PT2	**Timer 2 Interrupt Priority Control.** This bit sets the priority of the Timer 2 interrupt. 0: Timer 2 interrupt set to low priority level. 1: Timer 2 interrupt set to high priority level.
4	PS0	**UART0 Interrupt Priority Control.** This bit sets the priority of the UART0 interrupt. 0: UART0 interrupt set to low priority level. 1: UART0 interrupt set to high priority level.
3	PT1	**Timer 1 Interrupt Priority Control.** This bit sets the priority of the Timer 1 interrupt. 0: Timer 1 interrupt set to low priority level. 1: Timer 1 interrupt set to high priority level.
2	PX1	**External Interrupt 1 Priority Control.** This bit sets the priority of the External Interrupt 1 interrupt. 0: External Interrupt 1 set to low priority level. 1: External Interrupt 1 set to high priority level.
1	PT0	**Timer 0 Interrupt Priority Control.** This bit sets the priority of the Timer 0 interrupt. 0: Timer 0 interrupt set to low priority level. 1: Timer 0 interrupt set to high priority level.
0	PX0	**External Interrupt 0 Priority Control.** This bit sets the priority of the External Interrupt 0 interrupt. 0: External Interrupt 0 set to low priority level. 1: External Interrupt 0 set to high priority level.

SFR Definition 16.3. EIE1: Extended Interrupt Enable 1

Bit	7	6	5	4	3	2	1	0
Name	ET3	ECP1	ECP0	EPCA0	EADC0	EWADC0	Reserved	ESMB0
Type	R/W	R/W	R/W	R/W	R/W	R/W	R/W	R/W
Reset	0	0	0	0	0	0	0	0

SFR Address = 0xE6; SFR Page = All Pages

Bit	Name	Function
7	ET3	**Enable Timer 3 Interrupt.** This bit sets the masking of the Timer 3 interrupt. 0: Disable Timer 3 interrupts. 1: Enable interrupt requests generated by the TF3L or TF3H flags.
6	ECP1	**Enable Comparator1 (CP1) Interrupt.** This bit sets the masking of the CP1 interrupt. 0: Disable CP1 interrupts. 1: Enable interrupt requests generated by the CP1RIF or CP1FIF flags.
5	ECP0	**Enable Comparator0 (CP0) Interrupt.** This bit sets the masking of the CP0 interrupt. 0: Disable CP0 interrupts. 1: Enable interrupt requests generated by the CP0RIF or CP0FIF flags.
4	EPCA0	**Enable Programmable Counter Array (PCA0) Interrupt.** This bit sets the masking of the PCA0 interrupts. 0: Disable all PCA0 interrupts. 1: Enable interrupt requests generated by PCA0.
3	EADC0	**Enable ADC0 Conversion Complete Interrupt.** This bit sets the masking of the ADC0 Conversion Complete interrupt. 0: Disable ADC0 Conversion Complete interrupt. 1: Enable interrupt requests generated by the AD0INT flag.
2	EWADC0	**Enable Window Comparison ADC0 Interrupt.** This bit sets the masking of ADC0 Window Comparison interrupt. 0: Disable ADC0 Window Comparison interrupt. 1: Enable interrupt requests generated by ADC0 Window Compare flag (AD0WINT).
1	Reserved	Read = 0b, Must Write 0b.
0	ESMB0	**Enable SMBus0 Interrupt.** This bit sets the masking of the SMB0 interrupt. 0: Disable all SMB0 interrupts. 1: Enable interrupt requests generated by SMB0.

SFR Definition 16.4. EIP1: Extended Interrupt Priority 1

Bit	7	6	5	4	3	2	1	0
Name	PT3	PCP1	PCP0	PPCA0	PADC0	PWADC0	Reserved	PSMB0
Type	R/W	R/W	R/W	R/W	R/W	R/W	R/W	R/W
Reset	0	0	0	0	0	0	0	0

SFR Address = 0xF6; SFR Page = All Pages

Bit	Name	Function
7	PT3	**Timer 3 Interrupt Priority Control.** This bit sets the priority of the Timer 3 interrupt. 0: Timer 3 interrupts set to low priority level. 1: Timer 3 interrupts set to high priority level.
6	PCP1	**Comparator1 (CP1) Interrupt Priority Control.** This bit sets the priority of the CP1 interrupt. 0: CP1 interrupt set to low priority level. 1: CP1 interrupt set to high priority level.
5	PCP0	**Comparator0 (CP0) Interrupt Priority Control.** This bit sets the priority of the CP0 interrupt. 0: CP0 interrupt set to low priority level. 1: CP0 interrupt set to high priority level.
4	PPCA0	**Programmable Counter Array (PCA0) Interrupt Priority Control.** This bit sets the priority of the PCA0 interrupt. 0: PCA0 interrupt set to low priority level. 1: PCA0 interrupt set to high priority level.
3	PADC0	**ADC0 Conversion Complete Interrupt Priority Control.** This bit sets the priority of the ADC0 Conversion Complete interrupt. 0: ADC0 Conversion Complete interrupt set to low priority level. 1: ADC0 Conversion Complete interrupt set to high priority level.
2	PWADC0	**ADC0 Window Comparator Interrupt Priority Control.** This bit sets the priority of the ADC0 Window interrupt. 0: ADC0 Window interrupt set to low priority level. 1: ADC0 Window interrupt set to high priority level.
1	Reserved	Read = 0b, Must Write 0b.
0	PSMB0	**SMBus0 Interrupt Priority Control.** This bit sets the priority of the SMB0 interrupt. 0: SMB0 interrupt set to low priority level. 1: SMB0 interrupt set to high priority level.

SFR Definition 16.5. EIE2: Extended Interrupt Enable 2

Bit	7	6	5	4	3	2	1	0
Name			ET5	ET4	ESMB1		ES1	EINT2
Type	R	R	R/W	R/W	R/W	R/W	R/W	R/W
Reset	0	0	0	0	0	0	0	0

SFR Address = 0xE7; SFR Page = All Pages

Bit	Name	Function
7:6	Unused	Read = 00b, Write = Don't Care.
5	ET5	**Enable Timer 5 Interrupt.** This bit sets the masking of the Timer 5 interrupt. 0: Disable Timer 5 interrupts. 1: Enable interrupt requests generated by the TF5L or TF5H flags.
4	ET4	**Enable Timer 4 Interrupt.** This bit sets the masking of the Timer 4 interrupt. 0: Disable Timer 4interrupts. 1: Enable interrupt requests generated by the TF4L or TF4H flags.
3	ESMB1	**Enable SMBus1 Interrupt.** This bit sets the masking of the SMB1 interrupt. 0: Disable all SMB1 interrupts. 1: Enable interrupt requests generated by SMB1.
2	Reserved	Must Write 0b.
1	ES1	**Enable UART1 Interrupt.** This bit sets the masking of the UART1 interrupt. 0: Disable UART1 interrupt. 1: Enable UART1 interrupt.
0	EINT2	**Enable INT2 Level Interrupt.** This bit sets the masking of the INT2 interrupt. 0: Disable all INT2 interrupts. 1: Enable interrupt requests generated by the INT2 level sense.

SFR Definition 16.6. EIP2: Extended Interrupt Priority 2

Bit	7	6	5	4	3	2	1	0
Name			PT5	PT4	PSMB1		PS1	PINT2
Type	R	R	R/W	R/W	R/W	R/W	R/W	R/W
Reset	0	0	0	0	0	0	0	0

SFR Address = 0xF7; SFR Page = All Pages

Bit	Name	Function
:6	Unused	Read = 00b, Write = Don't Care.
5	PT5	**Timer 5 Interrupt Priority Control.** This bit sets the priority of the Timer 5 interrupt. 0: Timer 5 interrupt set to low priority level. 1: Timer 5 interrupt set to high priority level.
4	PT4	**Timer 4 Interrupt Priority Control.** This bit sets the priority of the Timer 4 interrupt. 0: Timer 4 interrupt set to low priority level. 1: Timer 4 interrupt set to high priority level.
3	PSMB1	**SMBus1 Interrupt Priority Control.** This bit sets the priority of the SMB1 interrupt. 0: SMB1 interrupt set to low priority level. 1: SMB1 interrupt set to high priority level.
2	Reserved	Must Write 0b.
1	PS1	**UART1 Interrupt Priority Control.** This bit sets the priority of the UART1 interrupt. 0: UART1 interrupt set to low priority level. 1: UART1 interrupt set to high priority level.
0	PINT2	**INT2 Level Interrupt Priority Control.** This bit sets the masking of the INT2 interrupt. 0: INT2 interrupt set to low priority level. 1: INT2 interrupt set to high priority level.

16.3. $\overline{\text{INT0}}$ and $\overline{\text{INT1}}$ External Interrupt Sources

The $\overline{\text{INT0}}$ and $\overline{\text{INT1}}$ external interrupt sources are configurable as active high or low, edge or level sensitive. The IN0PL ($\overline{\text{INT0}}$ Polarity) and IN1PL ($\overline{\text{INT1}}$ Polarity) bits in the IT01CF register select active high or active low; the IT0 and IT1 bits in TCON (Section “25.1. Timer 0 and Timer 1” on page 227) select level or edge sensitive. The table below lists the possible configurations.

IT0	IN0PL	$\overline{\text{INT0}}$ Interrupt
1	0	Active low, edge sensitive
1	1	Active high, edge sensitive
0	0	Active low, level sensitive
0	1	Active high, level sensitive

IT1	IN1PL	$\overline{\text{INT1}}$ Interrupt
1	0	Active low, edge sensitive
1	1	Active high, edge sensitive
0	0	Active low, level sensitive
0	1	Active high, level sensitive

$\overline{\text{INT0}}$ and $\overline{\text{INT1}}$ are assigned to Port pins as defined in the IT01CF register (see SFR Definition 16.7). Note that $\overline{\text{INT0}}$ and $\overline{\text{INT0}}$ Port pin assignments are independent of any Crossbar assignments. $\overline{\text{INT0}}$ and $\overline{\text{INT1}}$ will monitor their assigned Port pins without disturbing the peripheral that was assigned the Port pin via the Crossbar. To assign a Port pin only to $\overline{\text{INT0}}$ and/or $\overline{\text{INT1}}$, configure the Crossbar to skip the selected pin(s). This is accomplished by setting the associated bit in register PnSKIP (see Section “20.1. Priority Crossbar Decoder” on page 148 for complete details on configuring the Crossbar).

IE0 (TCON.1) and IE1 (TCON.3) serve as the interrupt-pending flags for the $\overline{\text{INT0}}$ and $\overline{\text{INT1}}$ external interrupts, respectively. If an $\overline{\text{INT0}}$ or $\overline{\text{INT1}}$ external interrupt is configured as edge-sensitive, the corresponding interrupt-pending flag is automatically cleared by the hardware when the CPU vectors to the ISR. When configured as level sensitive, the interrupt-pending flag remains logic 1 while the input is active as defined by the corresponding polarity bit (IN0PL or IN1PL); the flag remains logic 0 while the input is inactive. The external interrupt source must hold the input active until the interrupt request is recognized. It must then deactivate the interrupt request before execution of the ISR completes or another interrupt request will be generated.

SFR Definition 16.7. IT01CF: $\overline{\text{INT0}}$/$\overline{\text{INT1}}$ Configuration

Bit	7	6	5	4	3	2	1	0
Name	IN1PL	IN1SL[2:0]			IN0PL	IN0SL[2:0]		
Type	R/W	R/W			R/W	R/W		
Reset	0	0	0	0	0	0	0	1

SFR Address = 0xE4; SFR Page = 0

Bit	Name	Function
7	IN1PL	**$\overline{\text{INT1}}$ Polarity.** 0: $\overline{\text{INT1}}$ input is active low. 1: $\overline{\text{INT1}}$ input is active high.
6:4	IN1SL[2:0]	**$\overline{\text{INT1}}$ Port Pin Selection Bits.** These bits select which Port pin is assigned to $\overline{\text{INT1}}$. Note that this pin assignment is independent of the Crossbar; $\overline{\text{INT1}}$ will monitor the assigned Port pin without disturbing the peripheral that has been assigned the Port pin via the Crossbar. The Crossbar will not assign the Port pin to a peripheral if it is configured to skip the selected pin. 000: Select P0.0 001: Select P0.1 010: Select P0.2 011: Select P0.3 100: Select P0.4 101: Select P0.5 110: Select P0.6 111: Select P0.7
3	IN0PL	**$\overline{\text{INT0}}$ Polarity.** 0: $\overline{\text{INT0}}$ input is active low. 1: $\overline{\text{INT0}}$ input is active high.
2:0	IN0SL[2:0]	**$\overline{\text{INT0}}$ Port Pin Selection Bits.** These bits select which Port pin is assigned to $\overline{\text{INT0}}$. Note that this pin assignment is independent of the Crossbar; $\overline{\text{INT0}}$ will monitor the assigned Port pin without disturbing the peripheral that has been assigned the Port pin via the Crossbar. The Crossbar will not assign the Port pin to a peripheral if it is configured to skip the selected pin. 000: Select P0.0 001: Select P0.1 010: Select P0.2 011: Select P0.3 100: Select P0.4 101: Select P0.5 110: Select P0.6 111: Select P0.7

17. Reset Sources

Reset circuitry allows the controller to be easily placed in a predefined default condition. On entry to this reset state, the following occur:

- CIP-51 halts program execution
- Special Function Registers (SFRs) are initialized to their defined reset values
- External Port pins are forced to a known state
- Interrupts and timers are disabled.

All SFRs are reset to the predefined values noted in the SFR detailed descriptions. The contents of internal data memory are unaffected during a reset; any previously stored data is preserved. However, since the stack pointer SFR is reset, the stack is effectively lost, even though the data on the stack is not altered.

The Port I/O latches are reset to 0xFF (all logic ones) in open-drain mode. Weak pullups are enabled during and after the reset. For V_{DD} Monitor and power-on resets, the $\overline{RST}$ pin is driven low until the device exits the reset state.

On exit from the reset state, the program counter (PC) is reset, and the system clock defaults to the internal oscillator. The Watchdog Timer is enabled with the system clock divided by 12 as its clock source. Program execution begins at location 0x0000.

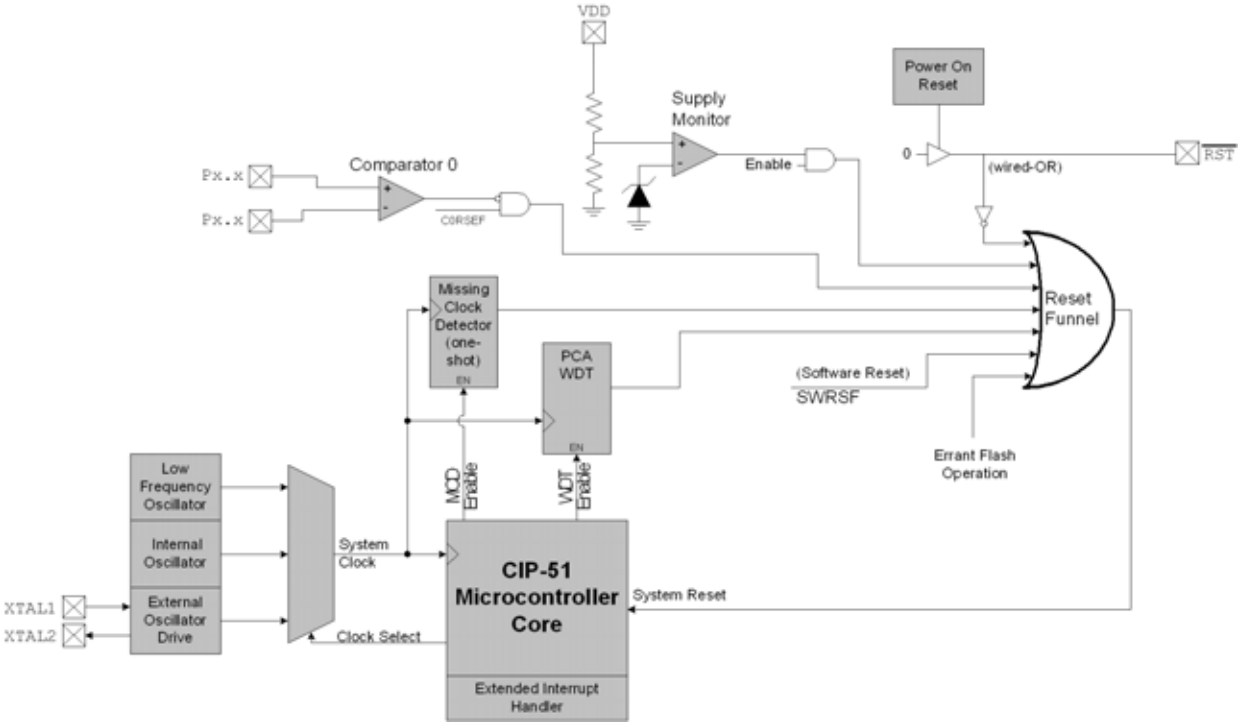

Figure 17.1. Reset Sources

17.1. Power-On Reset

During power-up, the device is held in a reset state and the $\overline{RST}$ pin is driven low until V_{DD} settles above V_{RST}. A delay occurs before the device is released from reset; the delay decreases as the V_{DD} ramp time increases (V_{DD} ramp time is defined as how fast V_{DD} ramps from 0 V to V_{RST}). Figure 17.2. plots the power-on and V_{DD} monitor event timing. The maximum V_{DD} ramp time is 1 ms; slower ramp times may cause the device to be released from reset before V_{DD} reaches the V_{RST} level. For ramp times less than 1 ms, the power-on reset delay ($T_{PORDelay}$) is typically less than 0.3 ms.

On exit from a power-on or V_{DD} monitor reset, the PORSF flag (RSTSRC.1) is set by hardware to logic 1. When PORSF is set, all of the other reset flags in the RSTSRC Register are indeterminate (PORSF is cleared by all other resets). Since all resets cause program execution to begin at the same location (0x0000) software can read the PORSF flag to determine if a power-up was the cause of reset. The content of internal data memory should be assumed to be undefined after a power-on reset. The V_{DD} monitor is enabled following a power-on reset.

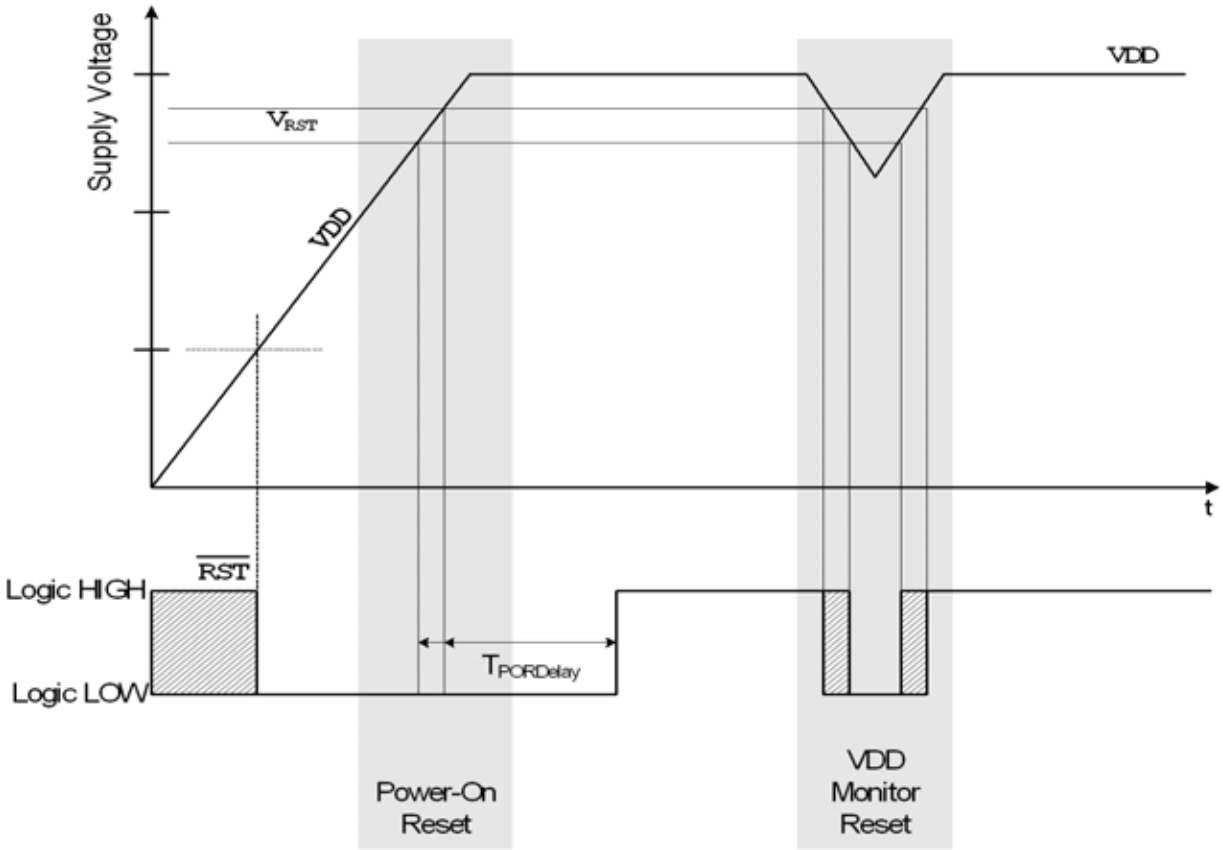

Figure 17.2. Power-On and V_{DD} Monitor Reset Timing

17.2. Power-Fail Reset / V_{DD} Monitor

When a powerdown transition or power irregularity causes V_{DD} to drop below V_{RST}, the power supply monitor will drive the $\overline{RST}$ pin low and hold the CIP-51 in a reset state (see Figure 17.2). When V_{DD} returns to a level above V_{RST}, the CIP-51 will be released from the reset state. Note that even though internal data memory contents are not altered by the power-fail reset, it is impossible to determine if V_{DD} dropped below the level required for data retention. If the PORSF flag reads 1, the data may no longer be valid. The V_{DD} monitor is enabled after power-on resets. Its defined state (enabled/disabled) is not altered by any other reset source. For example, if the V_{DD} monitor is disabled by code and a software reset is performed, the V_{DD} monitor will still be disabled after the reset.

I**mportant Note:** If the V_{DD} monitor is being turned on from a disabled state, it should be enabled before it is selected as a reset source. Selecting the V_{DD} monitor as a reset source before it is enabled and stabilized may cause a system reset. In some applications, this reset may be undesirable. If this is not desirable in the application, a delay should be introduced between enabling the monitor and selecting it as a reset source. The procedure for enabling the V_{DD} monitor and configuring it as a reset source from a disabled state is shown below:

1. Enable the V_{DD} monitor (VDMEN bit in VDM0CN = 1).
2. If necessary, wait for the V_{DD} monitor to stabilize (see Table 5.4 for the V_{DD} Monitor turn-on time).
3. Select the V_{DD} monitor as a reset source (PORSF bit in RSTSRC = 1).

See Figure 17.2 for V_{DD} monitor timing; note that the power-on-reset delay is not incurred after a V_{DD} monitor reset. See Table 5.4 for complete electrical characteristics of the V_{DD} monitor.

SFR Definition 17.1. VDM0CN: V_{DD} Monitor Control

Bit	7	6	5	4	3	2	1	0
Name	VDMEN	VDDSTAT						
Type	R/W	R	R	R	R	R	R	R
Reset	Varies	Varies	Varies	Varies	Varies	Varies	Varies	Varies

SFR Address = 0xFF; SFR Page = All Pages

Bit	Name	Function
7	VDMEN	**V_{DD} Monitor Enable.** This bit turns the V_{DD} monitor circuit on/off. The V_{DD} Monitor cannot generate system resets until it is also selected as a reset source in register RSTSRC (SFR Definition 17.2). Selecting the V_{DD} monitor as a reset source before it has stabilized may generate a system reset. In systems where this reset would be undesirable, a delay should be introduced between enabling the V_{DD} Monitor and selecting it as a reset source. See Table 5.4 for the minimum V_{DD} Monitor turn-on time. 0: V_{DD} Monitor Disabled. 1: V_{DD} Monitor Enabled.
6	VDDSTAT	**V_{DD} Status.** This bit indicates the current power supply status (V_{DD} Monitor output). 0: V_{DD} is at or below the V_{DD} monitor threshold. 1: V_{DD} is above the V_{DD} monitor threshold.
5:0	Unused	Read = 000000b; Write = Don't care.

17.3. External Reset

The external $\overline{RST}$ pin provides a means for external circuitry to force the device into a reset state. Asserting an active-low signal on the $\overline{RST}$ pin generates a reset; an external pullup and/or decoupling of the $\overline{RST}$ pin may be necessary to avoid erroneous noise-induced resets. See Table 5.4 for complete $\overline{RST}$ pin specifications. The PINRSF flag (RSTSRC.0) is set on exit from an external reset.

17.4. Missing Clock Detector Reset

The Missing Clock Detector (MCD) is a one-shot circuit that is triggered by the system clock. If the system clock remains high or low for more than the MCD time-out, a reset will be generated. After a MCD reset, the MCDRSF flag (RSTSRC.2) will read 1, signifying the MCD as the reset source; otherwise, this bit reads 0. Writing a 1 to the MCDRSF bit enables the Missing Clock Detector; writing a 0 disables it. The state of the $\overline{RST}$ pin is unaffected by this reset.

17.5. Comparator0 Reset

Comparator0 can be configured as a reset source by writing a 1 to the C0RSEF flag (RSTSRC.5). Comparator0 should be enabled and allowed to settle prior to writing to C0RSEF to prevent any turn-on chatter on the output from generating an unwanted reset. The Comparator0 reset is active-low: if the non-inverting input voltage (on CP0+) is less than the inverting input voltage (on CP0-), the device is put into the reset state. After a Comparator0 reset, the C0RSEF flag (RSTSRC.5) will read 1 signifying Comparator0 as the reset source; otherwise, this bit reads 0. The state of the $\overline{RST}$ pin is unaffected by this reset.

17.6. PCA Watchdog Timer Reset

The programmable Watchdog Timer (WDT) function of the Programmable Counter Array (PCA) can be used to prevent software from running out of control during a system malfunction. The PCA WDT function can be enabled or disabled by software as described in Section “26.4. Watchdog Timer Mode” on page 269; the WDT is enabled and clocked by SYSCLK / 12 following any reset. If a system malfunction prevents user software from updating the WDT, a reset is generated and the WDTRSF bit (RSTSRC.5) is set to 1. The state of the $\overline{RST}$ pin is unaffected by this reset.

17.7. Flash Error Reset

If a Flash program read, write, or erase operation targets an illegal address, a system reset is generated. This may occur due to any of the following:

- Programming hardware attempts to write or erase a Flash location which is above the user code space address limit.
- A Flash read from firmware is attempted above user code space. This occurs when a MOVC operation is attempted above the user code space address limit.
- A Program read is attempted above user code space. This occurs when user code attempts to branch to an address above the user code space address limit.
- A Flash read, write, or erase attempt is restricted due to a Flash security setting.
- A Flash write or erase is attempted when the V_{DD} monitor is not enabled.

The FERROR bit (RSTSRC.6) is set following a Flash error reset. The state of the $\overline{RST}$ pin is unaffected by this reset.

17.8. Software Reset

Software may force a reset by writing a 1 to the SWRSF bit (RSTSRC.4). The SWRSF bit will read 1 following a software forced reset. The state of the $\overline{RST}$ pin is unaffected by this reset.

SFR Definition 17.2. RSTSRC: Reset Source

Bit	7	6	5	4	3	2	1	0
Name	Reserved	FERROR	C0RSEF	SWRSF	WDTRSF	MCDRSF	PORSF	PINRSF
Type	R/W	R	R/W	R/W	R	R/W	R/W	R
Reset	Varies	Varies	Varies	Varies	Varies	Varies	Varies	Varies

SFR Address = 0xEF; SFR Page = All Pages

Bit	Name	Description	Write	Read
7	Reserved		Must Write 0b.	Read = 0b
6	FERROR	**Flash Error Reset Flag.**	N/A	Set to 1 if Flash read/write/erase error caused the last reset.
5	C0RSEF	**Comparator0 Reset Enable and Flag.**	Writing a 1 enables Comparator0 as a reset source (active-low).	Set to 1 if Comparator0 caused the last reset.
4	SWRSF	**Software Reset Force and Flag.**	Writing a 1 forces a system reset.	Set to 1 if last reset was caused by a write to SWRSF.
3	WDTRSF	**Watchdog Timer Reset Flag.**	N/A	Set to 1 if Watchdog Timer overflow caused the last reset.
2	MCDRSF	**Missing Clock Detector Enable and Flag.**	Writing a 1 enables the Missing Clock Detector. The MCD triggers a reset if a missing clock condition is detected.	Set to 1 if Missing Clock Detector timeout caused the last reset.
1	PORSF	**Power-On / V_{DD} Monitor Reset Flag, and V_{DD} monitor Reset Enable.**	Writing a 1 enables the V_{DD} monitor as a reset source. **Writing 1 to this bit before the V_{DD} monitor is enabled and stabilized may cause a system reset.**	Set to 1 anytime a power-on or V_{DD} monitor reset occurs. **When set to 1 all other RSTSRC flags are indeterminate.**
0	PINRSF	**HW Pin Reset Flag.**	N/A	Set to 1 if $\overline{RST}$ pin caused the last reset.

Note: Do not use read-modify-write operations on this register

18. Flash Memory

On-chip, re-programmable Flash memory is included for program code and non-volatile data storage. The Flash memory can be programmed in-system through the C2 interface or by software using the MOVX instruction. Once cleared to logic 0, a Flash bit must be erased to set it back to logic 1. Flash bytes would typically be erased (set to 0xFF) before being reprogrammed. The write and erase operations are automatically timed by hardware for proper execution; data polling to determine the end of the write/erase operation is not required. Code execution is stalled during a Flash write/erase operation.

18.1. Programming The Flash Memory

The simplest means of programming the Flash memory is through the C2 interface using programming tools provided by Silicon Labs or a third party vendor. This is the only means for programming a non-initialized device. For details on the C2 commands to program Flash memory, see Section “27. C2 Interface” on page 277.

To ensure the integrity of Flash contents, it is strongly recommended that the V_{DD} monitor be left enabled in any system which writes or erases Flash memory from code. It is also crucial to ensure that the FLRT bit in register FLSCL be set to '1' if a clock speed higher than 25 MHz is being used for the device.

18.1.1. Flash Lock and Key Functions

Flash writes and erases by user software are protected with a lock and key function. The Flash Lock and Key Register (FLKEY) must be written with the correct key codes, in sequence, before Flash operations may be performed. The key codes are: 0xA5, 0xF1. The timing does not matter, but the codes must be written in order. If the key codes are written out of order, or the wrong codes are written, Flash writes and erases will be disabled until the next system reset. Flash writes and erases will also be disabled if a Flash write or erase is attempted before the key codes have been written properly. The Flash lock resets after each write or erase; the key codes must be written again before a following Flash operation can be performed. The FLKEY register is detailed in SFR Definition 18.2.

18.1.2. Flash Erase Procedure

The Flash memory can be programmed by software using the MOVX write instruction with the address and data byte to be programmed provided as normal operands. Before writing to Flash memory using MOVX, Flash write operations must be enabled by: (1) Writing the Flash key codes in sequence to the Flash Lock register (FLKEY); and (2) Setting the PSWE Program Store Write Enable bit (PSCTL.0) to logic 1 (this directs the MOVX writes to target Flash memory). The PSWE bit remains set until cleared by software.

A write to Flash memory can clear bits to logic 0 but cannot set them; only an erase operation can set bits to logic 1 in Flash. **A byte location to be programmed must be erased before a new value is written.** The Flash memory is organized in 512-byte pages. The erase operation applies to an entire page (setting all bytes in the page to 0xFF). To erase an entire 512-byte page, perform the following steps:

1. Disable interrupts (recommended).
2. Write the first key code to FLKEY: 0xA5.
3. Write the second key code to FLKEY: 0xF1.
4. Set the PSEE bit (register PSCTL).
5. Set the PSWE bit (register PSCTL).
6. Using the MOVX instruction, write a data byte to any location within the 512-byte page to be erased.
7. Clear the PSWE bit (register PSCTL).
8. Clear the PSEE bit (register PSCTI).

18.1.3. Flash Write Procedure

Bytes in Flash memory can be written one byte at a time, or in groups of two. The FLBWE bit in register PFE0CN (SFR Definition) controls whether a single byte or a block of two bytes is written to Flash during a write operation. When FLBWE is cleared to 0, the Flash will be written one byte at a time. When FLBWE is set to 1, the Flash will be written in two-byte blocks. Block writes are performed in the same amount of time as single-byte writes, which can save time when storing large amounts of data to Flash memory.During a single-byte write to Flash, bytes are written individually, and a Flash write will be performed after each MOVX write instruction. The recommended procedure for writing Flash in single bytes is:

1. Disable interrupts.
2. Clear the FLBWE bit (register PFE0CN) to select single-byte write mode.
3. Set the PSWE bit (register PSCTL).
4. Clear the PSEE bit (register PSCTL).
5. Write the first key code to FLKEY: 0xA5.
6. Write the second key code to FLKEY: 0xF1.
7. Using the MOVX instruction, write a single data byte to the desired location within the 512-byte sector.
8. Clear the PSWE bit.
9. Re-enable interrupts.

Steps 5-7 must be repeated for each byte to be written.

For block Flash writes, the Flash write procedure is only performed after the last byte of each block is written with the MOVX write instruction. A Flash write block is two bytes long, from even addresses to odd addresses. Writes must be performed sequentially (i.e. addresses ending in 0b and 1b must be written in order). The Flash write will be performed following the MOVX write that targets the address ending in 1b. If a byte in the block does not need to be updated in Flash, it should be written to 0xFF. The recommended procedure for writing Flash in blocks is:

1. Disable interrupts.
2. Set the FLBWE bit (register PFE0CN) to select block write mode.
3. Set the PSWE bit (register PSCTL).
4. Clear the PSEE bit (register PSCTL).
5. Write the first key code to FLKEY: 0xA5.
6. Write the second key code to FLKEY: 0xF1.
7. Using the MOVX instruction, write the first data byte to the even block location (ending in 0b).
8. Write the first key code to FLKEY: 0xA5.
9. Write the second key code to FLKEY: 0xF1.
10. Using the MOVX instruction, write the second data byte to the odd block location (ending in 1b).
11. Clear the PSWE bit.
12. Re-enable interrupts.

Steps 5–10 must be repeated for each block to be written.

18.2. Non-Volatile Data Storage

The Flash memory can be used for non-volatile data storage as well as program code. This allows data such as calibration coefficients to be calculated and stored at run time. Data is written using the MOVX write instruction and read using the MOVC instruction. Note: MOVX read instructions always target XRAM.

18.3. Security Options

The CIP-51 provides security options to protect the Flash memory from inadvertent modification by software as well as to prevent the viewing of proprietary program code and constants. The Program Store Write Enable (bit PSWE in register PSCTL) and the Program Store Erase Enable (bit PSEE in register PSCTL) bits protect the Flash memory from accidental modification by software. PSWE must be explicitly set to 1 before software can modify the Flash memory; both PSWE and PSEE must be set to 1 before software can erase Flash memory. Additional security features prevent proprietary program code and data constants from being read or altered across the C2 interface.

A Security Lock Byte located at the last byte of Flash user space offers protection of the Flash program memory from access (reads, writes, or erases) by unprotected code or the C2 interface. The Flash security mechanism allows the user to lock *n* 512-byte Flash pages, starting at page 0 (addresses 0x0000 to 0x01FF), where *n* is the 1s complement number represented by the Security Lock Byte. Note that the page containing the Flash Security Lock Byte is also locked when any other Flash pages are locked. See example below.

Security Lock Byte:	11111101b
1s Complement:	00000010b
Flash pages locked:	3 (2 + Flash Lock Byte Page)
Addresses locked:	First two pages of Flash: 0x0000 to 0x03FF Flash Lock Byte Page: (0xFA00 to 0xFBFF for 64k devices; 0x7E00 to 0x7FFF for 32k devices)

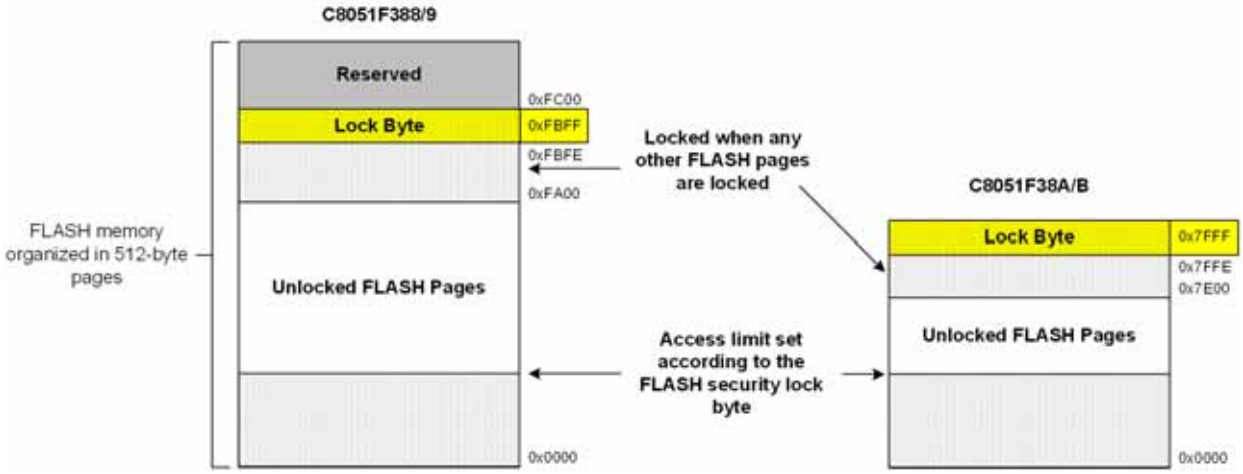

Figure 18.1. Flash Program Memory Map and Security Byte

The level of FLASH security depends on the FLASH access method. The three FLASH access methods that can be restricted are reads, writes, and erases from the C2 debug interface, user firmware executing on unlocked pages, and user firmware executing on locked pages.

Accessing FLASH **from the C2 debug interface**:

1. Any unlocked page may be read, written, or erased.
2. Locked pages cannot be read, written, or erased.
3. The page containing the Lock Byte may be read, written, or erased if it is unlocked.
4. Reading the contents of the Lock Byte with no pages locked is always permitted.
5. Reading the contents of the Lock Byte with any pages locked is not permitted.
6. Locking additional pages (changing 1s to 0s in the Lock Byte) is not permitted.
7. Unlocking FLASH pages (changing 0s to 1s in the Lock Byte) requires the C2 Device Erase command, which erases all FLASH pages including the page containing the Lock Byte and the Lock Byte itself.
8. The Reserved Area cannot be read, written, or erased.

Accessing FLASH **from user firmware** executing on an **unlocked page**:

1. Any unlocked page except the page containing the Lock Byte may be read, written, or erased.
2. Locked pages cannot be read, written, or erased.
3. The page containing the Lock Byte cannot be erased. It may be read or written only if it is unlocked.
4. Reading the contents of the Lock Byte with no pages locked is always permitted.
5. Reading the contents of the Lock Byte with any pages locked is not permitted.
6. Locking additional pages (changing 1s to 0s in the Lock Byte) is not permitted.
7. Unlocking FLASH pages (changing 0s to 1s in the Lock Byte) is not permitted.
8. The Reserved Area cannot be read, written, or erased. Any attempt to access the reserved area, or any other locked page, will result in a FLASH Error device reset.

Accessing FLASH **from user firmware** executing on a **locked page**:

1. Any unlocked page except the page containing the Lock Byte may be read, written, or erased.
2. Any locked page except the page containing the Lock Byte may be read, written, or erased.
3. The page containing the Lock Byte cannot be erased. It may only be read or written.
4. Reading the contents of the Lock Byte is always permitted.
5. Locking additional pages (changing 1s to 0s in the Lock Byte) is not permitted.
6. Unlocking FLASH pages (changing 0s to 1s in the Lock Byte) is not permitted.
7. The Reserved Area cannot be read, written, or erased. Any attempt to access the reserved area, or any other locked page, will result in a FLASH Error device reset.

SFR Definition 18.1. PSCTL: Program Store R/W Control

Bit	7	6	5	4	3	2	1	0
Name							PSEE	PSWE
Type	R	R	R	R	R	R	R/W	R/W
Reset	0	0	0	0	0	0	0	0

SFR Address =0x8F; SFR Page = All Pages

Bit	Name	Function
7:2	Reserved	Must write 000000b.
1	PSEE	**Program Store Erase Enable.** Setting this bit (in combination with PSWE) allows an entire page of Flash program memory to be erased. If this bit is logic 1 and Flash writes are enabled (PSWE is logic 1), a write to Flash memory using the MOVX instruction will erase the entire page that contains the location addressed by the MOVX instruction. The value of the data byte written does not matter. 0: Flash program memory erasure disabled. 1: Flash program memory erasure enabled.
0	PSWE	**Program Store Write Enable.** Setting this bit allows writing a byte of data to the Flash program memory using the MOVX write instruction. The Flash location should be erased before writing data. 0: Writes to Flash program memory disabled. 1: Writes to Flash program memory enabled; the MOVX write instruction targets Flash memory.

SFR Definition 18.2. FLKEY: Flash Lock and Key

Bit	7	6	5	4	3	2	1	0
Name	FLKEY[7:0]							
Type	R/W							
Reset	0	0	0	0	0	0	0	0

SFR Address = 0xB7; SFR Page = All Pages

Bit	Name	Function
7:0	FLKEY[7:0]	**Flash Lock and Key Register.** Write: This register provides a lock and key function for Flash erasures and writes. Flash writes and erases are enabled by writing 0xA5 followed by 0xF1 to the FLKEY register. Flash writes and erases are automatically disabled after the next write or erase is complete. If any writes to FLKEY are performed incorrectly, or if a Flash write or erase operation is attempted while these operations are disabled, the Flash will be permanently locked from writes or erasures until the next device reset. If an application never writes to Flash, it can intentionally lock the Flash by writing a non-0xA5 value to FLKEY from software. Read: When read, bits 1–0 indicate the current Flash lock state. 00: Flash is write/erase locked. 01: The first key code has been written (0xA5). 10: Flash is unlocked (writes/erases allowed). 11: Flash writes/erases disabled until the next reset.

SFR Definition 18.3. FLSCL: Flash Scale

Bit	7	6	5	4	3	2	1	0
Name	FOSE	Reserved		FLRT	Reserved			
Type	R/W	R/W		R/W	R/W			
Reset	1	0	0	0	0	0	0	0

SFR Address = 0xB6; SFR Page = All Pages

Bit	Name	Function
7	FOSE	**Flash One-shot Enable.** This bit enables the Flash read one-shot. When the Flash one-shot disabled, the Flash sense amps are enabled for a full clock cycle during Flash reads. At system clock frequencies below 10 MHz, disabling the Flash one-shot will increase system power consumption. 0: Flash one-shot disabled. 1: Flash one-shot enabled.
6:5	Reserved	Must write 00b.
4	FLRT	**FLASH Read Time.** This bit should be programmed to the smallest allowed value, according to the system clock speed. 0: SYSCLK <= 25 MHz. 1: SYSCLK <= 48 MHz.
3:0	Reserved	Must write 0000b.

19. Oscillators and Clock Selection

C8051F388/9/A/B devices include a programmable internal high-frequency oscillator, a programmable internal low-frequency oscillator, and an external oscillator drive circuit. The internal high-frequency oscillator can be enabled/disabled and calibrated using the OSCICN and OSCICL registers, as shown in Figure 19.1. The internal low-frequency oscillator can be enabled/disabled and calibrated using the OSCLCN register. The system clock can be sourced by the external oscillator circuit or either internal oscillator. Both internal oscillators offer a selectable post-scaling feature.

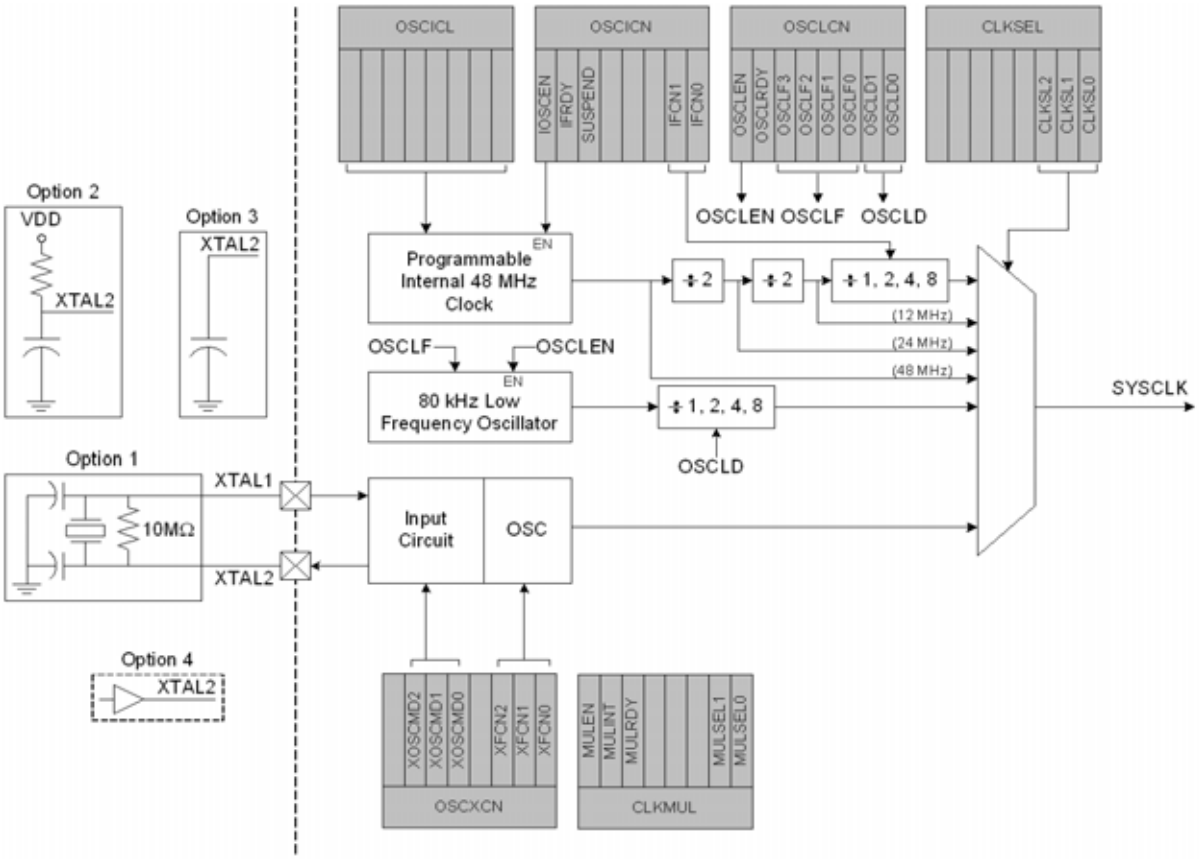

Figure 19.1. Oscillator Options

19.1. System Clock Selection

The CLKSL[2:0] bits in register CLKSEL select which oscillator source is used as the system clock. CLKSL[2:0] must be set to 001b for the system clock to run from the external oscillator; however the external oscillator may still clock certain peripherals (timers, PCA) when the internal oscillator is selected as the system clock. The system clock may be switched on-the-fly between the internal oscillators and external oscillator so long as the selected clock source is enabled and running.

The internal high-frequency and low-frequency oscillators require little start-up time and may be selected as the system clock immediately following the register write which enables the oscillator. The external RC and C modes also typically require no startup time.

SFR Definition 19.1. CLKSEL: Clock Select

Bit	7	6	5	4	3	2	1	0
Name		Reserved			OUTCLK	CLKSL[2:0]		
Type	R	R/W			R/W	R/W		
Reset	0	0	0	0	0	0	0	0

SFR Address = 0xA9; SFR Page = All Pages

Bit	Name	Function
7	Unused	Read = 0b; Write = don't care
6:4	Reserved	Read = 0b; Must Write 000b.
3	OUTCLK	**Crossbar Clock Out Select.** If the $\overline{\text{SYSCLK}}$ signal is enabled on the Crossbar, this bit selects between outputting SYSCLK and SYSCLK synchronized with the Port I/O pins. 0: Enabling the Crossbar $\overline{\text{SYSCLK}}$ signal outputs SYSCLK. 1: Enabling the Crossbar $\overline{\text{SYSCLK}}$ signal outputs SYSCLK synchronized with the Port I/O.
2:0	CLKSL[2:0]	**System Clock Source Select Bits.** 000: SYSCLK derived from the Internal High-Frequency Oscillator / 4 and scaled per the IFCN bits in register OSCICN. 001: SYSCLK derived from the External Oscillator circuit. 010: SYSCLK derived from the Internal High-Frequency Oscillator / 2. 011: SYSCLK derived from the Internal High-Frequency Oscillator. 100: SYSCLK derived from the Internal Low-Frequency Oscillator and scaled per the OSCLD bits in register OSCLCN. 101-111: Reserved.

19.2. Programmable Internal High-Frequency (H-F) Oscillator

All C8051F388/9/A/B devices include a programmable internal high-frequency oscillator that defaults as the system clock after a system reset. The internal oscillator period can be adjusted via the OSCICL register as defined by SFR Definition 19.2.

On C8051F388/9/A/B devices, OSCICL is factory calibrated to obtain a 48 MHz base frequency. Note that the system clock may be derived from the programmed internal oscillator divided by 1, 2, 4, or 8 after a divide by 4 stage, as defined by the IFCN bits in register OSCICN. The divide value defaults to 8 following a reset, which results in a 1.5 MHz system clock.

19.2.1. Internal Oscillator Suspend Mode

When software writes a logic 1 to SUSPEND (OSCICN.5), the internal oscillator is suspended. If the system clock is derived from the internal oscillator, the input clock to the peripheral or CIP-51 will be stopped until a rising or falling edge occurs on the INT2 pin.

When one of the oscillator awakening events occur, the internal oscillator, CIP-51, and affected peripherals resume normal operation. The CPU resumes execution at the instruction following the write to the SUSPEND bit.

Note: The prefetch engine can be turned off in suspend mode to save power. Additionally, both Voltage Regulators (REG0 and REG1) have low-power modes for additional power savings in suspend mode.

SFR Definition 19.2. OSCICL: Internal H-F Oscillator Calibration

Bit	7	6	5	4	3	2	1	0
Name		OSCICL[6:0]						
Type	R	R/W						
Reset	0	Varies	Varies	Varies	Varies	Varies	Varies	Varies

SFR Address = 0xB3; SFR Page = All Pages

Bit	Name	Function
7	Unused	Read = 0; Write = don't care
6:0	OSCICL[6:0]	**Internal Oscillator Calibration Bits.** These bits determine the internal oscillator period. When set to 0000000b, the H-F oscillator operates at its fastest setting. When set to 1111111b, the H-F oscillator operates at its slowest setting. The reset value is factory calibrated to generate an internal oscillator frequency of 48 MHz. OSCICL should only be changed by firmware when the H-F oscillator is disabled (IOSCEN = 0).

SFR Definition 19.3. OSCICN: Internal H-F Oscillator Control

Bit	7	6	5	4	3	2	1	0
Name	IOSCEN	IFRDY	SUSPEND				IFCN[1:0]	
Type	R/W	R	R/W	R	R	R	R/W	
Reset	1	1	0	0	0	0	0	0

SFR Address = 0xB2; SFR Page = All Pages

Bit	Name	Function
7	IOSCEN	**Internal H-F Oscillator Enable Bit.** 0: Internal H-F Oscillator Disabled. 1: Internal H-F Oscillator Enabled.
6	IFRDY	**Internal H-F Oscillator Frequency Ready Flag.** 0: Internal H-F Oscillator is not running at programmed frequency. 1: Internal H-F Oscillator is running at programmed frequency.
5	SUSPEND	**Internal Oscillator Suspend Enable Bit.** Setting this bit to logic 1 places the internal oscillator in SUSPEND mode. The internal oscillator resumes operation when one of the SUSPEND mode awakening events occurs.
4:2	Unused	Read = 000b; Write = don't care
1:0	IFCN[1:0]	**Internal H-F Oscillator Frequency Divider Control Bits.** The Internal H-F Oscillator is divided by the IFCN bit setting after a divide-by-4 stage. 00: SYSCLK can be derived from Internal H-F Oscillator divided by 8 (1.5 MHz). 01: SYSCLK can be derived from Internal H-F Oscillator divided by 4 (3 MHz). 10: SYSCLK can be derived from Internal H-F Oscillator divided by 2 (6 MHz). 11: SYSCLK can be derived from Internal H-F Oscillator divided by 1 (12 MHz).

19.3. Clock Multiplier

The C8051F388/9/A/B device includes a 48 MHz high-frequency oscillator instead of a 12 MHz oscillator and a 4x Clock Multiplier. For compatibility with C8051F34x and C8051F32x devices however, the CLKMUL register (SFR Definition 19.4) behaves as if the Clock Multiplier is present and working.

SFR Definition 19.4. CLKMUL: Clock Multiplier Control

Bit	7	6	5	4	3	2	1	0
Name	MULEN	MULINIT	MULRDY				MULSEL[1:0]	
Type	R	R	R	R	R	R	R	
Reset	1	1	1	0	0	0	0	0

SFR Address = 0xB9; SFR Page = 0

Bit	Name	Description
7	MULEN	**Clock Multiplier Enable Bit.** This bit always reads 1.
6	MULINIT	**Clock Multiplier Initialize Bit.** This bit always reads 1.
5	MULRDY	**Clock Multiplier Ready Bit.** This bit always reads 1.
4:2	Unused	Read = 000b; Write = don't care
1:0	MULSEL[1:0]	**Clock Multiplier Input Select Bits.** These bits always read 00.

19.4. Programmable Internal Low-Frequency (L-F) Oscillator

All C8051F388/9/A/B devices include a programmable low-frequency internal oscillator, which is calibrated to a nominal frequency of 80 kHz. The low-frequency oscillator circuit includes a divider that can be changed to divide the clock by 1, 2, 4, or 8, using the OSCLD bits in the OSCLCN register (see SFR Definition 19.5). Additionally, the OSCLF[3:0] bits can be used to adjust the oscillator's output frequency.

19.4.1. Calibrating the Internal L-F Oscillator

Timers 2 and 3 include capture functions that can be used to capture the oscillator frequency, when running from a known time base. When either Timer 2 or Timer 3 is configured for L-F Oscillator Capture Mode, a falling edge (Timer 2) or rising edge (Timer 3) of the low-frequency oscillator's output will cause a capture event on the corresponding timer. As a capture event occurs, the current timer value (TMRnH:TMRnL) is copied into the timer reload registers (TMRnRLH:TMRnRLL). By recording the difference between two successive timer capture values, the low-frequency oscillator's period can be calculated. The OSCLF bits can then be adjusted to produce the desired oscillator frequency.

SFR Definition 19.5. OSCLCN: Internal L-F Oscillator Control

Bit	7	6	5	4	3	2	1	0
Name	OSCLEN	OSCLRDY	OSCLF[3:0]				OSCLD[1:0]	
Type	R/W	R	R.W				R/W	
Reset	0	0	Varies	Varies	Varies	Varies	0	0

SFR Address = 0x86; SFR Page = All Pages

Bit	Name	Function
7	OSCLEN	**Internal L-F Oscillator Enable.** 0: Internal L-F Oscillator Disabled. 1: Internal L-F Oscillator Enabled.
6	OSCLRDY	**Internal L-F Oscillator Ready.** 0: Internal L-F Oscillator frequency not stabilized. 1: Internal L-F Oscillator frequency stabilized. **Note:** OSCLRDY is only set back to 0 in the event of a device reset or a change to the OSCLD[1:0] bits.
5:2	OSCLF[3:0]	**Internal L-F Oscillator Frequency Control Bits.** Fine-tune control bits for the Internal L-F oscillator frequency. When set to 0000b, the L-F oscillator operates at its fastest setting. When set to 1111b, the L-F oscillator operates at its slowest setting. The OSCLF bits should only be changed by firmware when the L-F oscillator is disabled (OSCLEN = 0).
1:0	OSCLD[1:0]	**Internal L-F Oscillator Divider Select.** 00: Divide by 8 selected. 01: Divide by 4 selected. 10: Divide by 2 selected. 11: Divide by 1 selected.

19.5. External Oscillator Drive Circuit

The external oscillator circuit may drive an external crystal, ceramic resonator, capacitor, or RC network. A CMOS clock may also provide a clock input. Figure 19.1 shows a block diagram of the four external oscillator options. The external oscillator is enabled and configured using the OSCXCN register (see SFR Definition 19.6).

Important Note on External Oscillator Usage: Port pins must be configured when using the external oscillator circuit. When the external oscillator drive circuit is enabled in crystal/resonator mode, Port pins P0.2 and P0.3 are used as XTAL1 and XTAL2, respectively. When the external oscillator drive circuit is enabled in capacitor, RC, or CMOS clock mode, Port pin P0.3 is used as XTAL2. The Port I/O Crossbar should be configured to skip the Port pin used by the oscillator circuit; see Section “20.1. Priority Crossbar Decoder” on page 148 for Crossbar configuration. Additionally, when using the external oscillator circuit in crystal/resonator, capacitor, or RC mode, the associated Port pins should be configured as **analog inputs**. In CMOS clock mode, the associated pin should be configured as a **digital input**. See Section “20.2. Port I/O Initialization” on page 152 for details on Port input mode selection.

The external oscillator output may be selected as the system clock or used to clock some of the digital peripherals (e.g. Timers, PCA, etc.). See the data sheet chapters for each digital peripheral for details. See Section “5. Electrical Characteristics” on page 34 for complete oscillator specifications.

19.5.1. External Crystal Mode

If a crystal or ceramic resonator is used as the external oscillator, the crystal/resonator and a 10 MΩ resistor must be wired across the XTAL1 and XTAL2 pins as shown in Option 1 of Figure 19.1. Appropriate loading capacitors should be added to XTAL1 and XTAL2, and both pins should be configured for analog I/O with the digital output drivers disabled.

The capacitors shown in the external crystal configuration provide the load capacitance required by the crystal for correct oscillation. These capacitors are “in series” as seen by the crystal and “in parallel” with the stray capacitance of the XTAL1 and XTAL2 pins.

Note: The recommended load capacitance depends upon the crystal and the manufacturer. Refer to the crystal data sheet when completing these calculations.

The equation for determining the load capacitance for two capacitors is

$$C_L = \frac{C_A \times C_B}{C_A + C_B} + C_S$$

Where:
C_A and C_B are the capacitors connected to the crystal leads.
C_S is the total stray capacitance of the PCB.
The stray capacitance for a typical layout where the crystal is as close as possible to the pins is 2-5 pF per pin.

If C_A and C_B are the same (C), then the equation becomes

$$C_L = \frac{C}{2} + C_S$$

For example, a tuning-fork crystal of 32 kHz with a recommended load capacitance of 12.5 pF should use the configuration shown in Figure 19.1, Option 1. With a stray capacitance of 3 pF per pin (6 pF total), the 13 pF capacitors yield an equivalent capacitance of 12.5 pF across the crystal, as shown in Figure 19.2.

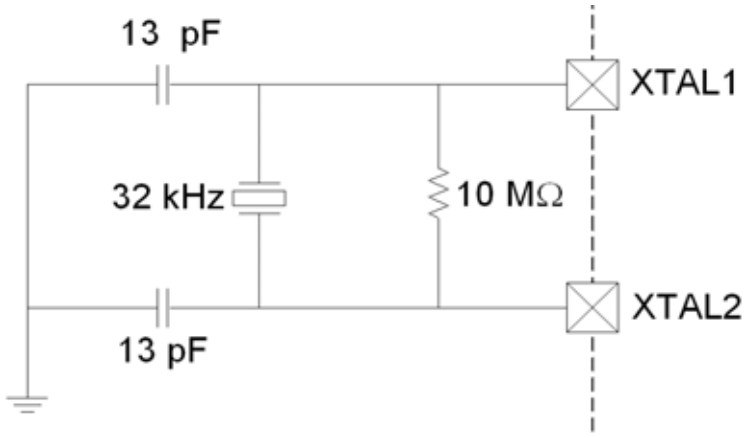

Figure 19.2. External Crystal Example

Important Note on External Crystals: Crystal oscillator circuits are quite sensitive to PCB layout. The crystal should be placed as close as possible to the XTAL pins on the device. The traces should be as short as possible and shielded with ground plane from any other traces which could introduce noise or interference.

When using an external crystal, the external oscillator drive circuit must be configured by software for *Crystal Oscillator Mode* or *Crystal Oscillator Mode with divide by 2 stage*. The divide by 2 stage ensures that the clock derived from the external oscillator has a duty cycle of 50%. The External Oscillator Frequency Control value (XFCN) must also be specified based on the crystal frequency (see SFR Definition 19.6).

When the crystal oscillator is first enabled, the external oscillator valid detector allows software to determine when the external system clock is valid and running. Switching to the external oscillator before the crystal oscillator has stabilized can result in unpredictable behavior. The recommended procedure for starting the crystal is:

1. Configure XTAL1 and XTAL2 for analog I/O.
2. Disable the XTAL1 and XTAL2 digital output drivers by writing 1s to the appropriate bits in the Port Latch register.
3. Configure and enable the external oscillator.
4. Wait at least 1 ms.
5. Poll for XTLVLD $\geq$ 1.
6. Switch the system clock to the external oscillator.

19.5.2. External RC Example

If an RC network is used as an external oscillator source for the MCU, the circuit should be configured as shown in Figure 19.1, “RC Mode”. The capacitor should be no greater than 100 pF; however, for very small capacitors, the total capacitance may be dominated by parasitic capacitance in the PCB layout. To determine the required External Oscillator Frequency Control value (XFCN) in the OSCXCN Register, first select the RC network value to produce the desired frequency of oscillation, according to Equation 19.1, where f = the frequency of oscillation in MHz, C = the capacitor value in pF, and R = the pull-up resistor value in kΩ.

$$f = 1.23 \times 10^3 \S (R \times C)$$

Equation 19.1. RC Mode Oscillator Frequency

For example: If the frequency desired is 100 kHz, let R = 246 kΩ and C = 50 pF:

f = 1.23(10^3) / RC = 1.23 (10^3) / [246 x 50] = 0.1 MHz = 100 kHz

Referring to the table in SFR Definition 19.6, the required XFCN setting is 010b.

19.5.3. External Capacitor Example

If a capacitor is used as an external oscillator for the MCU, the circuit should be configured as shown in Figure 19.1, “C Mode”. The capacitor should be no greater than 100 pF; however, for very small capacitors, the total capacitance may be dominated by parasitic capacitance in the PCB layout. To determine the required External Oscillator Frequency Control value (XFCN) in the OSCXCN Register, select the capacitor to be used and find the frequency of oscillation according to Equation 19.2, where f = the frequency of oscillation in MHz, C = the capacitor value in pF, and V_{DD} = the MCU power supply in Volts.

$$f = (KF)/(C \times V_{DD})$$

Equation 19.2. C Mode Oscillator Frequency

For example: Assume V_{DD} = 3.0 V and f = 150 kHz:

f = KF / (C x VDD)
0.150 MHz = KF / (C x 3.0)

Since the frequency of roughly 150 kHz is desired, select the K Factor from the table in SFR Definition 19.6 (OSCXCN) as KF = 22:

0.150 MHz = 22 / (C x 3.0)
C x 3.0 = 22 / 0.150 MHz
C = 146.6 / 3.0 pF = 48.8 pF

Therefore, the XFCN value to use in this example is 011b and C = 50 pF.

SFR Definition 19.6. OSCXCN: External Oscillator Control

Bit	7	6	5	4	3	2	1	0
Name	XCLKVLD	XOSCMD[2:0]				XFCN[2:0]		
Type	R	R/W			R	R/W		
Reset	0	0	0	0	0	0	0	0

SFR Address = 0xB1; SFR Page = All Pages

Bit	Name	Function
7	XCLKVLD	**External Oscillator Valid Flag.** Provides External Oscillator status and is valid at all times for all modes of operation except External CMOS Clock Mode and External CMOS Clock Mode with divide by 2. In these modes, XCLKVLD always returns 0. 0: External Oscillator is unused or not yet stable. 1: External Oscillator is running and stable.
6:4	XOSCMD[2:0]	**External Oscillator Mode Select.** 00x: External Oscillator circuit off. 010: External CMOS Clock Mode. 011: External CMOS Clock Mode with divide-by-2 stage. 100: RC Oscillator Mode with divide-by-2 stage. 101: Capacitor Oscillator Mode with divide-by-2 stage. 110: Crystal Oscillator Mode. 111: Crystal Oscillator Mode with divide-by-2 stage.
3	Unused	Read = 0; Write = don't care
2:0	XFCN[2:0]	**External Oscillator Frequency Control Bits.** Set according to the desired frequency for RC mode. Set according to the desired K Factor for C mode.

XFCN	Crystal Mode	RC Mode	C Mode
000	f ≤ 20 kHz	f ≤ 25 kHz	K Factor = 0.87
001	20 kHz < f ≤ 58 kHz	25 kHz < f ≤ 50 kHz	K Factor = 2.6
010	58 kHz < f ≤ 155 kHz	50 kHz < f ≤ 100 kHz	K Factor = 7.7
011	155 kHz < f ≤ 415 kHz	100 kHz < f ≤ 200 kHz	K Factor = 22
100	415 kHz < f ≤ 1.1 MHz	200 kHz < f ≤ 400 kHz	K Factor = 65
101	1.1 MHz < f ≤ 3.1 MHz	400 kHz < f ≤ 800 kHz	K Factor = 180
110	3.1 MHz < f ≤ 8.2 MHz	800 kHz < f ≤ 1.6 MHz	K Factor = 664
111	8.2 MHz < f ≤ 25 MHz	1.6 MHz < f ≤ 3.2 MHz	K Factor = 1590

20. Port Input/Output

Digital and analog resources are available through 40 I/O pins (C8051F388/A) or 25 I/O pins (C8051F389/B). Port pins are organized as shown in Figure 20.1. Each of the Port pins can be defined as general-purpose I/O (GPIO) or analog input; Port pins P0.0-P3.7 can be assigned to one of the internal digital resources as shown in Figure 20.3. The designer has complete control over which functions are assigned, limited only by the number of physical I/O pins. This resource assignment flexibility is achieved through the use of a Priority Crossbar Decoder. Note that the state of a Port I/O pin can always be read in the corresponding Port latch, regardless of the Crossbar settings.

The Crossbar assigns the selected internal digital resources to the I/O pins based on the Priority Decoder (Figure 20.3 and Figure 20.4). The registers XBR0, XBR1, and XBR2 defined in SFR Definition 20.1, SFR Definition 20.2, and SFR Definition 20.3, are used to select internal digital functions.

All Port I/Os are 5 V tolerant (refer to Figure 20.2 for the Port cell circuit). The Port I/O cells are configured as either push-pull or open-drain in the Port Output Mode registers (PnMDOUT, where n = 0,1,2,3,4).

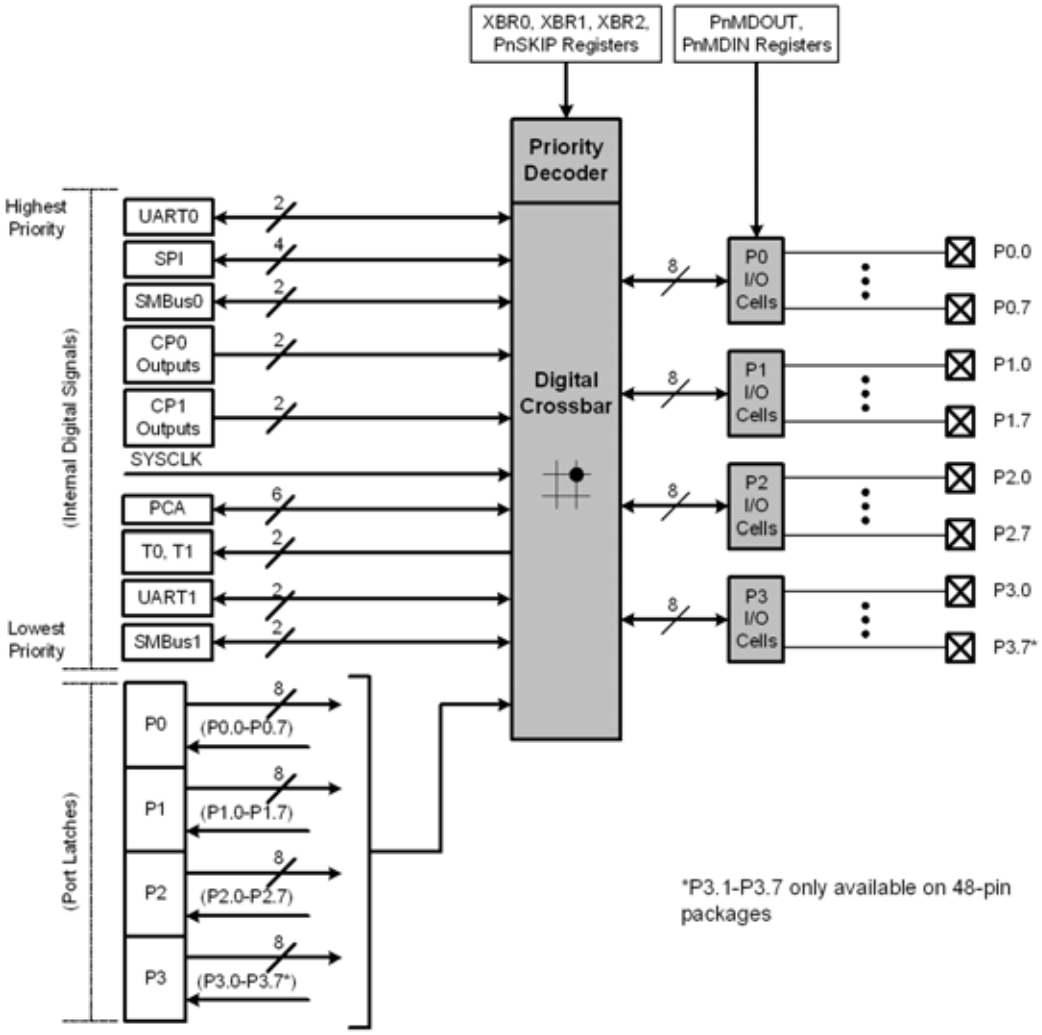

Figure 20.1. Port I/O Functional Block Diagram (Port 0 through Port 3)

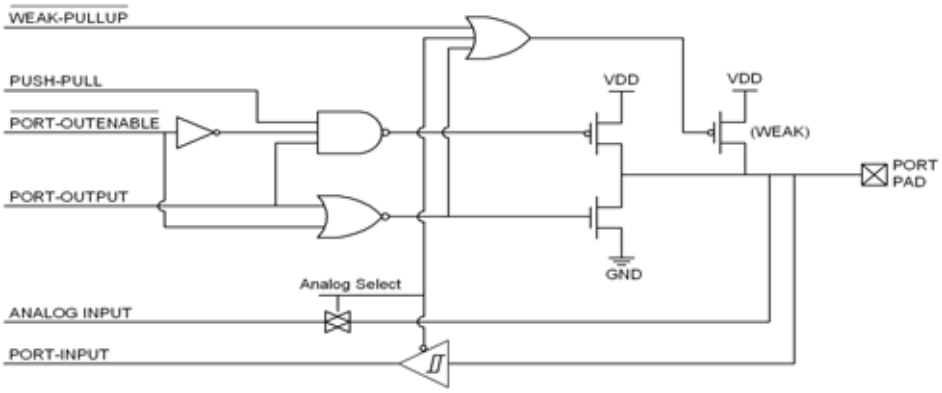

Figure 20.2. Port I/O Cell Block Diagram

20.1. Priority Crossbar Decoder

The Priority Crossbar Decoder (Figure 20.3) assigns a priority to each I/O function, starting at the top with UART0. When a digital resource is selected, the least-significant unassigned Port pin is assigned to that resource (excluding UART0, which is always at pins 4 and 5). If a Port pin is assigned, the Crossbar skips that pin when assigning the next selected resource. Additionally, the Crossbar will skip Port pins whose associated bits in the PnSKIP registers are set. The PnSKIP registers allow software to skip Port pins that are to be used for analog input, dedicated functions, or GPIO.

If a Port pin is claimed by a peripheral without use of the Crossbar, its corresponding PnSKIP bit should be set. This applies to the VREF signal, external oscillator pins (XTAL1, XTAL2), the ADC's external conversion start signal (CNVSTR), EMIF control signals, and any selected ADC or Comparator inputs. The PnSKIP registers may also be used to skip pins to be used as GPIO. The Crossbar skips selected pins as if they were already assigned, and moves to the next unassigned pin. Figure 20.3 shows all the possible pins available to each peripheral. Figure 20.4 shows an example Crossbar configuration with no Port pins skipped. Figure 20.5 shows the same Crossbar example with pins P0.2, P0.3, and P1.0 skipped.

Registers XBR0, XBR1, and XBR2 are used to assign the digital I/O resources to the physical I/O Port pins. Note that when either SMBus is selected, the Crossbar assigns both pins associated with the SMBus (SDA and SCL); when either UART is selected, the Crossbar assigns both pins associated with the UART (TX and RX). UART0 pin assignments are fixed for bootloading purposes: UART TX0 is always assigned to P0.4; UART RX0 is always assigned to P0.5. Standard Port I/Os appear contiguously after the prioritized functions have been assigned.

Important Note: The SPI can be operated in either 3-wire or 4-wire modes, depending on the state of the NSSMD1-NSSMD0 bits in register SPI0CN. According to the SPI mode, the NSS signal may or may not be routed to a Port pin.

Port	P0								P1								P2								P3							
Pin Number	0	1	2	3	4	5	6	7	0	1	2	3	4	5	6	7	0	1	2	3	4	5	6	7	0	1	2	3	4	5	6	7
SF Signals (32-pin Package)	XTAL1		XTAL2			CNVSTR		VREF																		P3.1-P3.7 Unavailable on 32-pin packages							
SF Signals (48-pin Package)						XTAL1		XTAL2	ALE		CNVSTR		VREF		/RD	/WR																
TX0					■																											
RX0						■																										
SCK	■	■	■	■	■	■	■	■	■	■	■	■	■	■	■	■	■	■	■	■	■	■	■	■	■	■	■	■	■			
MISO		■	■	■	■	■	■	■	■	■	■	■	■	■	■	■	■	■	■	■	■	■	■	■	■	■	■	■	■	■		
MOSI			■	■	■	■	■	■	■	■	■	■	■	■	■	■	■	■	■	■	■	■	■	■	■	■	■	■	■	■	■	
NSS*				■	■	■	■	■	■	■	■	■	■	■	■	■	■	■	■	■	■	■	■	■	■	■	■	■	■	■	■	■
SDA	■	■	■	■	■	■	■	■	■	■	■	■	■	■	■	■	■	■	■	■	■	■	■	■	■	■	■	■	■	■	■	
SCL		■	■	■	■	■	■	■	■	■	■	■	■	■	■	■	■	■	■	■	■	■	■	■	■	■	■	■	■	■	■	■
CP0	■	■	■	■	■	■	■	■	■	■	■	■	■	■	■	■	■	■	■	■	■	■	■	■	■	■	■	■	■	■	■	■
CP0A	■	■	■	■	■	■	■	■	■	■	■	■	■	■	■	■	■	■	■	■	■	■	■	■	■	■	■	■	■	■	■	■
CP1	■	■	■	■	■	■	■	■	■	■	■	■	■	■	■	■	■	■	■	■	■	■	■	■	■	■	■	■	■	■	■	■
CP1A	■	■	■	■	■	■	■	■	■	■	■	■	■	■	■	■	■	■	■	■	■	■	■	■	■	■	■	■	■	■	■	■
SYSCLK	■	■	■	■	■	■	■	■	■	■	■	■	■	■	■	■	■	■	■	■	■	■	■	■	■	■	■	■	■	■	■	■
CEX0	■	■	■	■	■	■	■	■	■	■	■	■	■	■	■	■	■	■	■	■	■	■	■	■	■	■	■	■	■	■	■	■
CEX1		■	■	■	■	■	■	■	■	■	■	■	■	■	■	■	■	■	■	■	■	■	■	■	■	■	■	■	■	■	■	■
CEX2			■	■	■	■	■	■	■	■	■	■	■	■	■	■	■	■	■	■	■	■	■	■	■	■	■	■	■	■	■	■
CEX3				■	■	■	■	■	■	■	■	■	■	■	■	■	■	■	■	■	■	■	■	■	■	■	■	■	■	■	■	■
CEX4					■	■	■	■	■	■	■	■	■	■	■	■	■	■	■	■	■	■	■	■	■	■	■	■	■	■	■	■
ECI	■	■	■	■	■	■	■	■	■	■	■	■	■	■	■	■	■	■	■	■	■	■	■	■	■	■	■	■	■	■	■	■
T0	■	■	■	■	■	■	■	■	■	■	■	■	■	■	■	■	■	■	■	■	■	■	■	■	■	■	■	■	■	■	■	■
T1	■	■	■	■	■	■	■	■	■	■	■	■	■	■	■	■	■	■	■	■	■	■	■	■	■	■	■	■	■	■	■	■
TX1	■	■	■	■	■	■	■	■	■	■	■	■	■	■	■	■	■	■	■	■	■	■	■	■	■	■	■	■	■	■	■	
RX1		■	■	■	■	■	■	■	■	■	■	■	■	■	■	■	■	■	■	■	■	■	■	■	■	■	■	■	■	■	■	■
SDA1	■	■	■	■	■	■	■	■	■	■	■	■	■	■	■	■	■	■	■	■	■	■	■	■	■	■	■	■	■	■	■	
SCL1		■	■	■	■	■	■	■	■	■	■	■	■	■	■	■	■	■	■	■	■	■	■	■	■	■	■	■	■	■	■	■
Pin Skip Settings	0	0	0	0	0	0	0	0	0	0	0	0	0	0	0	0	0	0	0	0	0	0	0	0	0	0	0	0	0	0	0	0
	P0SKIP								P1SKIP								P2SKIP								P3SKIP							

The crossbar peripherals are assigned in priority order from top to bottom, according to this diagram.

■ These boxes represent Port pins which can potentially be assigned to a peripheral.

□ Special Function Signals are not assigned by the crossbar. When these signals are enabled, the Crossbar should be manually configured to skip the corresponding port pins.

□ Pins can be "skipped" by setting the corresponding bit in PnSKIP to 1.

* NSS is only pinned out when the SPI is in 4-wire mode.

Figure 20.3. Peripheral Availability on Port I/O Pins

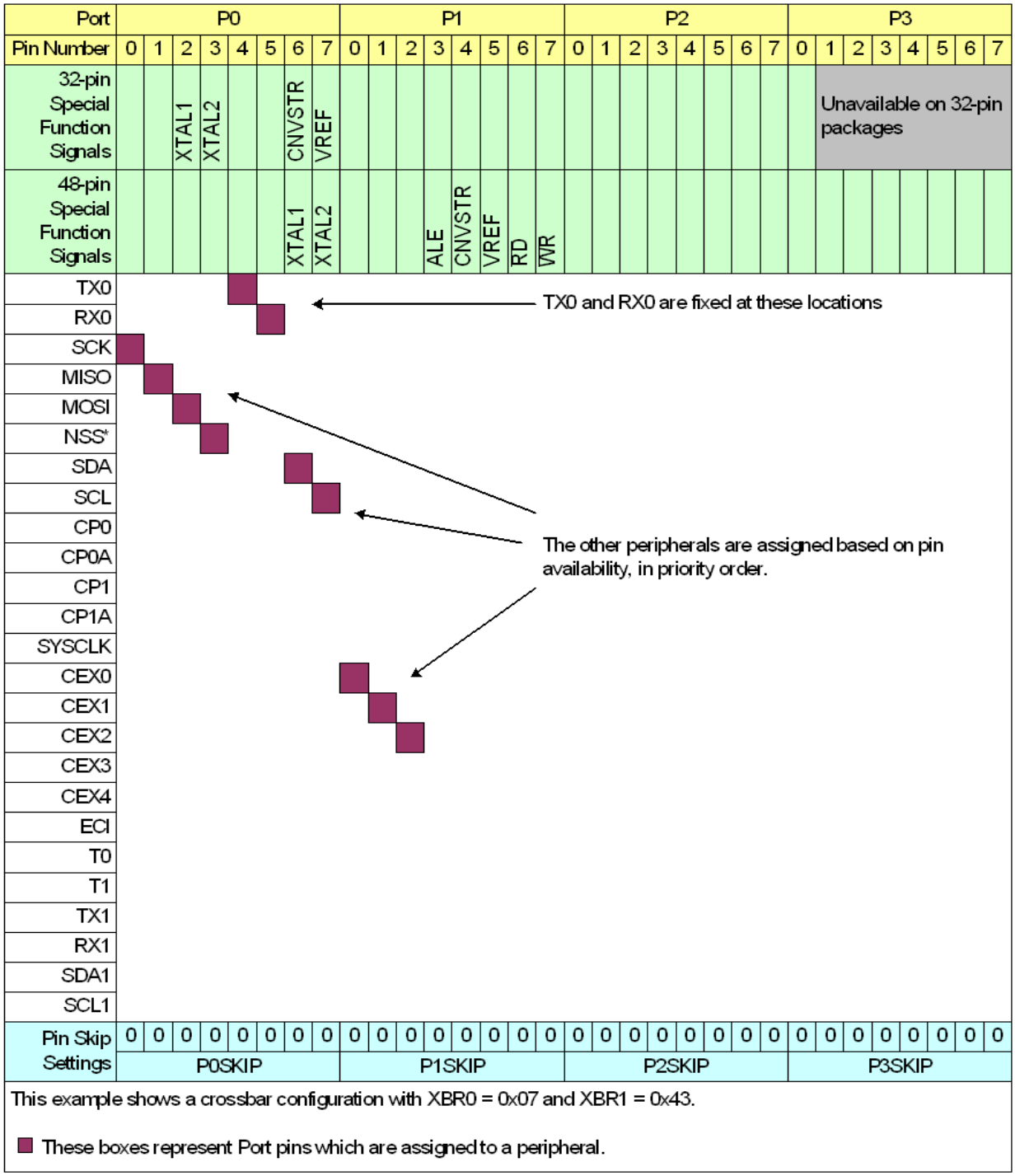

Figure 20.4. Crossbar Priority Decoder in Example Configuration (No Pins Skipped)

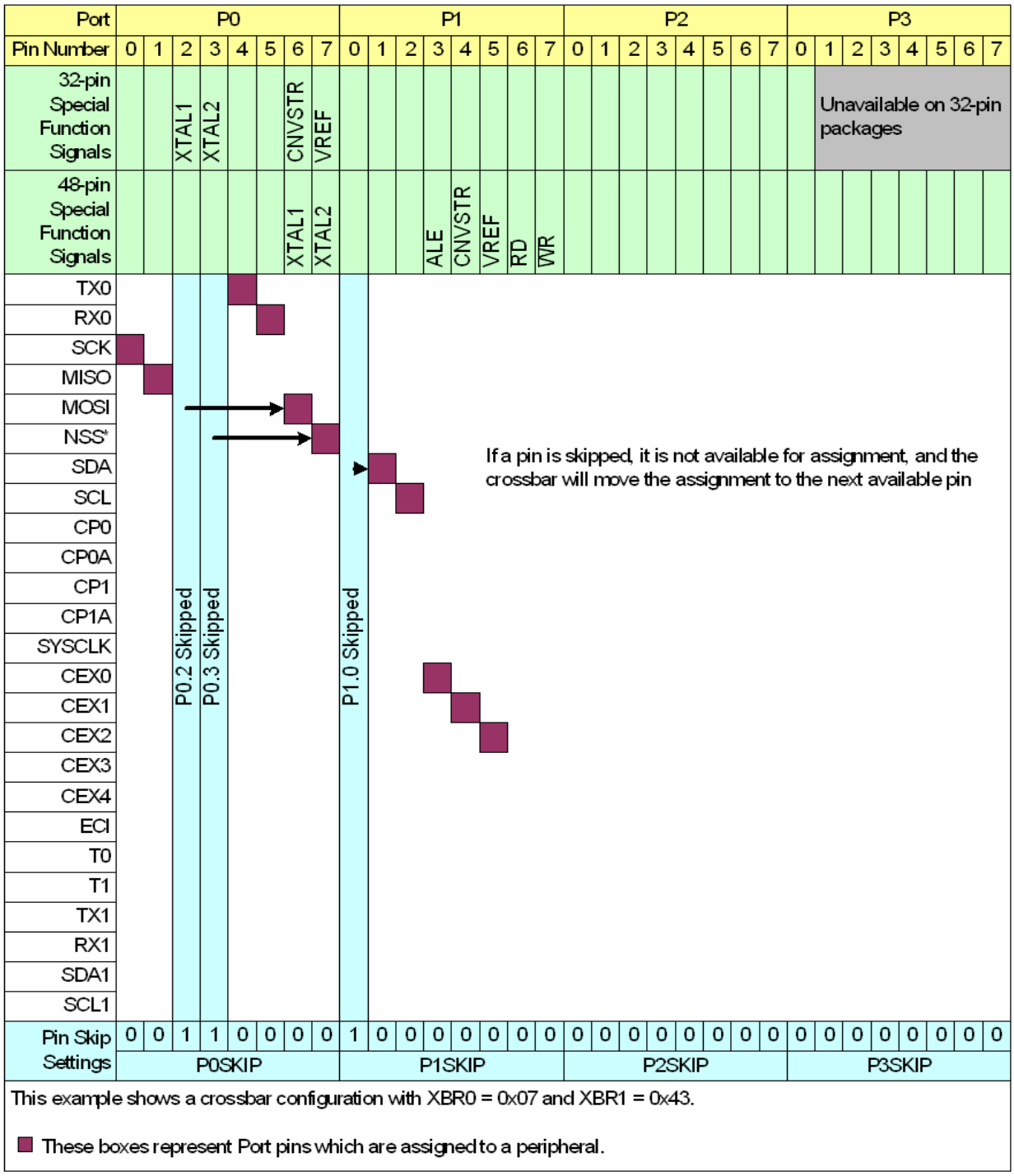

Figure 20.5. Crossbar Priority Decoder in Example Configuration (3 Pins Skipped)

20.2. Port I/O Initialization

Port I/O initialization consists of the following steps:

1. Select the input mode (analog or digital) for all Port pins, using the Port Input Mode register (PnMDIN).
2. Select the output mode (open-drain or push-pull) for all Port pins, using the Port Output Mode register (PnMDOUT).
3. Select any pins to be skipped by the I/O Crossbar using the Port Skip registers (PnSKIP).
4. Assign Port pins to desired peripherals (XBR0, XBR1).
5. Enable the Crossbar (XBARE = 1).

All Port pins must be configured as either analog or digital inputs. Any pins to be used as Comparator or ADC inputs should be configured as an analog inputs. When a pin is configured as an analog input, its weak pull-up, digital driver, and digital receiver are disabled. This process saves power and reduces noise on the analog input. Pins configured as digital inputs may still be used by analog peripherals; however this practice is not recommended. To configure a Port pin for digital input, write 0 to the corresponding bit in register PnMDOUT, and write 1 to the corresponding Port latch (register Pn).

Additionally, all analog input pins should be configured to be skipped by the Crossbar (accomplished by setting the associated bits in PnSKIP). Port input mode is set in the PnMDIN register, where a 1 indicates a digital input, and a 0 indicates an analog input. All pins default to digital inputs on reset.

The output driver characteristics of the I/O pins are defined using the Port Output Mode registers (PnMD-OUT). Each Port Output driver can be configured as either open drain or push-pull. This selection is required even for the digital resources selected in the XBRn registers, and is not automatic. The only exception to this are the SMBus (SDA, SCL, SDA1 and SCL1) pins, which are configured as open-drain regardless of the PnMDOUT settings. When the WEAKPUD bit in XBR1 is 0, a weak pull-up is enabled for all Port I/O configured as open-drain. WEAKPUD does not affect the push-pull Port I/O. Furthermore, the weak pull-up is turned off on an output that is driving a 0 to avoid unnecessary power dissipation.

Registers XBR0 and XBR1 must be loaded with the appropriate values to select the digital I/O functions required by the design. Setting the XBARE bit in XBR1 to 1 enables the Crossbar. Until the Crossbar is enabled, the external pins remain as standard Port I/O (in input mode), regardless of the XBRn Register settings. For given XBRn Register settings, one can determine the I/O pin-out using the Priority Decode Table; as an alternative, the Configuration Wizard utility of the Silicon Labs IDE software will determine the Port I/O pin-assignments based on the XBRn Register settings.

Important Note: The Crossbar must be enabled to use Ports P0, P1, P2, and P3 as standard Port I/O in output mode. These Port output drivers are disabled while the Crossbar is disabled. Port 4 always functions as standard GPIO.

SFR Definition 20.1. XBR0: Port I/O Crossbar Register 0

Bit	7	6	5	4	3	2	1	0
Name	CP1AE	CP1E	CP0AE	CP0E	SYSCKE	SMB0E	SPI0E	URT0E
Type	R/W	R/W	R/W	R/W	R/W	R/W	R/W	R/W
Reset	0	0	0	0	0	0	0	0

SFR Address = 0xE1; SFR Page = All Pages

Bit	Name	Function
7	CP1AE	**Comparator1 Asynchronous Output Enable.** 0: Asynchronous CP1A unavailable at Port pin. 1: Asynchronous CP1A routed to Port pin.
6	CP1E	**Comparator1 Output Enable.** 0: CP1 unavailable at Port pin. 1: CP1 routed to Port pin.
5	CP0AE	**Comparator0 Asynchronous Output Enable.** 0: Asynchronous CP0A unavailable at Port pin. 1: Asynchronous CP0A routed to Port pin.
4	CP0E	**Comparator0 Output Enable.** 0: CP0 unavailable at Port pin. 1: CP0 routed to Port pin.
3	SYSCKE	**$\overline{\text{SYSCLK}}$ Output Enable.** 0: $\overline{\text{SYSCLK}}$ unavailable at Port pin. 1: $\overline{\text{SYSCLK}}$ output routed to Port pin.
2	SMB0E	**SMBus I/O Enable.** 0: SMBus I/O unavailable at Port pins. 1: SMBus I/O routed to Port pins.
1	SPI0E	**SPI I/O Enable.** 0: SPI I/O unavailable at Port pins. 1: SPI I/O routed to Port pins. Note that the SPI can be assigned either 3 or 4 GPIO pins.
0	URT0E	**UART I/O Output Enable.** 0: UART I/O unavailable at Port pin. 1: UART TX0, RX0 routed to Port pins P0.4 and P0.5.

SFR Definition 20.2. XBR1: Port I/O Crossbar Register 1

Bit	7	6	5	4	3	2	1	0
Name	WEAKPUD	XBARE	T1E	T0E	ECIE	PCA0ME[2:0]		
Type	R/W	R/W	R/W	R/W	R/W	R/W	R/W	R/W
Reset	0	0	0	0	0	0	0	0

SFR Address = 0xE2; SFR Page = All Pages

Bit	Name	Function
7	WEAKPUD	**Port I/O Weak Pullup Disable.** 0: Weak Pullups enabled (except for Ports whose I/O are configured for analog mode). 1: Weak Pullups disabled.
6	XBARE	**Crossbar Enable.** 0: Crossbar disabled. 1: Crossbar enabled.
5	T1E	**T1 Enable.** 0: T1 unavailable at Port pin. 1: T1 routed to Port pin.
4	T0E	**T0 Enable.** 0: T0 unavailable at Port pin. 1: T0 routed to Port pin.
3	ECIE	**PCA0 External Counter Input Enable.** 0: ECI unavailable at Port pin. 1: ECI routed to Port pin.
2:0	PCA0ME[2:0]	**PCA Module I/O Enable Bits.** 000: All PCA I/O unavailable at Port pins. 001: CEX0 routed to Port pin. 010: CEX0, CEX1 routed to Port pins. 011: CEX0, CEX1, CEX2 routed to Port pins. 100: CEX0, CEX1, CEX2, CEX3 routed to Port pins. 101: CEX0, CEX1, CEX2, CEX3 routed to Port pins. 11x: Reserved.

SFR Definition 20.3. XBR2: Port I/O Crossbar Register 2

Bit	7	6	5	4	3	2	1	0
Name							SMB1E	URT1E
Type	R/W	R/W	R/W	R/W	R/W	R/W	R/W	R/W
Reset	0	0	0	0	0	0	0	0

SFR Address = 0xE3; SFR Page = All Pages

Bit	Name	Function
7:2	Reserved	Must write 000000b
1	SMB1E	**SMBus1 I/O Enable.** 0: SMBus1 I/O unavailable at Port pins. 1: SMBus1 I/O routed to Port pins.
0	URT1E	**UART1 I/O Enable.** 0: UART1 I/O unavailable at Port pins. 1: UART1 TX1, RX1 routed to Port pins.

20.3. General Purpose Port I/O

Port pins that remain unassigned by the Crossbar and are not used by analog peripherals can be used for general purpose I/O. Ports 3-0 are accessed through corresponding special function registers (SFRs) that are both byte addressable and bit addressable. Port 4 (C8051F388/A only) uses an SFR which is byte-addressable. When writing to a Port, the value written to the SFR is latched to maintain the output data value at each pin. When reading, the logic levels of the Port's input pins are returned regardless of the XBRn settings (i.e., even when the pin is assigned to another signal by the Crossbar, the Port register can always read its corresponding Port I/O pin). The exception to this is the execution of the read-modify-write instructions. The read-modify-write instructions when operating on a Port SFR are the following: ANL, ORL, XRL, JBC, CPL, INC, DEC, DJNZ and MOV, CLR or SETB, when the destination is an individual bit in a Port SFR. For these instructions, the value of the register (not the pin) is read, modified, and written back to the SFR.

SFR Definition 20.4. P0: Port 0

Bit	7	6	5	4	3	2	1	0
Name	P0[7:0]							
Type	R/W							
Reset	1	1	1	1	1	1	1	1

SFR Address = 0x80; SFR Page = All Pages; Bit Addressable

Bit	Name	Description	Write	Read
7:0	P0[7:0]	**Port 0 Data.** Sets the Port latch logic value or reads the Port pin logic state in Port cells configured for digital I/O.	0: Set output latch to logic LOW. 1: Set output latch to logic HIGH.	0: P0.n Port pin is logic LOW. 1: P0.n Port pin is logic HIGH.

SFR Definition 20.5. P0MDIN: Port 0 Input Mode

Bit	7	6	5	4	3	2	1	0
Name	P0MDIN[7:0]							
Type	R/W							
Reset	1	1	1	1	1	1	1	1

SFR Address = 0xF1; SFR Page = All Pages

Bit	Name	Function
7:0	P0MDIN[7:0]	**Analog Configuration Bits for P0.7–P0.0 (respectively).** Port pins configured for analog mode have their weak pullup, digital driver, and digital receiver disabled. 0: Corresponding P0.n pin is configured for analog mode. 1: Corresponding P0.n pin is not configured for analog mode.

SFR Definition 20.6. P0MDOUT: Port 0 Output Mode

Bit	7	6	5	4	3	2	1	0
Name	P0MDOUT[7:0]							
Type	R/W							
Reset	0	0	0	0	0	0	0	0

SFR Address = 0xA4; SFR Page = All Pages

Bit	Name	Function
7:0	P0MDOUT[7:0]	**Output Configuration Bits for P0.7–P0.0 (respectively).** These bits are ignored if the corresponding bit in register P0MDIN is logic 0. 0: Corresponding P0.n Output is open-drain. 1: Corresponding P0.n Output is push-pull.

SFR Definition 20.7. P0SKIP: Port 0 Skip

Bit	7	6	5	4	3	2	1	0
Name	P0SKIP[7:0]							
Type	R/W							
Reset	0	0	0	0	0	0	0	0

SFR Address = 0xD4; SFR Page = All Pages

Bit	Name	Function
7:0	P0SKIP[7:0]	**Port 0 Crossbar Skip Enable Bits.** These bits select Port 0 pins to be skipped by the Crossbar Decoder. Port pins used for analog, special functions or GPIO should be skipped by the Crossbar. 0: Corresponding P0.n pin is not skipped by the Crossbar. 1: Corresponding P0.n pin is skipped by the Crossbar.

SFR Definition 20.8. P1: Port 1

Bit	7	6	5	4	3	2	1	0
Name	P1[7:0]							
Type	R/W							
Reset	1	1	1	1	1	1	1	1

SFR Address = 0x90; SFR Page = All Pages; Bit Addressable

Bit	Name	Description	Write	Read
7:0	P1[7:0]	**Port 1 Data.** Sets the Port latch logic value or reads the Port pin logic state in Port cells configured for digital I/O.	0: Set output latch to logic LOW. 1: Set output latch to logic HIGH.	0: P1.n Port pin is logic LOW. 1: P1.n Port pin is logic HIGH.

SFR Definition 20.9. P1MDIN: Port 1 Input Mode

Bit	7	6	5	4	3	2	1	0
Name	P1MDIN[7:0]							
Type	R/W							
Reset	1*	1	1	1	1	1	1	1

SFR Address = 0xF2; SFR Page = All Pages

Bit	Name	Function
7:0	P1MDIN[7:0]	**Analog Configuration Bits for P1.7–P1.0 (respectively).** Port pins configured for analog mode have their weak pullup, digital driver, and digital receiver disabled. 0: Corresponding P1.n pin is configured for analog mode. 1: Corresponding P1.n pin is not configured for analog mode.

SFR Definition 20.10. P1MDOUT: Port 1 Output Mode

Bit	7	6	5	4	3	2	1	0
Name	P1MDOUT[7:0]							
Type	R/W							
Reset	0	0	0	0	0	0	0	0

SFR Address = 0xA5; SFR Page = All Pages

Bit	Name	Function
7:0	P1MDOUT[7:0]	**Output Configuration Bits for P1.7–P1.0 (respectively).** These bits are ignored if the corresponding bit in register P1MDIN is logic 0. 0: Corresponding P1.n Output is open-drain. 1: Corresponding P1.n Output is push-pull.

SFR Definition 20.11. P1SKIP: Port 1 Skip

Bit	7	6	5	4	3	2	1	0
Name	P1SKIP[7:0]							
Type	R/W							
Reset	0	0	0	0	0	0	0	0

SFR Address = 0xD5; SFR Page = All Pages

Bit	Name	Function
7:0	P1SKIP[7:0]	**Port 1 Crossbar Skip Enable Bits.** These bits select Port 1 pins to be skipped by the Crossbar Decoder. Port pins used for analog, special functions or GPIO should be skipped by the Crossbar. 0: Corresponding P1.n pin is not skipped by the Crossbar. 1: Corresponding P1.n pin is skipped by the Crossbar.

SFR Definition 20.12. P2: Port 2

Bit	7	6	5	4	3	2	1	0
Name	P2[7:0]							
Type	R/W							
Reset	1	1	1	1	1	1	1	1

SFR Address = 0xA0; SFR Page = All Pages; Bit Addressable

Bit	Name	Description	Write	Read
7:0	P2[7:0]	**Port 2 Data.** Sets the Port latch logic value or reads the Port pin logic state in Port cells configured for digital I/O.	0: Set output latch to logic LOW. 1: Set output latch to logic HIGH.	0: P2.n Port pin is logic LOW. 1: P2.n Port pin is logic HIGH.

SFR Definition 20.13. P2MDIN: Port 2 Input Mode

Bit	7	6	5	4	3	2	1	0
Name	P2MDIN[7:0]							
Type	R/W							
Reset	1	1	1	1	1	1	1	1

SFR Address = 0xF3; SFR Page = All Pages

Bit	Name	Function
7:0	P2MDIN[7:0]	**Analog Configuration Bits for P2.7–P2.0 (respectively).** Port pins configured for analog mode have their weak pullup, digital driver, and digital receiver disabled. 0: Corresponding P2.n pin is configured for analog mode. 1: Corresponding P2.n pin is not configured for analog mode.

SFR Definition 20.14. P2MDOUT: Port 2 Output Mode

Bit	7	6	5	4	3	2	1	0
Name	P2MDOUT[7:0]							
Type	R/W							
Reset	0	0	0	0	0	0	0	0

SFR Address = 0xA6; SFR Page = All Pages

Bit	Name	Function
7:0	P2MDOUT[7:0]	**Output Configuration Bits for P2.7–P2.0 (respectively).** These bits are ignored if the corresponding bit in register P2MDIN is logic 0. 0: Corresponding P2.n Output is open-drain. 1: Corresponding P2.n Output is push-pull.

SFR Definition 20.15. P2SKIP: Port 2 Skip

Bit	7	6	5	4	3	2	1	0
Name	P2SKIP[7:0]							
Type	R/W							
Reset	0	0	0	0	0	0	0	0

SFR Address = 0xD6; SFR Page = All Pages

Bit	Name	Function
7:0	P2SKIP[3:0]	**Port 2 Crossbar Skip Enable Bits.** These bits select Port 2 pins to be skipped by the Crossbar Decoder. Port pins used for analog, special functions or GPIO should be skipped by the Crossbar. 0: Corresponding P2.n pin is not skipped by the Crossbar. 1: Corresponding P2.n pin is skipped by the Crossbar.

SFR Definition 20.16. P3: Port 3

Bit	7	6	5	4	3	2	1	0
Name	P3[7:0]							
Type	R/W							
Reset	1	1	1	1	1	1	1	1

SFR Address = 0xB0; SFR Page = All Pages; Bit Addressable

Bit	Name	Description	Write	Read
7:0	P3[7:0]	**Port 3 Data.** Sets the Port latch logic value or reads the Port pin logic state in Port cells configured for digital I/O.	0: Set output latch to logic LOW. 1: Set output latch to logic HIGH.	0: P3.n Port pin is logic LOW. 1: P3.n Port pin is logic HIGH.

SFR Definition 20.17. P3MDIN: Port 3 Input Mode

Bit	7	6	5	4	3	2	1	0
Name	P3MDIN[7:0]							
Type	R/W							
Reset	1	1	1	1	1	1	1	1

SFR Address = 0xF4; SFR Page = All Pages

Bit	Name	Function
7:0	P3MDIN[7:0]	**Analog Configuration Bits for P3.7–P3.0 (respectively).** Port pins configured for analog mode have their weak pullup, digital driver, and digital receiver disabled. 0: Corresponding P3.n pin is configured for analog mode. 1: Corresponding P3.n pin is not configured for analog mode.

SFR Definition 20.18. P3MDOUT: Port 3 Output Mode

Bit	7	6	5	4	3	2	1	0
Name	P3MDOUT[7:0]							
Type	R/W							
Reset	0	0	0	0	0	0	0	0

SFR Address = 0xA7; SFR Page = All Pages

Bit	Name	Function
7:0	P3MDOUT[7:0]	**Output Configuration Bits for P3.7–P3.0 (respectively).** These bits are ignored if the corresponding bit in register P3MDIN is logic 0. 0: Corresponding P3.n Output is open-drain. 1: Corresponding P3.n Output is push-pull.

SFR Definition 20.19. P3SKIP: Port 3 Skip

Bit	7	6	5	4	3	2	1	0
Name	P3SKIP[7:0]							
Type	R/W							
Reset	0	0	0	0	0	0	0	0

SFR Address = 0xDF; SFR Page = All Pages

Bit	Name	Function
7:0	P3SKIP[3:0]	**Port 3 Crossbar Skip Enable Bits.** These bits select Port 3 pins to be skipped by the Crossbar Decoder. Port pins used for analog, special functions or GPIO should be skipped by the Crossbar. 0: Corresponding P3.n pin is not skipped by the Crossbar. 1: Corresponding P3.n pin is skipped by the Crossbar.

SFR Definition 20.20. P4: Port 4

Bit	7	6	5	4	3	2	1	0
Name	P4[7:0]							
Type	R/W							
Reset	1	1	1	1	1	1	1	1

SFR Address = 0xC7; SFR Page = All Pages

Bit	Name	Description	Write	Read
7:0	P4[7:0]	**Port 4 Data.** Sets the Port latch logic value or reads the Port pin logic state in Port cells configured for digital I/O.	0: Set output latch to logic LOW. 1: Set output latch to logic HIGH.	0: P4.n Port pin is logic LOW. 1: P4.n Port pin is logic HIGH.

SFR Definition 20.21. P4MDIN: Port 4 Input Mode

Bit	7	6	5	4	3	2	1	0
Name	P4MDIN[7:0]							
Type	R/W							
Reset	1	1	1	1	1	1	1	1

SFR Address = 0xF5; SFR Page = All Pages

Bit	Name	Function
7:0	P4MDIN[7:0]	**Analog Configuration Bits for P4.7–P4.0 (respectively).** Port pins configured for analog mode have their weak pullup, digital driver, and digital receiver disabled. 0: Corresponding P4.n pin is configured for analog mode. 1: Corresponding P4.n pin is not configured for analog mode.

SFR Definition 20.22. P4MDOUT: Port 4 Output Mode

Bit	7	6	5	4	3	2	1	0
Name	P4MDOUT[7:0]							
Type	R/W							
Reset	0	0	0	0	0	0	0	0

SFR Address = 0xAE; SFR Page = All Pages

Bit	Name	Function
7:0	P4MDOUT[7:0]	**Output Configuration Bits for P4.7–P4.0 (respectively).** These bits are ignored if the corresponding bit in register P4MDIN is logic 0. 0: Corresponding P4.n Output is open-drain. 1: Corresponding P4.n Output is push-pull.

21. SMBus0 and SMBus1 (I^2C Compatible)

The SMBus I/O interface is a two-wire, bi-directional serial bus. The SMBus is compliant with the System Management Bus Specification, version 1.1, and compatible with the I^2C serial bus. The C8051F388/9/A/B devices contain two SMBus interfaces, SMBus0 and SMBus1.

Reads and writes to the SMBus by the system controller are byte oriented with the SMBus interface autonomously controlling the serial transfer of the data. Data can be transferred at up to 1/20th of the system clock as a master or slave (this can be faster than allowed by the SMBus specification, depending on the system clock used). A method of extending the clock-low duration is available to accommodate devices with different speed capabilities on the same bus.

The SMBus may operate as a master and/or slave, and may function on a bus with multiple masters. The SMBus provides control of SDA (serial data), SCL (serial clock) generation and synchronization, arbitration logic, and START/STOP control and generation. The SMBus peripherals can be fully driven by software (i.e., software accepts/rejects slave addresses, and generates ACKs), or hardware slave address recognition and automatic ACK generation can be enabled to minimize software overhead. A block diagram of the SMBus0 peripheral and the associated SFRs is shown in Figure 21.1. SMBus1 is identical, with the exception of the available timer options for the clock source, and the timer used to implement the SCL low timeout feature. Refer to the specific SFR definitions for more details.

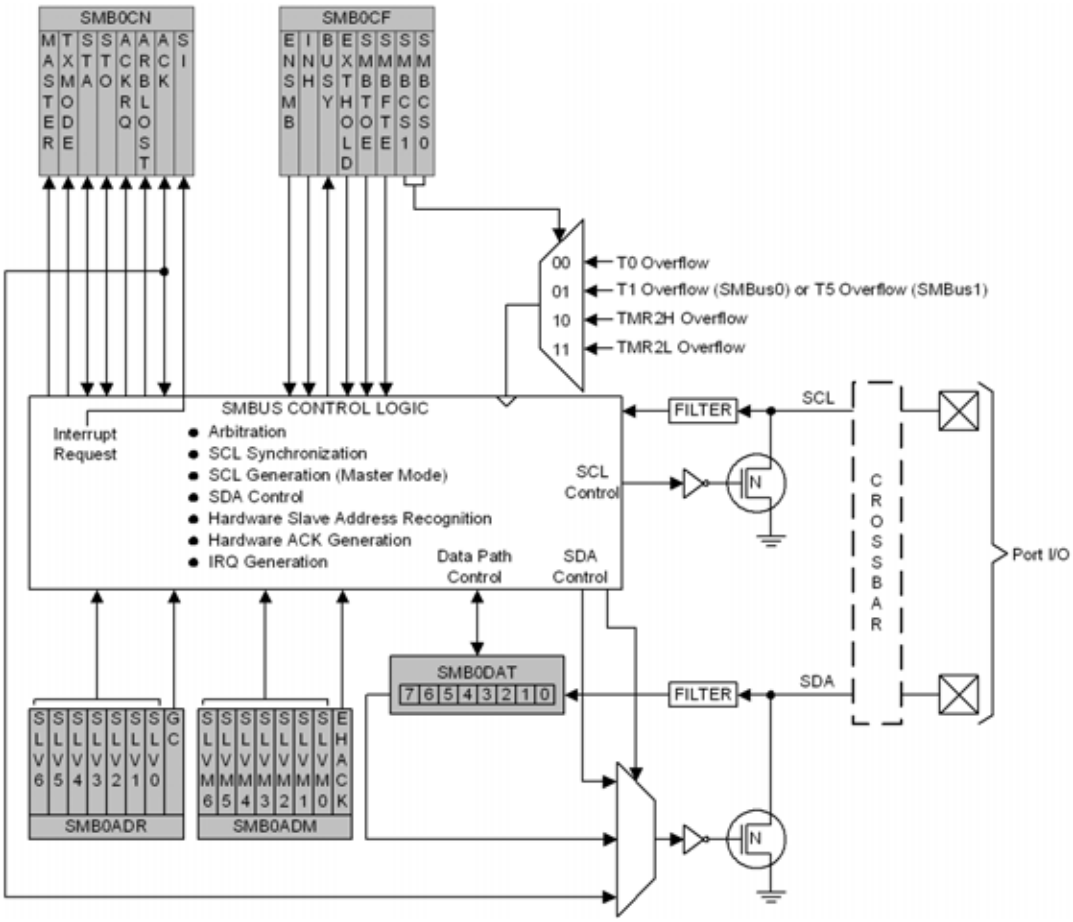

Figure 21.1. SMBus Block Diagram

21.1. Supporting Documents

It is assumed the reader is familiar with or has access to the following supporting documents:

1. The I^2C-Bus and How to Use It (including specifications), Philips Semiconductor.
2. The I^2C-Bus Specification—Version 2.0, Philips Semiconductor.
3. System Management Bus Specification—Version 1.1, SBS Implementers Forum.

21.2. SMBus Configuration

Figure 21.2 shows a typical SMBus configuration. The SMBus specification allows any recessive voltage between 3.0 V and 5.0 V; different devices on the bus may operate at different voltage levels. The bi-directional SCL (serial clock) and SDA (serial data) lines must be connected to a positive power supply voltage through a pullup resistor or similar circuit. Every device connected to the bus must have an open-drain or open-collector output for both the SCL and SDA lines, so that both are pulled high (recessive state) when the bus is free. The maximum number of devices on the bus is limited only by the requirement that the rise and fall times on the bus not exceed 300 ns and 1000 ns, respectively.

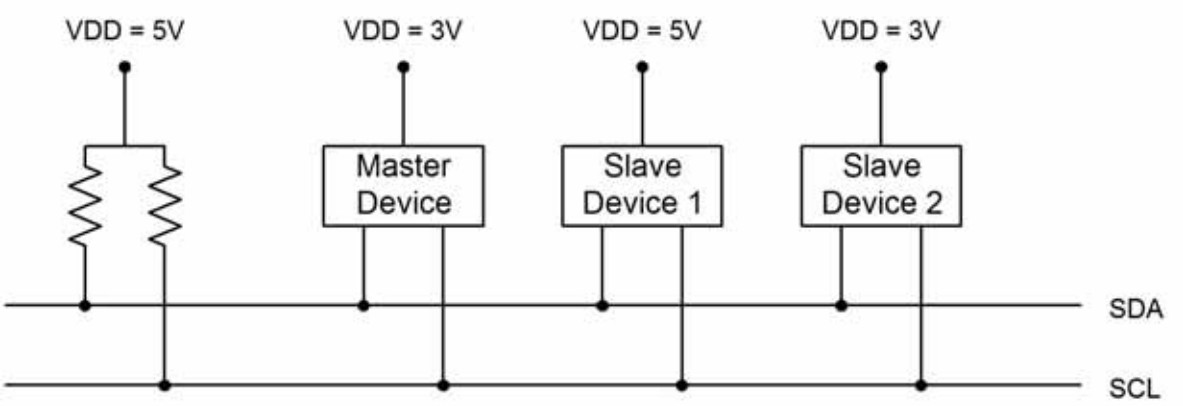

Figure 21.2. Typical SMBus Configuration

21.3. SMBus Operation

Two types of data transfers are possible: data transfers from a master transmitter to an addressed slave receiver (WRITE), and data transfers from an addressed slave transmitter to a master receiver (READ). The master device initiates both types of data transfers and provides the serial clock pulses on SCL. The SMBus interface may operate as a master or a slave, and multiple master devices on the same bus are supported. If two or more masters attempt to initiate a data transfer simultaneously, an arbitration scheme is employed with a single master always winning the arbitration. It is not necessary to specify one device as the Master in a system; any device who transmits a START and a slave address becomes the master for the duration of that transfer.

A typical SMBus transaction consists of a START condition followed by an address byte (Bits7–1: 7-bit slave address; Bit0: R/W direction bit), one or more bytes of data, and a STOP condition. Bytes that are received (by a master or slave) are acknowledged (ACK) with a low SDA during a high SCL (see Figure 21.3). If the receiving device does not ACK, the transmitting device will read a NACK (not acknowledge), which is a high SDA during a high SCL.

The direction bit (R/W) occupies the least-significant bit position of the address byte. The direction bit is set to logic 1 to indicate a "READ" operation and cleared to logic 0 to indicate a "WRITE" operation.

All transactions are initiated by a master, with one or more addressed slave devices as the target. The master generates the START condition and then transmits the slave address and direction bit. If the transaction is a WRITE operation from the master to the slave, the master transmits the data a byte at a time waiting for an ACK from the slave at the end of each byte. For READ operations, the slave transmits the data waiting for an ACK from the master at the end of each byte. At the end of the data transfer, the master generates a STOP condition to terminate the transaction and free the bus. Figure 21.3 illustrates a typical SMBus transaction.

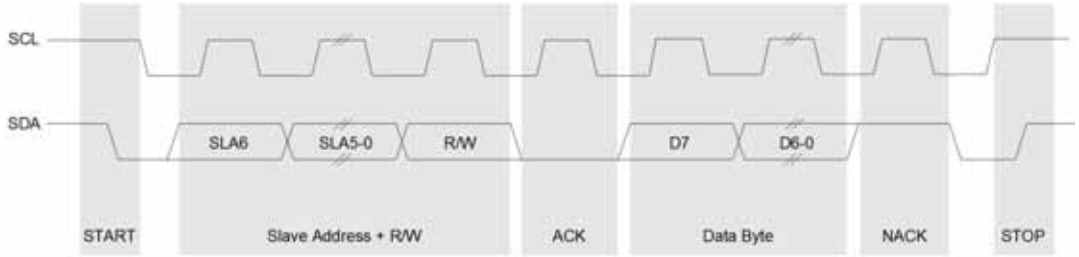

Figure 21.3. SMBus Transaction

21.3.1. Transmitter Vs. Receiver

On the SMBus communications interface, a device is the “transmitter” when it is sending an address or data byte to another device on the bus. A device is a “receiver” when an address or data byte is being sent to it from another device on the bus. The transmitter controls the SDA line during the address or data byte. After each byte of address or data information is sent by the transmitter, the receiver sends an ACK or NACK bit during the ACK phase of the transfer, during which time the receiver controls the SDA line.

21.3.2. Arbitration

A master may start a transfer only if the bus is free. The bus is free after a STOP condition or after the SCL and SDA lines remain high for a specified time (see Section “21.3.5. SCL High (SMBus Free) Timeout” on page 169). In the event that two or more devices attempt to begin a transfer at the same time, an arbitration scheme is employed to force one master to give up the bus. The master devices continue transmitting until one attempts a HIGH while the other transmits a LOW. Since the bus is open-drain, the bus will be pulled LOW. The master attempting the HIGH will detect a LOW SDA and lose the arbitration. The winning master continues its transmission without interruption; the losing master becomes a slave and receives the rest of the transfer if addressed. This arbitration scheme is non-destructive: one device always wins, and no data is lost.

21.3.3. Clock Low Extension

SMBus provides a clock synchronization mechanism, similar to I2C, which allows devices with different speed capabilities to coexist on the bus. A clock-low extension is used during a transfer in order to allow slower slave devices to communicate with faster masters. The slave may temporarily hold the SCL line LOW to extend the clock low period, effectively decreasing the serial clock frequency.

21.3.4. SCL Low Timeout

If the SCL line is held low by a slave device on the bus, no further communication is possible. Furthermore, the master cannot force the SCL line high to correct the error condition. To solve this problem, the SMBus protocol specifies that devices participating in a transfer must detect any clock cycle held low longer than 25 ms as a “timeout” condition. Devices that have detected the timeout condition must reset the communication no later than 10 ms after detecting the timeout condition.

For the SMBus0 interface, Timer 3 is used to implement SCL low timeouts. Timer 4 is used on the SMBus1 interface for SCL low timeouts. The SCL low timeout feature is enabled by setting the SMBnTOE bit in SMBnCF. The associated timer is forced to reload when SCL is high, and allowed to count when SCL is

low. With the associated timer enabled and configured to overflow after 25 ms (and SMBnTOE set), the timer interrupt service routine can be used to reset (disable and re-enable) the SMBus in the event of an SCL low timeout.

21.3.5. SCL High (SMBus Free) Timeout

The SMBus specification stipulates that if the SCL and SDA lines remain high for more that 50 µs, the bus is designated as free. When the SMBnFTE bit in SMBnCF is set, the bus will be considered free if SCL and SDA remain high for more than 10 SMBus clock source periods (as defined by the timer configured for the SMBus clock source). If the SMBus is waiting to generate a Master START, the START will be generated following this timeout. A clock source is required for free timeout detection, even in a slave-only implementation.

21.4. Using the SMBus

The SMBus can operate in both Master and Slave modes. The interface provides timing and shifting control for serial transfers; higher level protocol is determined by user software. The SMBus interface provides the following application-independent features:

- Byte-wise serial data transfers
- Clock signal generation on SCL (Master Mode only) and SDA data synchronization
- Timeout/bus error recognition, as defined by the SMB0CF configuration register
- START/STOP timing, detection, and generation
- Bus arbitration
- Interrupt generation
- Status information
- Optional hardware recognition of slave address and automatic acknowledgement of address/data

SMBus interrupts are generated for each data byte or slave address that is transferred. When hardware acknowledgment is disabled, the point at which the interrupt is generated depends on whether the hardware is acting as a data transmitter or receiver. When a transmitter (i.e., sending address/data, receiving an ACK), this interrupt is generated after the ACK cycle so that software may read the received ACK value; when receiving data (i.e., receiving address/data, sending an ACK), this interrupt is generated before the ACK cycle so that software may define the outgoing ACK value. If hardware acknowledgment is enabled, these interrupts are always generated after the ACK cycle. See Section 21.5 for more details on transmission sequences.

Interrupts are also generated to indicate the beginning of a transfer when a master (START generated), or the end of a transfer when a slave (STOP detected). Software should read the SMBnCN (SMBus Control register) to find the cause of the SMBus interrupt. The SMBnCN register is described in Section 21.4.3; Table 21.5 provides a quick SMBnCN decoding reference.

21.4.1. SMBus Configuration Register

The SMBus Configuration register (SMBnCF) is used to enable the SMBus Master and/or Slave modes, select the SMBus clock source, and select the SMBus timing and timeout options. When the ENSMB bit is set, the SMBus is enabled for all master and slave events. Slave events may be disabled by setting the INH bit. With slave events inhibited, the SMBus interface will still monitor the SCL and SDA pins; however, the interface will NACK all received addresses and will not generate any slave interrupts. When the INH bit is set, all slave events will be inhibited following the next START (interrupts will continue for the duration of the current transfer).

Table 21.1. SMBus Clock Source Selection

SMBnCS1	SMBnCS0	SMBus0 Clock Source	SMBus1 Clock Source
0	0	Timer 0 Overflow	Timer 0 Overflow
0	1	Timer 1 Overflow	Timer 5 Overflow
1	0	Timer 2 High Byte Overflow	Timer 2 High Byte Overflow
1	1	Timer 2 Low Byte Overflow	Timer 2 Low Byte Overflow

The SMBnCS1–0 bits select the SMBus clock source, which is used only when operating as a master or when the Free Timeout detection is enabled. When operating as a master, overflows from the selected source determine the absolute minimum SCL low and high times as defined in Equation 21.1.The selected clock source may be shared by other peripherals so long as the timer is left running at all times. For example, Timer 1 overflows may generate the SMBus0 and SMBus1 clock rates simultaneously. Timer configuration is covered in Section “25. Timers” on page 224.

$$T_{HighMin} = T_{LowMin} = \frac{1}{f_{ClockSourceOverflow}}$$

Equation 21.1. Minimum SCL High and Low Times

The selected clock source should be configured to establish the minimum SCL High and Low times as per Equation 21.1. When the interface is operating as a master (and SCL is not driven or extended by any other devices on the bus), the typical SMBus bit rate is approximated by Equation 21.2.

$$BitRate = \frac{f_{ClockSourceOverflow}}{3}$$

Equation 21.2. Typical SMBus Bit Rate

Figure 21.4 shows the typical SCL generation described by Equation 21.2. Notice that T_{HIGH} is typically twice as large as T_{LOW}. The actual SCL output may vary due to other devices on the bus (SCL may be extended low by slower slave devices, or driven low by contending master devices). The bit rate when operating as a master will never exceed the limits defined by equation Equation 21.1.

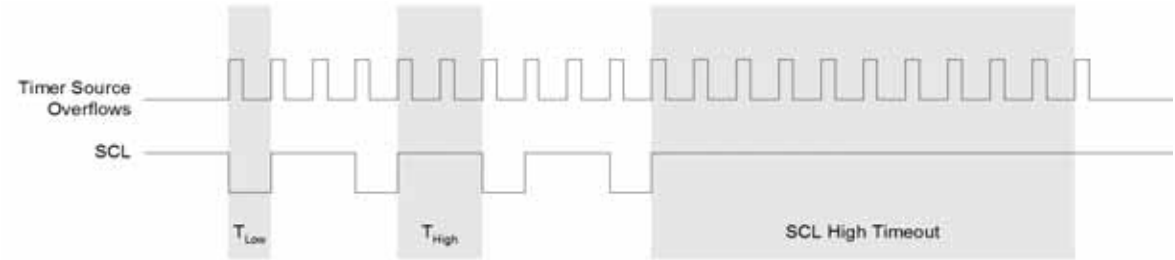

Figure 21.4. Typical SMBus SCL Generation

Setting the EXTHOLD bit extends the minimum setup and hold times for the SDA line. The minimum SDA setup time defines the absolute minimum time that SDA is stable before SCL transitions from low-to-high. The minimum SDA hold time defines the absolute minimum time that the current SDA value remains stable after SCL transitions from high-to-low. EXTHOLD should be set so that the minimum setup and hold times meet the SMBus Specification requirements of 250 ns and 300 ns, respectively. Table 21.2 shows the min-

imum setup and hold times for the two EXTHOLD settings. Setup and hold time extensions are typically necessary when SYSCLK is above 10 MHz.

Table 21.2. Minimum SDA Setup and Hold Times

EXTHOLD	Minimum SDA Setup Time	Minimum SDA Hold Time
0	T_{low} – 4 system clocks or 1 system clock + s/w delay*	3 system clocks
1	11 system clocks	12 system clocks
Note: Setup Time for ACK bit transmissions and the MSB of all data transfers. When using software acknowledgment, the s/w delay occurs between the time SMB0DAT or ACK is written and when SI is cleared. Note that if SI is cleared in the same write that defines the outgoing ACK value, s/w delay is zero.		

With the SMBnTOE bit set, Timer 3 (SMBus0) and Timer 5 (SMBus1) should be configured to overflow after 25 ms in order to detect SCL low timeouts (see Section “21.3.4. SCL Low Timeout” on page 168). The SMBus interface will force the associated timer to reload while SCL is high, and allow the timer to count when SCL is low. The timer interrupt service routine should be used to reset SMBus communication by disabling and re-enabling the SMBus.

SMBus Free Timeout detection can be enabled by setting the SMBnFTE bit. When this bit is set, the bus will be considered free if SDA and SCL remain high for more than 10 SMBus clock source periods (see Figure 21.4).

21.4.2. SMBus Timing Control Register

The SMBus Timing Control Register (SMBTC) is used to restrict the detection of a START condition under certain circumstances. In some systems where there is significant mis-match between the impedance or the capacitance on the SDA and SCL lines, it may be possible for SCL to fall after SDA during an address or data transfer. Such an event can cause a false START detection on the bus. These kind of events are not expected in a standard SMBus or I2C-compliant system. **In most systems this parameter should not be adjusted, and it is recommended that it be left at its default value.**

By default, if the SCL falling edge is detected after the falling edge of SDA (i.e. one SYSCLK cycle or more), the device will detect this as a START condition. The SMBTC register is used to increase the amount of hold time that is required between SDA and SCL falling before a START is recognized. An additional 2, 4, or 8 SYSCLKs can be added to prevent false START detection in systems where the bus conditions warrant this.

SFR Definition 21.1. SMB0CF: SMBus Clock/Configuration

Bit	7	6	5	4	3	2	1	0
Name	ENSMB0	INH0	BUSY0	EXTHOLD0	SMB0TOE	SMB0FTE	SMB0CS[1:0]	
Type	R/W	R/W	R	R/W	R/W	R/W	R/W	
Reset	0	0	0	0	0	0	0	0

SFR Address = 0xC1; SFR Page = 0

Bit	Name	Function
7	ENSMB0	**SMBus0 Enable.** This bit enables the SMBus0 interface when set to 1. When enabled, the interface constantly monitors the SDA0 and SCL0 pins.
6	INH0	**SMBus0 Slave Inhibit.** When this bit is set to logic 1, the SMBus0 does not generate an interrupt when slave events occur. This effectively removes the SMBus0 slave from the bus. Master Mode interrupts are not affected.
5	BUSY0	**SMBus0 Busy Indicator.** This bit is set to logic 1 by hardware when a transfer is in progress. It is cleared to logic 0 when a STOP or free-timeout is sensed.
4	EXTHOLD0	**SMBus0 Setup and Hold Time Extension Enable.** This bit controls the SDA0 setup and hold times according to Table 21.2. 0: SDA0 Extended Setup and Hold Times disabled. 1: SDA0 Extended Setup and Hold Times enabled.
3	SMB0TOE	**SMBus0 SCL Timeout Detection Enable.** This bit enables SCL low timeout detection. If set to logic 1, the SMBus0 forces Timer 3 to reload while SCL0 is high and allows Timer 3 to count when SCL0 goes low. If Timer 3 is configured to Split Mode, only the High Byte of the timer is held in reload while SCL0 is high. Timer 3 should be programmed to generate interrupts at 25 ms, and the Timer 3 interrupt service routine should reset SMBus0 communication.
2	SMB0FTE	**SMBus0 Free Timeout Detection Enable.** When this bit is set to logic 1, the bus will be considered free if SCL0 and SDA0 remain high for more than 10 SMBus clock source periods.
1:0	SMB0CS[1:0]	**SMBus0 Clock Source Selection.** These two bits select the SMBus0 clock source, which is used to generate the SMBus0 bit rate. The selected device should be configured according to Equation 21.1. 00: Timer 0 Overflow 01: Timer 1 Overflow 10: Timer 2 High Byte Overflow 11: Timer 2 Low Byte Overflow

SFR Definition 21.2. SMB1CF: SMBus Clock/Configuration

Bit	7	6	5	4	3	2	1	0
Name	ENSMB1	INH1	BUSY1	EXTHOLD1	SMB1TOE	SMB1FTE	SMB1CS[1:0]	
Type	R/W	R/W	R	R/W	R/W	R/W	R/W	
Reset	0	0	0	0	0	0	0	0

SFR Address = 0xC1; SFR Page = F

Bit	Name	Function
7	ENSMB1	**SMBus1 Enable.** This bit enables the SMBus1 interface when set to 1. When enabled, the interface constantly monitors the SDA1 and SCL1 pins.
6	INH1	**SMBus1 Slave Inhibit.** When this bit is set to logic 1, the SMBus1 does not generate an interrupt when slave events occur. This effectively removes the SMBus1 slave from the bus. Master Mode interrupts are not affected.
5	BUSY1	**SMBus1 Busy Indicator.** This bit is set to logic 1 by hardware when a transfer is in progress. It is cleared to logic 0 when a STOP or free-timeout is sensed.
4	EXTHOLD1	**SMBus1 Setup and Hold Time Extension Enable.** This bit controls the SDA1 setup and hold times according to Table 21.2. 0: SDA1 Extended Setup and Hold Times disabled. 1: SDA1 Extended Setup and Hold Times enabled.
3	SMB1TOE	**SMBus1 SCL Timeout Detection Enable.** This bit enables SCL low timeout detection. If set to logic 1, the SMBus1 forces Timer 4 to reload while SCL1 is high and allows Timer 4 to count when SCL1 goes low. If Timer 4 is configured to Split Mode, only the High Byte of the timer is held in reload while SCL1 is high. Timer 4 should be programmed to generate interrupts at 25 ms, and the Timer 4 interrupt service routine should reset SMBus1 communication.
2	SMB1FTE	**SMBus1 Free Timeout Detection Enable.** When this bit is set to logic 1, the bus will be considered free if SCL1 and SDA1 remain high for more than 10 SMBus clock source periods.
1:0	SMB1CS[1:0]	**SMBus1 Clock Source Selection.** These two bits select the SMBus1 clock source, which is used to generate the SMBus1 bit rate. The selected device should be configured according to Equation 21.1. 00: Timer 0 Overflow 01: Timer 5 Overflow 10: Timer 2 High Byte Overflow 11: Timer 2 Low Byte Overflow

SFR Definition 21.3. SMBTC: SMBus Timing Control

Bit	7	6	5	4	3	2	1	0
Name					SMB1SDD[1:0]		SMB0SDD[1:0]	
Type	R	R	R	R	R/W		R/W	
Reset	0	0	0	0	0	0	0	0

SFR Address = 0xB9; SFR Page = F

Bit	Name	Function
7:4	Unused	Read = 0000b; Write = don't care.
3:2	SMB1SDD[1:0]	**SMBus1 Start Detection Window** These bits increase the hold time requirement between SDA falling and SCL falling for START detection. 00: No additional hold time requirement (0-1 SYSCLK). 01: Increase hold time window to 2-3 SYSCLKs. 10: Increase hold time window to 4-5 SYSCLKs. 11: Increase hold time window to 8-9 SYSCLKs.
1:0	SMB0SDD[1:0]	**SMBus0 Start Detection Window** These bits increase the hold time requirement between SDA falling and SCL falling for START detection. 00: No additional hold time window (0-1 SYSCLK). 01: Increase hold time window to 2-3 SYSCLKs. 10: Increase hold time window to 4-5 SYSCLKs. 11: Increase hold time window to 8-9 SYSCLKs.

21.4.3. SMBnCN Control Register

SMBnCN is used to control the interface and to provide status information (see SFR Definition 21.4). The higher four bits of SMBnCN (MASTER, TXMODE, STA, and STO) form a status vector that can be used to jump to service routines. MASTER indicates whether a device is the master or slave during the current transfer. TXMODE indicates whether the device is transmitting or receiving data for the current byte.

STA and STO indicate that a START and/or STOP has been detected or generated since the last SMBus interrupt. STA and STO are also used to generate START and STOP conditions when operating as a master. Writing a 1 to STA will cause the SMBus interface to enter Master Mode and generate a START when the bus becomes free (STA is not cleared by hardware after the START is generated). Writing a 1 to STO while in Master Mode will cause the interface to generate a STOP and end the current transfer after the next ACK cycle. If STO and STA are both set (while in Master Mode), a STOP followed by a START will be generated.

The ARBLOST bit indicates that the interface has lost an arbitration. This may occur anytime the interface is transmitting (master or slave). A lost arbitration while operating as a slave indicates a bus error condition. ARBLOST is cleared by hardware each time SI is cleared.

The SI bit (SMBus Interrupt Flag) is set at the beginning and end of each transfer, after each byte frame, or when an arbitration is lost; see Table 21.3 for more details.

Important Note About the SI Bit: The SMBus interface is stalled while SI is set; thus SCL is held low, and the bus is stalled until software clears SI.

21.4.3.1. Software ACK Generation

When the EHACK bit in register SMBnADM is cleared to 0, the firmware on the device must detect incoming slave addresses and ACK or NACK the slave address and incoming data bytes. As a receiver, writing the ACK bit defines the outgoing ACK value; as a transmitter, reading the ACK bit indicates the value received during the last ACK cycle. ACKRQ is set each time a byte is received, indicating that an outgoing ACK value is needed. When ACKRQ is set, software should write the desired outgoing value to the ACK bit before clearing SI. A NACK will be generated if software does not write the ACK bit before clearing SI. SDA will reflect the defined ACK value immediately following a write to the ACK bit; however SCL will remain low until SI is cleared. If a received slave address is not acknowledged, further slave events will be ignored until the next START is detected.

21.4.3.2. Hardware ACK Generation

When the EHACK bit in register SMB0ADM is set to 1, automatic slave address recognition and ACK generation is enabled. More detail about automatic slave address recognition can be found in Section 21.4.4. As a receiver, the value currently specified by the ACK bit will be automatically sent on the bus during the ACK cycle of an incoming data byte. As a transmitter, reading the ACK bit indicates the value received on the last ACK cycle. The ACKRQ bit is not used when hardware ACK generation is enabled. If a received slave address is NACKed by hardware, further slave events will be ignored until the next START is detected, and no interrupt will be generated.

Table 21.3 lists all sources for hardware changes to the SMBnCN bits. Refer to Table 21.5 for SMBus status decoding using the SMBnCN register.

SFR Definition 21.4. SMB0CN: SMBus Control

Bit	7	6	5	4	3	2	1	0
Name	MASTER0	TXMODE0	STA0	STO0	ACKRQ0	ARBLOST0	ACK0	SI0
Type	R	R	R/W	R/W	R	R	R/W	R/W
Reset	0	0	0	0	0	0	0	0

SFR Address = 0xC0; SFR Page = 0; Bit-Addressable

Bit	Name	Description	Read	Write
7	MASTER0	**SMBus0 Master/Slave Indicator.** This read-only bit indicates when the SMBus0 is operating as a master.	0: SMBus0 operating in slave mode. 1: SMBus0 operating in master mode.	N/A
6	TXMODE0	**SMBus0 Transmit Mode Indicator.** This read-only bit indicates when the SMBus0 is operating as a transmitter.	0: SMBus0 in Receiver Mode. 1: SMBus0 in Transmitter Mode.	N/A
5	STA0	**SMBus0 Start Flag.**	0: No Start or repeated Start detected. 1: Start or repeated Start detected.	0: No Start generated. 1: When Configured as a Master, initiates a START or repeated START.
4	STO0	**SMBus0 Stop Flag.**	0: No Stop condition detected. 1: Stop condition detected (if in Slave Mode) or pending (if in Master Mode).	0: No STOP condition is transmitted. 1: When configured as a Master, causes a STOP condition to be transmitted after the next ACK cycle. Cleared by Hardware.
3	ACKRQ0	**SMBus0 Acknowledge Request.**	0: No ACK requested 1: ACK requested	N/A
2	ARBLOST0	**SMBus0 Arbitration Lost Indicator.**	0: No arbitration error. 1: Arbitration Lost	N/A
1	ACK0	**SMBus0 Acknowledge.**	0: NACK received. 1: ACK received.	0: Send NACK 1: Send ACK
0	SI0	**SMBus0 Interrupt Flag.** This bit is set by hardware under the conditions listed in Table 15.3. SI0 must be cleared by software. While SI0 is set, SCL0 is held low and the SMBus0 is stalled.	0: No interrupt pending 1: Interrupt Pending	0: Clear interrupt, and initiate next state machine event. 1: Force interrupt.

SFR Definition 21.5. SMB1CN: SMBus Control

Bit	7	6	5	4	3	2	1	0
Name	MASTER1	TXMODE1	STA1	STO1	ACKRQ1	ARBLOST1	ACK1	SI1
Type	R	R	R/W	R/W	R	R	R/W	R/W
Reset	0	0	0	0	0	0	0	0

SFR Address = 0xC0; SFR Page = F; Bit-Addressable

Bit	Name	Description	Read	Write
7	MASTER1	**SMBus1 Master/Slave Indicator.** This read-only bit indicates when the SMBus1 is operating as a master.	0: SMBus1 operating in slave mode. 1: SMBus1 operating in master mode.	N/A
6	TXMODE1	**SMBus1 Transmit Mode Indicator.** This read-only bit indicates when the SMBus1 is operating as a transmitter.	0: SMBus1 in Receiver Mode. 1: SMBus1 in Transmitter Mode.	N/A
5	STA1	**SMBus1 Start Flag.**	0: No Start or repeated Start detected. 1: Start or repeated Start detected.	0: No Start generated. 1: When Configured as a Master, initiates a START or repeated START.
4	STO1	**SMBus1 Stop Flag.**	0: No Stop condition detected. 1: Stop condition detected (if in Slave Mode) or pending (if in Master Mode).	0: No STOP condition is transmitted. 1: When configured as a Master, causes a STOP condition to be transmitted after the next ACK cycle. Cleared by Hardware.
3	ACKRQ1	**SMBus1 Acknowledge Request.**	0: No ACK requested 1: ACK requested	N/A
2	ARBLOST1	**SMBus1 Arbitration Lost Indicator.**	0: No arbitration error. 1: Arbitration Lost	N/A
1	ACK1	**SMBus1 Acknowledge.**	0: NACK received. 1: ACK received.	0: Send NACK 1: Send ACK
0	SI1	**SMBus1 Interrupt Flag.** This bit is set by hardware under the conditions listed in Table 15.3. SI1 must be cleared by software. While SI1 is set, SCL1 is held low and the SMBus1 is stalled.	0: No interrupt pending 1: Interrupt Pending	0: Clear interrupt, and initiate next state machine event. 1: Force interrupt.

Table 21.3. Sources for Hardware Changes to SMBnCN

Bit	Set by Hardware When:	Cleared by Hardware When:
MASTERn	■ A START is generated.	■ A STOP is generated. ■ Arbitration is lost.
TXMODEn	■ START is generated. ■ SMBnDAT is written before the start of an SMBus frame.	■ A START is detected. ■ Arbitration is lost. ■ SMBnDAT is not written before the start of an SMBus frame.
STAn	■ A START followed by an address byte is received.	■ Must be cleared by software.
STOn	■ A STOP is detected while addressed as a slave. ■ Arbitration is lost due to a detected STOP.	■ A pending STOP is generated.
ACKRQn	■ A byte has been received and an ACK response value is needed (only when hardware ACK is not enabled).	■ After each ACK cycle.
ARBLOSTn	■ A repeated START is detected as a MASTER when STAn is low (unwanted repeated START). ■ SCLn is sensed low while attempting to generate a STOP or repeated START condition. ■ SDAn is sensed low while transmitting a 1 (excluding ACK bits).	■ Each time SIn is cleared.
ACKn	■ The incoming ACK value is low (ACKNOWLEDGE).	■ The incoming ACK value is high (NOT ACKNOWLEDGE).
SIn	■ A START has been generated. ■ Lost arbitration. ■ A byte has been transmitted and an ACK/NACK received. ■ A byte has been received. ■ A START or repeated START followed by a slave address + R/W has been received. ■ A STOP has been received.	■ Must be cleared by software.

21.4.4. Hardware Slave Address Recognition

The SMBus hardware has the capability to automatically recognize incoming slave addresses and send an ACK without software intervention. Automatic slave address recognition is enabled by setting the EHACK bit in register SMB0ADM to 1. This will enable both automatic slave address recognition and automatic hardware ACK generation for received bytes (as a master or slave). More detail on automatic hardware ACK generation can be found in Section 21.4.3.2.

The registers used to define which address(es) are recognized by the hardware are the SMBus Slave Address register and the SMBus Slave Address Mask register. A single address or range of addresses (including the General Call Address 0x00) can be specified using these two registers. The most-significant seven bits of the two registers are used to define which addresses will be ACKed. A 1 in bit positions of the slave address mask SLVM[6:0] enable a comparison between the received slave address and the hardware's slave address SLV[6:0] for those bits. A 0 in a bit of the slave address mask means that bit will be treated as a "don't care" for comparison purposes. In this case, either a 1 or a 0 value are acceptable on

the incoming slave address. Additionally, if the GCn bit in register SMBnADR is set to 1, hardware will recognize the General Call Address (0x00). Table 21.4 shows some example parameter settings and the slave addresses that will be recognized by hardware under those conditions.

Table 21.4. Hardware Address Recognition Examples (EHACK = 1)

Hardware Slave Address SLVn[6:0]	Slave Address Mask SLVMn[6:0]	GCn bit	Slave Addresses Recognized by Hardware
0x34	0x7F	0	0x34
0x34	0x7F	1	0x34, 0x00 (General Call)
0x34	0x7E	0	0x34, 0x35
0x34	0x7E	1	0x34, 0x35, 0x00 (General Call)
0x70	0x73	0	0x70, 0x74, 0x78, 0x7C

SFR Definition 21.6. SMB0ADR: SMBus0 Slave Address

Bit	7	6	5	4	3	2	1	0
Name	SLV0[6:0]							GC0
Type	R/W							R/W
Reset	0	0	0	0	0	0	0	0

SFR Address = 0xCF; SFR Page = 0

Bit	Name	Function
7:1	SLV0[6:0]	**SMBus Hardware Slave Address.** Defines the SMBus0 Slave Address(es) for automatic hardware acknowledgment. Only address bits which have a 1 in the corresponding bit position in SLVM0[6:0] are checked against the incoming address. This allows multiple addresses to be recognized.
0	GC0	**General Call Address Enable.** When hardware address recognition is enabled (EHACK0 = 1), this bit will determine whether the General Call Address (0x00) is also recognized by hardware. 0: General Call Address is ignored. 1: General Call Address is recognized.

SFR Definition 21.7. SMB0ADM: SMBus0 Slave Address Mask

Bit	7	6	5	4	3	2	1	0
Name	SLVM0[6:0]							EHACK0
Type	R/W							R/W
Reset	1	1	1	1	1	1	1	0

SFR Address = 0xCE; SFR Page = 0

Bit	Name	Function
7:1	SLVM0[6:0]	**SMBus0 Slave Address Mask.** Defines which bits of register SMB0ADR are compared with an incoming address byte, and which bits are ignored. Any bit set to 1 in SLVM0[6:0] enables comparisons with the corresponding bit in SLV0[6:0]. Bits set to 0 are ignored (can be either 0 or 1 in the incoming address).
0	EHACK0	**Hardware Acknowledge Enable.** Enables hardware acknowledgement of slave address and received data bytes. 0: Firmware must manually acknowledge all incoming address and data bytes. 1: Automatic Slave Address Recognition and Hardware Acknowledge is Enabled.

SFR Definition 21.8. SMB1ADR: SMBus1 Slave Address

Bit	7	6	5	4	3	2	1	0
Name	SLV1[6:0]							GC1
Type	R/W							R/W
Reset	0	0	0	0	0	0	0	0

SFR Address = 0xCF; SFR Page = F

Bit	Name	Function
7:1	SLV1[6:0]	**SMBus1 Hardware Slave Address.** Defines the SMBus1 Slave Address(es) for automatic hardware acknowledgment. Only address bits which have a 1 in the corresponding bit position in SLVM1[6:0] are checked against the incoming address. This allows multiple addresses to be recognized.
0	GC1	**General Call Address Enable.** When hardware address recognition is enabled (EHACK1 = 1), this bit will determine whether the General Call Address (0x00) is also recognized by hardware. 0: General Call Address is ignored. 1: General Call Address is recognized.

SFR Definition 21.9. SMB1ADM: SMBus1 Slave Address Mask

Bit	7	6	5	4	3	2	1	0
Name	SLVM1[6:0]							EHACK1
Type	R/W							R/W
Reset	1	1	1	1	1	1	1	0

SFR Address = 0xCE; SFR Page = F

Bit	Name	Function
7:1	SLVM1[6:0]	**SMBus1 Slave Address Mask.** Defines which bits of register SMB1ADR are compared with an incoming address byte, and which bits are ignored. Any bit set to 1 in SLVM1[6:0] enables comparisons with the corresponding bit in SLV1[6:0]. Bits set to 0 are ignored (can be either 0 or 1 in the incoming address).
0	EHACK1	**Hardware Acknowledge Enable.** Enables hardware acknowledgement of slave address and received data bytes. 0: Firmware must manually acknowledge all incoming address and data bytes. 1: Automatic Slave Address Recognition and Hardware Acknowledge is Enabled.

21.4.5. Data Register

The SMBus Data register SMBnDAT holds a byte of serial data to be transmitted or one that has just been received. Software may safely read or write to the data register when the SIn flag is set. Software should not attempt to access the SMBnDAT register when the SMBus is enabled and the SIn flag is cleared to logic 0, as the interface may be in the process of shifting a byte of data into or out of the register.

Data in SMBnDAT is always shifted out MSB first. After a byte has been received, the first bit of received data is located at the MSB of SMBnDAT. While data is being shifted out, data on the bus is simultaneously being shifted in. SMBnDAT always contains the last data byte present on the bus. In the event of lost arbitration, the transition from master transmitter to slave receiver is made with the correct data or address in SMBnDAT.

SFR Definition 21.10. SMB0DAT: SMBus Data

Bit	7	6	5	4	3	2	1	0
Name	SMB0DAT[7:0]							
Type	R/W							
Reset	0	0	0	0	0	0	0	0

SFR Address = 0xC2; SFR Page = 0

Bit	Name	Function
7:0	SMB0DAT[7:0]	**SMBus0 Data.** The SMB0DAT register contains a byte of data to be transmitted on the SMBus0 serial interface or a byte that has just been received on the SMBus0 serial interface. The CPU can read from or write to this register whenever the SI0 serial interrupt flag (SMB0CN.0) is set to logic 1. The serial data in the register remains stable as long as the SI0 flag is set. When the SI0 flag is not set, the system may be in the process of shifting data in/out and the CPU should not attempt to access this register.

SFR Definition 21.11. SMB1DAT: SMBus Data

Bit	7	6	5	4	3	2	1	0
Name	SMB1DAT[7:0]							
Type	R/W							
Reset	0	0	0	0	0	0	0	0

SFR Address = 0xC2; SFR Page = F

Bit	Name	Function
7:0	SMB1DAT[7:0]	**SMBus1 Data.** The SMB1DAT register contains a byte of data to be transmitted on the SMBus1 serial interface or a byte that has just been received on the SMBus1 serial interface. The CPU can read from or write to this register whenever the SI1 serial interrupt flag (SMB1CN.0) is set to logic 1. The serial data in the register remains stable as long as the SI1 flag is set. When the SI1 flag is not set, the system may be in the process of shifting data in/out and the CPU should not attempt to access this register.

21.5. SMBus Transfer Modes

The SMBus interface may be configured to operate as master and/or slave. At any particular time, it will be operating in one of the following four modes: Master Transmitter, Master Receiver, Slave Transmitter, or Slave Receiver. The SMBus interface enters Master Mode any time a START is generated, and remains in Master Mode until it loses an arbitration or generates a STOP. An SMBus interrupt is generated at the end of all SMBus byte frames. The position of the ACK interrupt when operating as a receiver depends on whether hardware ACK generation is enabled. As a receiver, the interrupt for an ACK occurs **before** the ACK with hardware ACK generation disabled, and **after** the ACK when hardware ACK generation is enabled. As a transmitter, interrupts occur **after** the ACK, regardless of whether hardware ACK generation is enabled or not.

21.5.1. Write Sequence (Master)

During a write sequence, an SMBus master writes data to a slave device. The master in this transfer will be a transmitter during the address byte, and a transmitter during all data bytes. The SMBus interface generates the START condition and transmits the first byte containing the address of the target slave and the data direction bit. In this case the data direction bit (R/W) will be logic 0 (WRITE). The master then transmits one or more bytes of serial data. After each byte is transmitted, an acknowledge bit is generated by the slave. The transfer is ended when the STO bit is set and a STOP is generated. The interface will switch to Master Receiver Mode if SMB0DAT is not written following a Master Transmitter interrupt. Figure 21.5 shows a typical master write sequence. Two transmit data bytes are shown, though any number of bytes may be transmitted. Notice that all of the “data byte transferred” interrupts occur **after** the ACK cycle in this mode, regardless of whether hardware ACK generation is enabled.

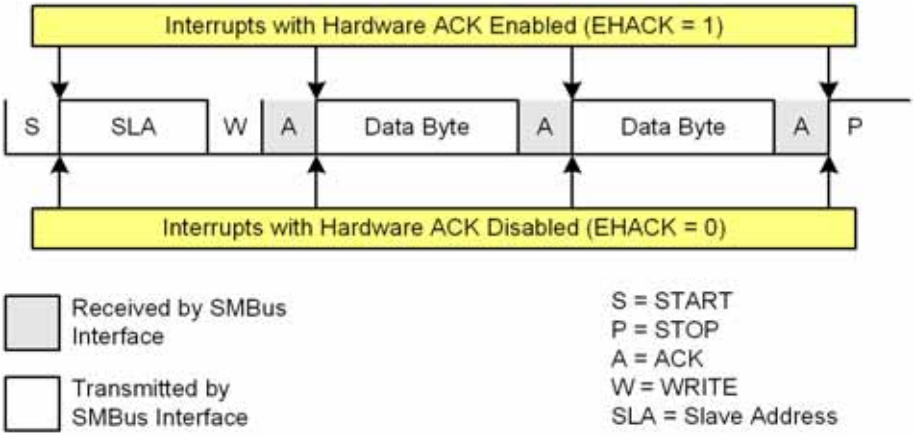

Figure 21.5. Typical Master Write Sequence

21.5.2. Read Sequence (Master)

During a read sequence, an SMBus master reads data from a slave device. The master in this transfer will be a transmitter during the address byte, and a receiver during all data bytes. The SMBus interface generates the START condition and transmits the first byte containing the address of the target slave and the data direction bit. In this case the data direction bit (R/W) will be logic 1 (READ). Serial data is then received from the slave on SDA while the SMBus outputs the serial clock. The slave transmits one or more bytes of serial data.

If hardware ACK generation is disabled, the ACKRQ is set to 1 and an interrupt is generated after each received byte. Software must write the ACK bit at that time to ACK or NACK the received byte.

With hardware ACK generation enabled, the SMBus hardware will automatically generate the ACK/NACK, and then post the interrupt. **It is important to note that the appropriate ACK or NACK value should be set up by the software prior to receiving the byte when hardware ACK generation is enabled.**

Writing a 1 to the ACK bit generates an ACK; writing a 0 generates a NACK. Software should write a 0 to the ACK bit for the last data transfer, to transmit a NACK. The interface exits Master Receiver Mode after the STO bit is set and a STOP is generated. The interface will switch to Master Transmitter Mode if SMB0-DAT is written while an active Master Receiver. Figure 21.6 shows a typical master read sequence. Two received data bytes are shown, though any number of bytes may be received. Notice that the ‘data byte transferred’ interrupts occur at different places in the sequence, depending on whether hardware ACK generation is enabled. The interrupt occurs **before** the ACK with hardware ACK generation disabled, and **after** the ACK when hardware ACK generation is enabled.

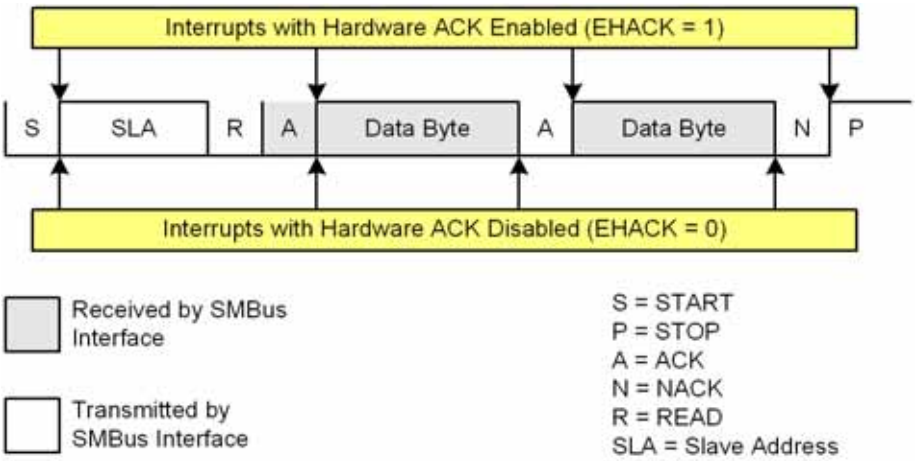

Figure 21.6. Typical Master Read Sequence

21.5.3. Write Sequence (Slave)

During a write sequence, an SMBus master writes data to a slave device. The slave in this transfer will be a receiver during the address byte, and a receiver during all data bytes. When slave events are enabled (INH = 0), the interface enters Slave Receiver Mode when a START followed by a slave address and direction bit (WRITE in this case) is received. If hardware ACK generation is disabled, upon entering Slave Receiver Mode, an interrupt is generated and the ACKRQ bit is set. The software must respond to the received slave address with an ACK, or ignore the received slave address with a NACK. If hardware ACK generation is enabled, the hardware will apply the ACK for a slave address which matches the criteria set up by SMB0ADR and SMB0ADM. The interrupt will occur after the ACK cycle.

If the received slave address is ignored (by software or hardware), slave interrupts will be inhibited until the next START is detected. If the received slave address is acknowledged, zero or more data bytes are received.

If hardware ACK generation is disabled, the ACKRQ is set to 1 and an interrupt is generated after each received byte. Software must write the ACK bit at that time to ACK or NACK the received byte.

With hardware ACK generation enabled, the SMBus hardware will automatically generate the ACK/NACK, and then post the interrupt. **It is important to note that the appropriate ACK or NACK value should be set up by the software prior to receiving the byte when hardware ACK generation is enabled.**

The interface exits Slave Receiver Mode after receiving a STOP. The interface will switch to Slave Transmitter Mode if SMB0DAT is written while an active Slave Receiver. Figure 21.7 shows a typical slave write sequence. Two received data bytes are shown, though any number of bytes may be received. Notice that the ‘data byte transferred’ interrupts occur at different places in the sequence, depending on whether hardware ACK generation is enabled. The interrupt occurs **before** the ACK with hardware ACK generation disabled, and **after** the ACK when hardware ACK generation is enabled.

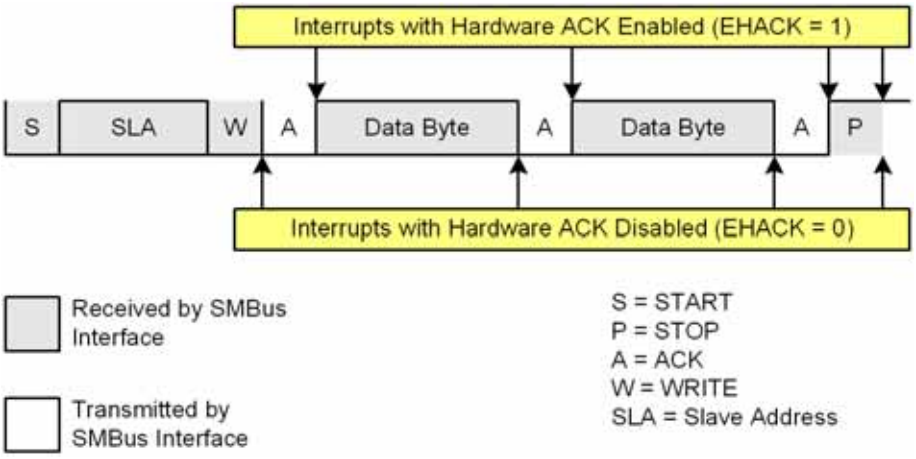

Figure 21.7. Typical Slave Write Sequence

21.5.4. Read Sequence (Slave)

During a read sequence, an SMBus master reads data from a slave device. The slave in this transfer will be a receiver during the address byte, and a transmitter during all data bytes. When slave events are enabled (INH = 0), the interface enters Slave Receiver Mode (to receive the slave address) when a START followed by a slave address and direction bit (READ in this case) is received. If hardware ACK generation is disabled, upon entering Slave Receiver Mode, an interrupt is generated and the ACKRQ bit is set. The software must respond to the received slave address with an ACK, or ignore the received slave address with a NACK. If hardware ACK generation is enabled, the hardware will apply the ACK for a slave address which matches the criteria set up by SMB0ADR and SMB0ADM. The interrupt will occur after the ACK cycle.

If the received slave address is ignored (by software or hardware), slave interrupts will be inhibited until the next START is detected. If the received slave address is acknowledged, zero or more data bytes are transmitted. If the received slave address is acknowledged, data should be written to SMB0DAT to be transmitted. The interface enters slave transmitter mode, and transmits one or more bytes of data. After each byte is transmitted, the master sends an acknowledge bit; if the acknowledge bit is an ACK, SMB0DAT should be written with the next data byte. If the acknowledge bit is a NACK, SMB0DAT should not be written to before SI is cleared (an error condition may be generated if SMB0DAT is written following a received NACK while in slave transmitter mode). The interface exits slave transmitter mode after receiving a STOP. The interface will switch to slave receiver mode if SMB0DAT is not written following a Slave Transmitter interrupt. Figure 21.8 shows a typical slave read sequence. Two transmitted data bytes are shown, though any number of bytes may be transmitted. Notice that all of the “data byte transferred” interrupts occur **after** the ACK cycle in this mode, regardless of whether hardware ACK generation is enabled.

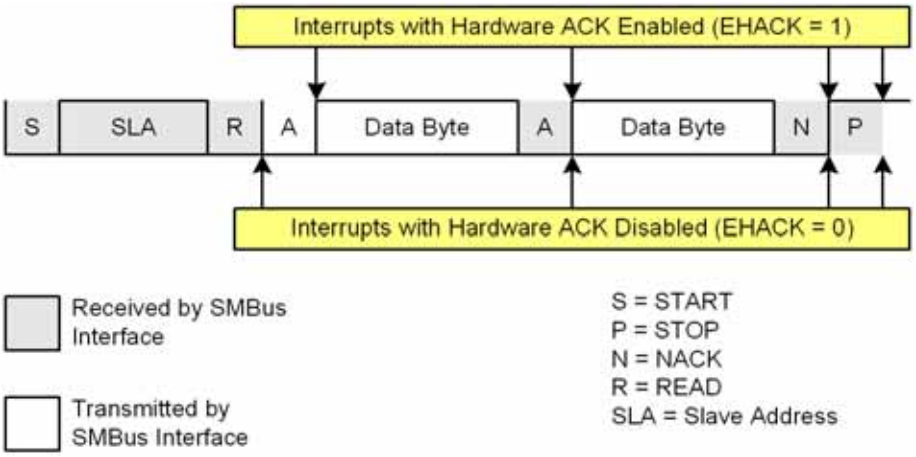

Figure 21.8. Typical Slave Read Sequence

21.6. SMBus Status Decoding

The current SMBus status can be easily decoded using the SMB0CN register. The appropriate actions to take in response to an SMBus event depend on whether hardware slave address recognition and ACK generation is enabled or disabled. Table 21.5 describes the typical actions when hardware slave address recognition and ACK generation is disabled. Table 21.6 describes the typical actions when hardware slave address recognition and ACK generation is enabled. In the tables, STATUS VECTOR refers to the four upper bits of SMB0CN: MASTER, TXMODE, STA, and STO. The shown response options are only the typical responses; application-specific procedures are allowed as long as they conform to the SMBus specification. Highlighted responses are allowed by hardware but do not conform to the SMBus specification.

Table 21.5. SMBus Status Decoding: Hardware ACK Disabled (EHACK = 0)

Mode	Values Read				Current SMbus State	Typical Response Options	Values to Write			Next Status Vector Expected
	Status Vector	ACKRQ	ARBLOST	ACK			STA	STO	ACK	
Master Transmitter	1110	0	0	X	A master START was generated.	Load slave address + R/W into SMB0DAT.	0	0	X	1100
	1100	0	0	0	A master data or address byte was transmitted; NACK received.	Set STA to restart transfer.	1	0	X	1110
						Abort transfer.	0	1	X	—
		0	0	1	A master data or address byte was transmitted; ACK received.	Load next data byte into SMB0-DAT.	0	0	X	1100
						End transfer with STOP.	0	1	X	—
						End transfer with STOP and start another transfer.	1	1	X	—
						Send repeated START.	1	0	X	1110
						Switch to Master Receiver Mode (clear SI without writing new data to SMB0DAT).	0	0	X	1000
Master Receiver	1000	1	0	X	A master data byte was received; ACK requested.	Acknowledge received byte; Read SMB0DAT.	0	0	1	1000
						Send NACK to indicate last byte, and send STOP.	0	1	0	—
						Send NACK to indicate last byte, and send STOP followed by START.	1	1	0	1110
						Send ACK followed by repeated START.	1	0	1	1110
						Send NACK to indicate last byte, and send repeated START.	1	0	0	1110
						Send ACK and switch to Master Transmitter Mode (write to SMB0DAT before clearing SI).	0	0	1	1100
						Send NACK and switch to Master Transmitter Mode (write to SMB0DAT before clearing SI).	0	0	0	1100

Table 21.5. SMBus Status Decoding: Hardware ACK Disabled (EHACK = 0) (Continued)

Mode	Values Read				Current SMbus State	Typical Response Options	Values to Write			Next Status Vector Expected
	Status Vector	ACKRQ	ARBLOST	ACK			STA	STO	ACK	
Slave Transmitter	0100	0	0	0	A slave byte was transmitted; NACK received.	No action required (expecting STOP condition).	0	0	X	0001
		0	0	1	A slave byte was transmitted; ACK received.	Load SMB0DAT with next data byte to transmit.	0	0	X	0100
		0	1	X	A Slave byte was transmitted; error detected.	No action required (expecting Master to end transfer).	0	0	X	0001
	0101	0	X	X	An illegal STOP or bus error was detected while a Slave Transmission was in progress.	Clear STO.	0	0	X	—
Slave Receiver	0010	1	0	X	A slave address + R/W was received; ACK requested.	If Write, Acknowledge received address	0	0	1	0000
						If Read, Load SMB0DAT with data byte; ACK received address	0	0	1	0100
						NACK received address.	0	0	0	—
		1	1	X	Lost arbitration as master; slave address + R/W received; ACK requested.	If Write, Acknowledge received address	0	0	1	0000
						If Read, Load SMB0DAT with data byte; ACK received address	0	0	1	0100
						NACK received address.	0	0	0	—
						Reschedule failed transfer; NACK received address.	1	0	0	1110
	0001	0	0	X	A STOP was detected while addressed as a Slave Transmitter or Slave Receiver.	Clear STO.	0	0	X	—
		1	1	X	Lost arbitration while attempting a STOP.	No action required (transfer complete/aborted).	0	0	0	—
	0000	1	0	X	A slave byte was received; ACK requested.	Acknowledge received byte; Read SMB0DAT.	0	0	1	0000
						NACK received byte.	0	0	0	—

Table 21.5. SMBus Status Decoding: Hardware ACK Disabled (EHACK = 0) (Continued)

Mode	Values Read				Current SMbus State	Typical Response Options	Values to Write			Next Status Vector Expected
	Status Vector	ACKRQ	ARBLOST	ACK			STA	STO	ACK	
Bus Error Condition	0010	0	1	X	Lost arbitration while attempting a repeated START.	Abort failed transfer.	0	0	X	—
						Reschedule failed transfer.	1	0	X	1110
	0001	0	1	X	Lost arbitration due to a detected STOP.	Abort failed transfer.	0	0	X	—
						Reschedule failed transfer.	1	0	X	1110
	0000	1	1	X	Lost arbitration while transmitting a data byte as master.	Abort failed transfer.	0	0	0	—
						Reschedule failed transfer.	1	0	0	1110

Table 21.6. SMBus Status Decoding: Hardware ACK Enabled (EHACK = 1)

Mode	Values Read				Current SMbus State	Typical Response Options	Values to Write			Next Status Vector Expected
	Status Vector	ACKRQ	ARBLOST	ACK			STA	STO	ACK	
Master Transmitter	1110	0	0	X	A master START was generated.	Load slave address + R/W into SMB0DAT.	0	0	X	1100
	1100	0	0	0	A master data or address byte was transmitted; NACK received.	Set STA to restart transfer.	1	0	X	1110
						Abort transfer.	0	1	X	—
		0	0	1	A master data or address byte was transmitted; ACK received.	Load next data byte into SMB0DAT.	0	0	X	1100
						End transfer with STOP.	0	1	X	—
						End transfer with STOP and start another transfer.	1	1	X	—
						Send repeated START.	1	0	X	1110
						Switch to Master Receiver Mode (clear SI without writing new data to SMB0DAT). Set ACK for initial data byte.	0	0	1	1000

Table 21.6. SMBus Status Decoding: Hardware ACK Enabled (EHACK = 1) (Continued)

Mode	Values Read				Current SMbus State	Typical Response Options	Values to Write			Next Status Vector Expected
	Status Vector	ACKRQ	ARBLOST	ACK			STA	STO	ACK	
Master Receiver	1000	0	0	1	A master data byte was received; ACK sent.	Set ACK for next data byte; Read SMB0DAT.	0	0	1	1000
						Set NACK to indicate next data byte as the last data byte; Read SMB0DAT.	0	0	0	1000
						Initiate repeated START.	1	0	0	1110
						Switch to Master Transmitter Mode (write to SMB0DAT before clearing SI).	0	0	X	1100
		0	0	0	A master data byte was received; NACK sent (last byte).	Read SMB0DAT; send STOP.	0	1	0	—
						Read SMB0DAT; Send STOP followed by START.	1	1	0	1110
						Initiate repeated START.	1	0	0	1110
						Switch to Master Transmitter Mode (write to SMB0DAT before clearing SI).	0	0	X	1100
Slave Transmitter	0100	0	0	0	A slave byte was transmitted; NACK received.	No action required (expecting STOP condition).	0	0	X	0001
		0	0	1	A slave byte was transmitted; ACK received.	Load SMB0DAT with next data byte to transmit.	0	0	X	0100
		0	1	X	A Slave byte was transmitted; error detected.	No action required (expecting Master to end transfer).	0	0	X	0001
	0101	0	X	X	An illegal STOP or bus error was detected while a Slave Transmission was in progress.	Clear STO.	0	0	X	—

Table 21.6. SMBus Status Decoding: Hardware ACK Enabled (EHACK = 1) (Continued)

Mode	Values Read				Current SMbus State	Typical Response Options	Values to Write			Next Status Vector Expected
	Status Vector	ACKRQ	ARBLOST	ACK			STA	STO	ACK	
Slave Receiver	0010	0	0	X	A slave address + R/W was received; ACK sent.	If Write, Set ACK for first data byte.	0	0	1	0000
						If Read, Load SMB0DAT with data byte	0	0	X	0100
		0	1	X	Lost arbitration as master; slave address + R/W received; ACK sent.	If Write, Set ACK for first data byte.	0	0	1	0000
						If Read, Load SMB0DAT with data byte	0	0	X	0100
						Reschedule failed transfer	1	0	X	1110
	0001	0	0	X	A STOP was detected while addressed as a Slave Transmitter or Slave Receiver.	Clear STO.	0	0	X	—
		0	1	X	Lost arbitration while attempting a STOP.	No action required (transfer complete/aborted).	0	0	0	—
	0000	0	0	X	A slave byte was received.	Set ACK for next data byte; Read SMB0DAT.	0	0	1	0000
						Set NACK for next data byte; Read SMB0DAT.	0	0	0	0000
Bus Error Condition	0010	0	1	X	Lost arbitration while attempting a repeated START.	Abort failed transfer.	0	0	X	—
						Reschedule failed transfer.	1	0	X	1110
	0001	0	1	X	Lost arbitration due to a detected STOP.	Abort failed transfer.	0	0	X	—
						Reschedule failed transfer.	1	0	X	1110
	0000	0	1	X	Lost arbitration while transmitting a data byte as master.	Abort failed transfer.	0	0	X	—
						Reschedule failed transfer.	1	0	X	1110

22. UART0

UART0 is an asynchronous, full duplex serial port offering modes 1 and 3 of the standard 8051 UART. Enhanced baud rate support allows a wide range of clock sources to generate standard baud rates (details in Section “22.1. Enhanced Baud Rate Generation” on page 194). Received data buffering allows UART0 to start reception of a second incoming data byte before software has finished reading the previous data byte.

UART0 has two associated SFRs: Serial Control Register 0 (SCON0) and Serial Data Buffer 0 (SBUF0). The single SBUF0 location provides access to both transmit and receive registers. **Writes to SBUF0 always access the Transmit register. Reads of SBUF0 always access the buffered Receive register; it is not possible to read data from the Transmit register.**

With UART0 interrupts enabled, an interrupt is generated each time a transmit is completed (TI0 is set in SCON0), or a data byte has been received (RI0 is set in SCON0). The UART0 interrupt flags are not cleared by hardware when the CPU vectors to the interrupt service routine. They must be cleared manually by software, allowing software to determine the cause of the UART0 interrupt (transmit complete or receive complete).

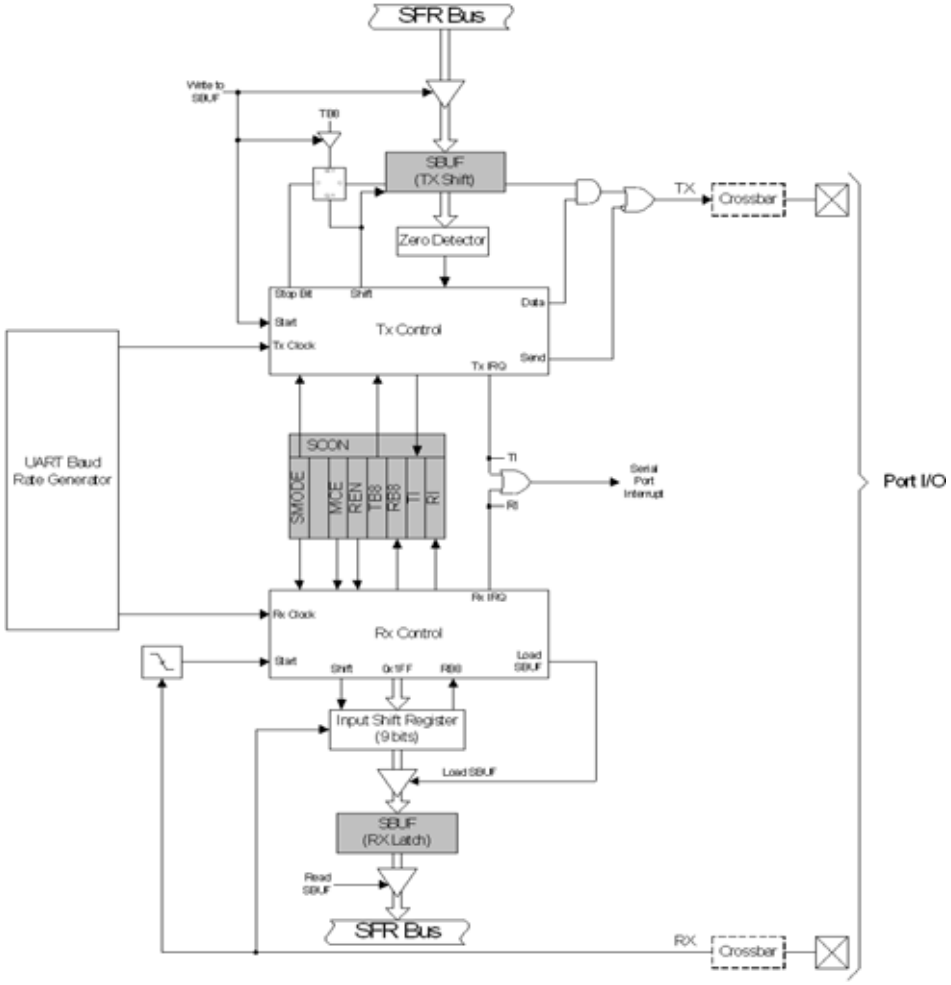

Figure 22.1. UART0 Block Diagram

22.1. Enhanced Baud Rate Generation

The UART0 baud rate is generated by Timer 1 in 8-bit auto-reload mode. The TX clock is generated by TL1; the RX clock is generated by a copy of TL1 (shown as RX Timer in Figure 22.2), which is not user-accessible. Both TX and RX Timer overflows are divided by two to generate the TX and RX baud rates. The RX Timer runs when Timer 1 is enabled, and uses the same reload value (TH1). However, an RX Timer reload is forced when a START condition is detected on the RX pin. This allows a receive to begin any time a START is detected, independent of the TX Timer state.

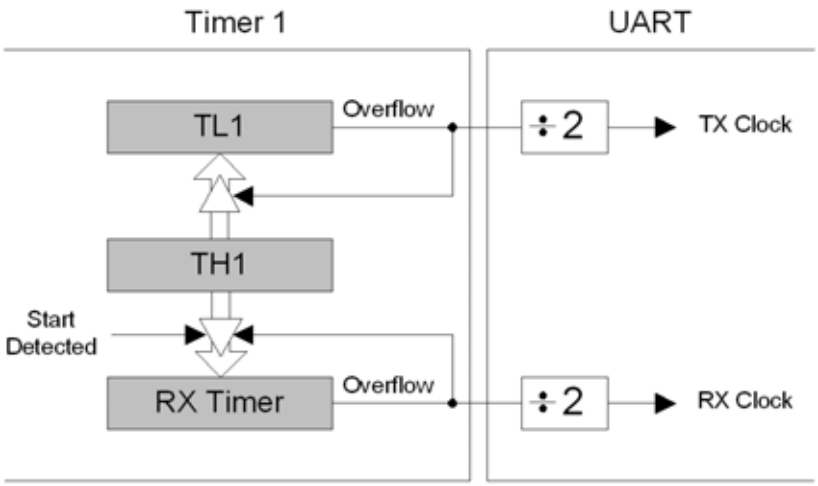

Figure 22.2. UART0 Baud Rate Logic

Timer 1 should be configured for Mode 2, 8-bit auto-reload (see Section "25.1.3. Mode 2: 8-bit Counter/Timer with Auto-Reload" on page 228). The Timer 1 reload value should be set so that overflows will occur at two times the desired UART baud rate frequency. Note that Timer 1 may be clocked by one of six sources: SYSCLK, SYSCLK/4, SYSCLK/12, SYSCLK/48, the external oscillator clock/8, or an external input T1. For any given Timer 1 clock source, the UART0 baud rate is determined by Equation 22.1-A and Equation 22.1-B.

A) $$\text{UARTBaudRate} = \frac{1}{2} \times \text{T1_Overflow_Rate}$$

B) $$\text{T1_Overflow_Rate} = \frac{T1_{CLK}}{256 - \text{TH1}}$$

Equation 22.1. UART0 Baud Rate

Where $T1_{CLK}$ is the frequency of the clock supplied to Timer 1, and *T1H* is the high byte of Timer 1 (reload value). Timer 1 clock frequency is selected as described in Section "25. Timers" on page 224. A quick reference for typical baud rates and system clock frequencies is given in Table 22.1. The internal oscillator may still generate the system clock when the external oscillator is driving Timer 1.

22.2. Operational Modes

UART0 provides standard asynchronous, full duplex communication. The UART mode (8-bit or 9-bit) is selected by the S0MODE bit (SCON0.7). Typical UART connection options are shown in Figure 22.3.

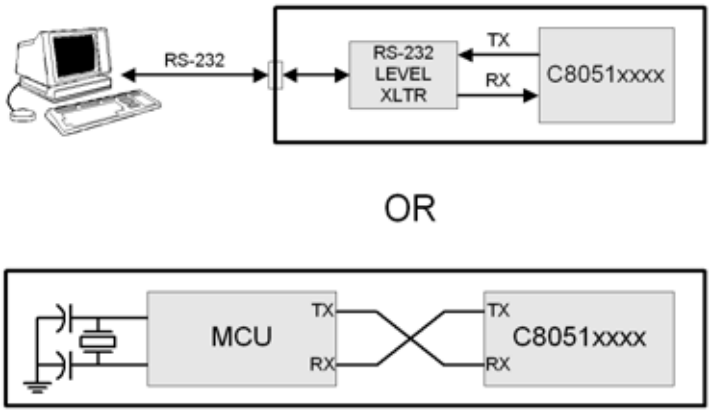

Figure 22.3. UART Interconnect Diagram

22.2.1. 8-Bit UART

8-Bit UART mode uses a total of 10 bits per data byte: one start bit, eight data bits (LSB first), and one stop bit. Data are transmitted LSB first from the TX0 pin and received at the RX0 pin. On receive, the eight data bits are stored in SBUF0 and the stop bit goes into RB80 (SCON0.2).

Data transmission begins when software writes a data byte to the SBUF0 register. The TI0 Transmit Interrupt Flag (SCON0.1) is set at the end of the transmission (the beginning of the stop-bit time). Data reception can begin any time after the REN0 Receive Enable bit (SCON0.4) is set to logic 1. After the stop bit is received, the data byte will be loaded into the SBUF0 receive register if the following conditions are met: RI0 must be logic 0, and if MCE0 is logic 1, the stop bit must be logic 1. In the event of a receive data overrun, the first received 8 bits are latched into the SBUF0 receive register and the following overrun data bits are lost.

If these conditions are met, the eight bits of data is stored in SBUF0, the stop bit is stored in RB80 and the RI0 flag is set. If these conditions are not met, SBUF0 and RB80 will not be loaded and the RI0 flag will not be set. An interrupt will occur if enabled when either TI0 or RI0 is set.

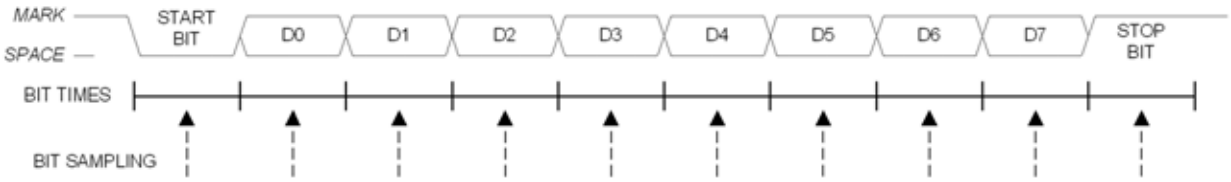

Figure 22.4. 8-Bit UART Timing Diagram

22.2.2. 9-Bit UART

9-bit UART mode uses a total of eleven bits per data byte: a start bit, 8 data bits (LSB first), a programmable ninth data bit, and a stop bit. The state of the ninth transmit data bit is determined by the value in TB80 (SCON0.3), which is assigned by user software. It can be assigned the value of the parity flag (bit P in register PSW) for error detection, or used in multiprocessor communications. On receive, the ninth data bit goes into RB80 (SCON0.2) and the stop bit is ignored.

Data transmission begins when an instruction writes a data byte to the SBUF0 register. The TI0 Transmit Interrupt Flag (SCON0.1) is set at the end of the transmission (the beginning of the stop-bit time). Data reception can begin any time after the REN0 Receive Enable bit (SCON0.4) is set to 1. After the stop bit is received, the data byte will be loaded into the SBUF0 receive register if the following conditions are met: (1) RI0 must be logic 0, and (2) if MCE0 is logic 1, the 9th bit must be logic 1 (when MCE0 is logic 0, the state of the ninth data bit is unimportant). If these conditions are met, the eight bits of data are stored in SBUF0, the ninth bit is stored in RB80, and the RI0 flag is set to 1. If the above conditions are not met, SBUF0 and RB80 will not be loaded and the RI0 flag will not be set to 1. A UART0 interrupt will occur if enabled when either TI0 or RI0 is set to 1.

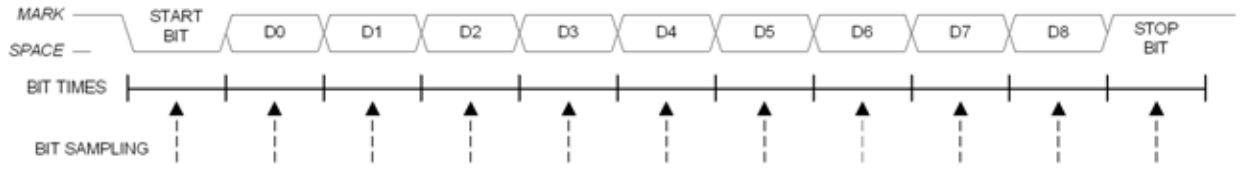

Figure 22.5. 9-Bit UART Timing Diagram

22.3. Multiprocessor Communications

9-Bit UART mode supports multiprocessor communication between a master processor and one or more slave processors by special use of the ninth data bit. When a master processor wants to transmit to one or more slaves, it first sends an address byte to select the target(s). An address byte differs from a data byte in that its ninth bit is logic 1; in a data byte, the ninth bit is always set to logic 0.

Setting the MCE0 bit (SCON0.5) of a slave processor configures its UART such that when a stop bit is received, the UART will generate an interrupt only if the ninth bit is logic 1 (RB80 = 1) signifying an address byte has been received. In the UART interrupt handler, software will compare the received address with the slave's own assigned 8-bit address. If the addresses match, the slave will clear its MCE0 bit to enable interrupts on the reception of the following data byte(s). Slaves that weren't addressed leave their MCE0 bits set and do not generate interrupts on the reception of the following data bytes, thereby ignoring the data. Once the entire message is received, the addressed slave resets its MCE0 bit to ignore all transmissions until it receives the next address byte.

Multiple addresses can be assigned to a single slave and/or a single address can be assigned to multiple slaves, thereby enabling "broadcast" transmissions to more than one slave simultaneously. The master processor can be configured to receive all transmissions or a protocol can be implemented such that the master/slave role is temporarily reversed to enable half-duplex transmission between the original master and slave(s).

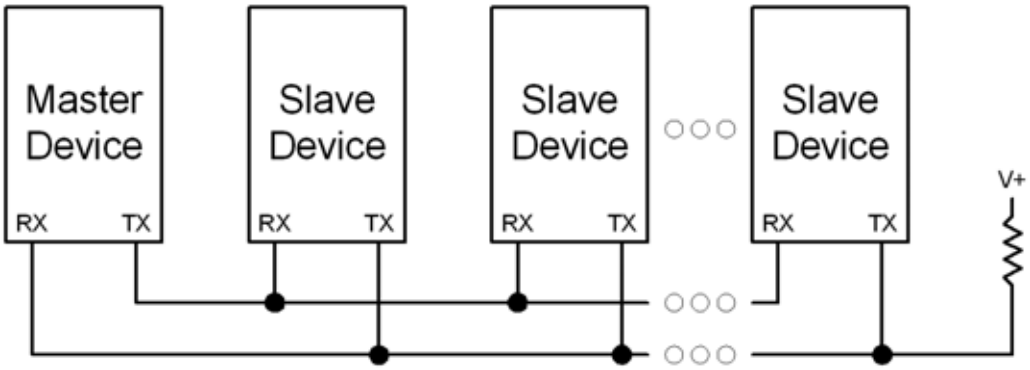

Figure 22.6. UART Multi-Processor Mode Interconnect Diagram

SFR Definition 22.1. SCON0: Serial Port 0 Control

Bit	7	6	5	4	3	2	1	0
Name	S0MODE	-	MCE0	REN0	TB80	RB80	TI0	RI0
Type	R/W	R	R/W	R/W	R/W	R/W	R/W	R/W
Reset	0	1	0	0	0	0	0	0

SFR Address = 0x98; SFR Page = All Pages; Bit-Addressable

Bit	Name	Function
7	S0MODE	**Serial Port 0 Operation Mode.** Selects the UART0 Operation Mode. 0: 8-bit UART with Variable Baud Rate. 1: 9-bit UART with Variable Baud Rate.
6	Unused	Read = 1b, Write = don't care.
5	MCE0	**Multiprocessor Communication Enable.** The function of this bit is dependent on the Serial Port 0 Operation Mode: **Mode 0: Checks for valid stop bit.** 0: Logic level of stop bit is ignored. 1: RI0 will only be activated if stop bit is logic level 1. **Mode 1: Multiprocessor Communications Enable.** 0: Logic level of ninth bit is ignored. 1: RI0 is set and an interrupt is generated only when the ninth bit is logic 1.
4	REN0	**Receive Enable.** 0: UART0 reception disabled. 1: UART0 reception enabled.
3	TB80	**Ninth Transmission Bit.** The logic level of this bit will be sent as the ninth transmission bit in 9-bit UART Mode (Mode 1). Unused in 8-bit mode (Mode 0).
2	RB80	**Ninth Receive Bit.** RB80 is assigned the value of the STOP bit in Mode 0; it is assigned the value of the 9th data bit in Mode 1.
1	TI0	**Transmit Interrupt Flag.** Set by hardware when a byte of data has been transmitted by UART0 (after the 8th bit in 8-bit UART Mode, or at the beginning of the STOP bit in 9-bit UART Mode). When the UART0 interrupt is enabled, setting this bit causes the CPU to vector to the UART0 interrupt service routine. This bit must be cleared manually by software.
0	RI0	**Receive Interrupt Flag.** Set to 1 by hardware when a byte of data has been received by UART0 (set at the STOP bit sampling time). When the UART0 interrupt is enabled, setting this bit to 1 causes the CPU to vector to the UART0 interrupt service routine. This bit must be cleared manually by software.

SFR Definition 22.2. SBUF0: Serial (UART0) Port Data Buffer

Bit	7	6	5	4	3	2	1	0
Name	SBUF0[7:0]							
Type	R/W							
Reset	0	0	0	0	0	0	0	0

SFR Address = 0x99; SFR Page = All Pages

Bit	Name	Function
7:0	SBUF0[7:0]	**Serial Data Buffer Bits 7–0 (MSB–LSB).** This SFR accesses two registers; a transmit shift register and a receive latch register. When data is written to SBUF0, it goes to the transmit shift register and is held for serial transmission. Writing a byte to SBUF0 initiates the transmission. A read of SBUF0 returns the contents of the receive latch.

Table 22.1. Timer Settings for Standard Baud Rates Using Internal Oscillator

	Target Baud Rate (bps)	Actual Baud Rate (bps)	Baud Rate Error	Oscillator Divide Factor	Timer Clock Source	SCA1-SCA0 (pre-scale select*	T1M	Timer 1 Reload Value (hex)
SYSCLK = 12 MHz	230400	230769	0.16%	52	SYSCLK	XX	1	0xE6
	115200	115385	0.16%	104	SYSCLK	XX	1	0xCC
	57600	57692	0.16%	208	SYSCLK	XX	1	0x98
	28800	28846	0.16%	416	SYSCLK	XX	1	0x30
	14400	14423	0.16%	832	SYSCLK / 4	01	0	0x98
	9600	9615	0.16%	1248	SYSCLK / 4	01	0	0x64
	2400	2404	0.16%	4992	SYSCLK / 12	00	0	0x30
	1200	1202	0.16%	9984	SYSCLK / 48	10	0	0x98
SYSCLK = 24 MHz	230400	230769	0.16%	104	SYSCLK	XX	1	0xCC
	115200	115385	0.16%	208	SYSCLK	XX	1	0x98
	57600	57692	0.16%	416	SYSCLK	XX	1	0x30
	28800	28846	0.16%	832	SYSCLK / 4	01	0	0x98
	14400	14423	0.16%	1664	SYSCLK / 4	01	0	0x30
	9600	9615	0.16%	2496	SYSCLK / 12	00	0	0x98
	2400	2404	0.16%	9984	SYSCLK / 48	10	0	0x98
	1200	1202	0.16%	19968	SYSCLK / 48	10	0	0x30
SYSCLK = 48 MHz	230400	230769	0.16%	208	SYSCLK	XX	1	0x98
	115200	115385	0.16%	416	SYSCLK	XX	1	0x30
	57600	57692	0.16%	832	SYSCLK / 4	01	0	0x98
	28800	28846	0.16%	1664	SYSCLK / 4	01	0	0x30
	14400	14388	0.08%	3336	SYSCLK / 12	00	0	0x75
	9600	9615	0.16%	4992	SYSCLK / 12	00	0	0x30
	2400	2404	0.16%	19968	SYSCLK / 48	10	0	0x30

Table 22.1. Timer Settings for Standard Baud Rates Using Internal Oscillator

Target Baud Rate (bps)	Actual Baud Rate (bps)	Baud Rate Error	Oscillator Divide Factor	Timer Clock Source	SCA1-SCA0 (pre-scale select*	T1M	Timer 1 Reload Value (hex)
Note: SCA1-SCA0 and T1M define the Timer Clock Source. X = Don't care							

23. UART1

UART1 is an asynchronous, full duplex serial port offering a variety of data formatting options. A dedicated baud rate generator with a 16-bit timer and selectable prescaler is included, which can generate a wide range of baud rates (details in Section “23.1. Baud Rate Generator” on page 202). A received data FIFO allows UART1 to receive up to three data bytes before data is lost and an overflow occurs.

UART1 has six associated SFRs. Three are used for the Baud Rate Generator (SBCON1, SBRLH1, and SBRLL1), two are used for data formatting, control, and status functions (SCON1, SMOD1), and one is used to send and receive data (SBUF1). The single SBUF1 location provides access to both the transmit holding register and the receive FIFO. **Writes to SBUF1 always access the Transmit Holding Register. Reads of SBUF1 always access the first byte of the Receive FIFO; it is not possible to read data from the Transmit Holding Register.**

With UART1 interrupts enabled, an interrupt is generated each time a transmit is completed (TI1 is set in SCON1), or a data byte has been received (RI1 is set in SCON1). The UART1 interrupt flags are not cleared by hardware when the CPU vectors to the interrupt service routine. They must be cleared manually by software, allowing software to determine the cause of the UART1 interrupt (transmit complete or receive complete). Note that if additional bytes are available in the Receive FIFO, the RI1 bit cannot be cleared by software.

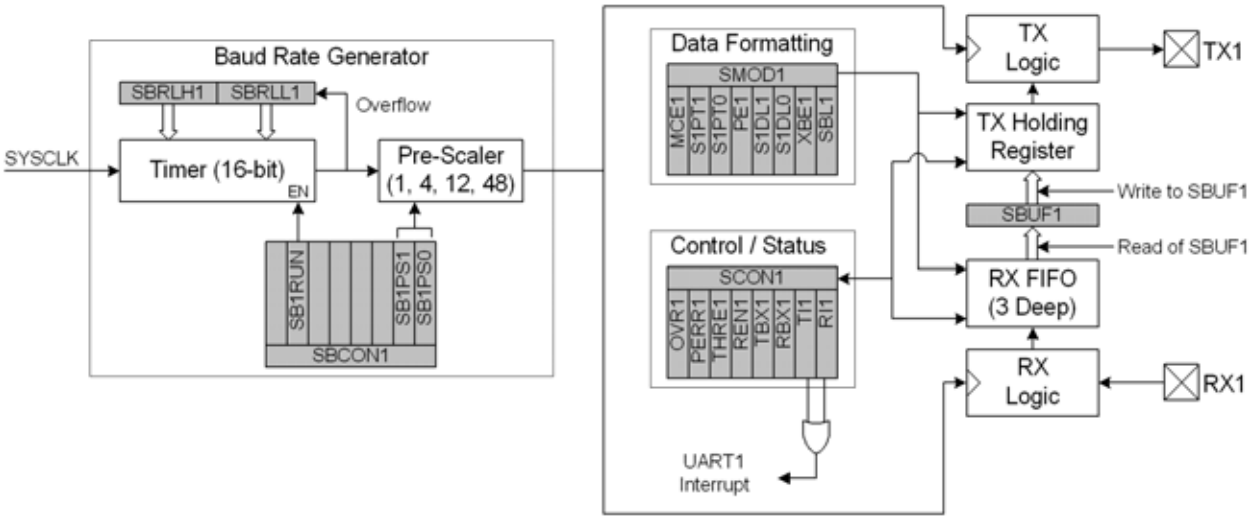

Figure 23.1. UART1 Block Diagram

23.1. Baud Rate Generator

The UART1 baud rate is generated by a dedicated 16-bit timer which runs from the controller's core clock (SYSCLK), and has prescaler options of 1, 4, 12, or 48. The timer and prescaler options combined allow for a wide selection of baud rates over many SYSCLK frequencies.

The baud rate generator is configured using three registers: SBCON1, SBRLH1, and SBRLL1. The UART1 Baud Rate Generator Control Register (SBCON1, SFR Definition) enables or disables the baud rate generator, and selects the prescaler value for the timer. The baud rate generator must be enabled for UART1 to function. Registers SBRLH1 and SBRLL1 contain a 16-bit reload value for the dedicated 16-bit timer. The internal timer counts up from the reload value on every clock tick. On timer overflows (0xFFFF to 0x0000), the timer is reloaded. For reliable UART operation, it is recommended that the UART baud rate is not configured for baud rates faster than SYSCLK/16. The baud rate for UART1 is defined in Equation 23.1.

$$\text{Baud Rate} = \frac{\text{SYSCLK}}{(65536 - (\text{SBRLH1:SBRLL1}))} \times \frac{1}{2} \times \frac{1}{\text{Prescaler}}$$

Equation 23.1. UART1 Baud Rate

A quick reference for typical baud rates and system clock frequencies is given in Table 23.1.

Table 23.1. Baud Rate Generator Settings for Standard Baud Rates

	Target Baud Rate (bps)	Actual Baud Rate (bps)	Baud Rate Error	Oscillator Divide Factor	SB1PS[1:0] (Prescaler Bits)	Reload Value in SBRLH1:SBRLL1
SYSCLK = 12 MHz	230400	230769	0.16%	52	11	0xFFE6
	115200	115385	0.16%	104	11	0xFFCC
	57600	57692	0.16%	208	11	0xFF98
	28800	28846	0.16%	416	11	0xFF30
	14400	14388	0.08%	834	11	0xFE5F
	9600	9600	0.0%	1250	11	0xFD8F
	2400	2400	0.0%	5000	11	0xF63C
	1200	1200	0.0%	10000	11	0xEC78
SYSCLK = 24 MHz	230400	230769	0.16%	104	11	0xFFCC
	115200	115385	0.16%	208	11	0xFF98
	57600	57692	0.16%	416	11	0xFF30
	28800	28777	0.08%	834	11	0xFE5F
	14400	14406	0.04%	1666	11	0xFCBF
	9600	9600	0.0%	2500	11	0xFB1E
	2400	2400	0.0%	10000	11	0xEC78
	1200	1200	0.0%	20000	11	0xD8F0
SYSCLK = 48 MHz	230400	230769	0.16%	208	11	0xFF98
	115200	115385	0.16%	416	11	0xFF30
	57600	57554	0.08%	834	11	0xFE5F
	28800	28812	0.04%	1666	11	0xFCBF
	14400	14397	0.02%	3334	11	0xF97D
	9600	9600	0.0%	5000	11	0xF63C
	2400	2400	0.0%	20000	11	0xD8F0
	1200	1200	0.0%	40000	11	0xB1E0

23.2. Data Format

UART1 has a number of available options for data formatting. Data transfers begin with a start bit (logic low), followed by the data bits (sent LSB-first), a parity or extra bit (if selected), and end with one or two stop bits (logic high). The data length is variable between 5 and 8 bits. A parity bit can be appended to the data, and automatically generated and detected by hardware for even, odd, mark, or space parity. The stop bit length is selectable between short (1 bit time) and long (1.5 or 2 bit times), and a multi-processor communication mode is available for implementing networked UART buses. All of the data formatting options can be configured using the SMOD1 register, shown in SFR Definition . Figure 23.2 shows the timing for a UART1 transaction without parity or an extra bit enabled. Figure 23.3 shows the timing for a UART1 transaction with parity enabled (PE1 = 1). Figure 23.4 is an example of a UART1 transaction when the extra bit is enabled (XBE1 = 1). Note that the extra bit feature is not available when parity is enabled, and the second stop bit is only an option for data lengths of 6, 7, or 8 bits.

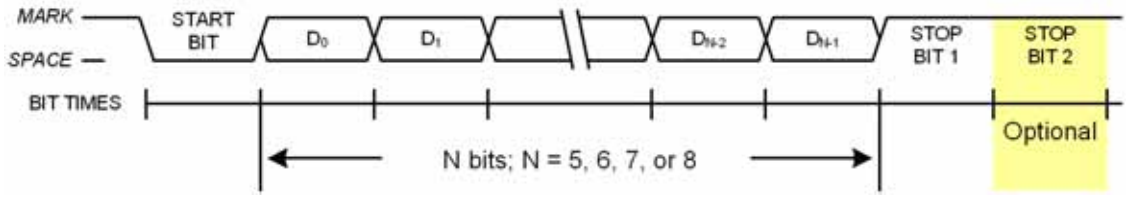

Figure 23.2. UART1 Timing Without Parity or Extra Bit

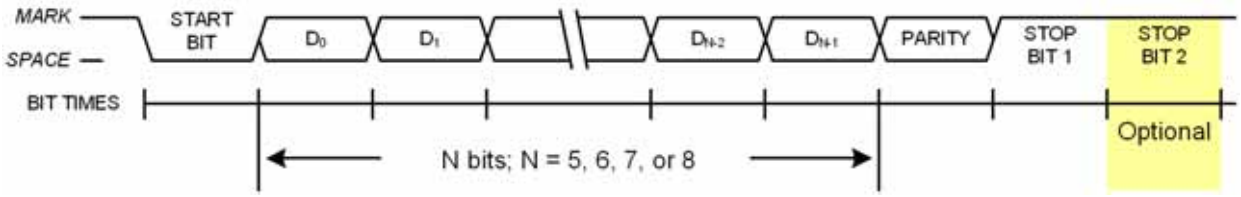

Figure 23.3. UART1 Timing With Parity

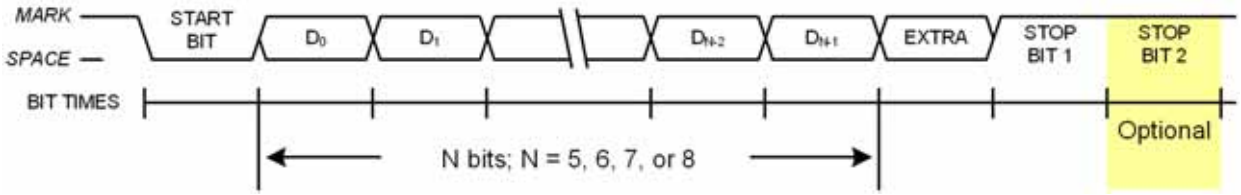

Figure 23.4. UART1 Timing With Extra Bit

23.3. Configuration and Operation

UART1 provides standard asynchronous, full duplex communication. It can operate in a point-to-point serial communications application, or as a node on a multi-processor serial interface. To operate in a point-to-point application, where there are only two devices on the serial bus, the MCE1 bit in SMOD1 should be cleared to 0. For operation as part of a multi-processor communications bus, the MCE1 and XBE1 bits should both be set to 1. In both types of applications, data is transmitted from the microcontroller on the TX1 pin, and received on the RX1 pin. The TX1 and RX1 pins are configured using the crossbar and the Port I/O registers, as detailed in Section “20. Port Input/Output” on page 147.

In typical UART communications, The transmit (TX) output of one device is connected to the receive (RX) input of the other device, either directly or through a bus transceiver, as shown in Figure 23.5.

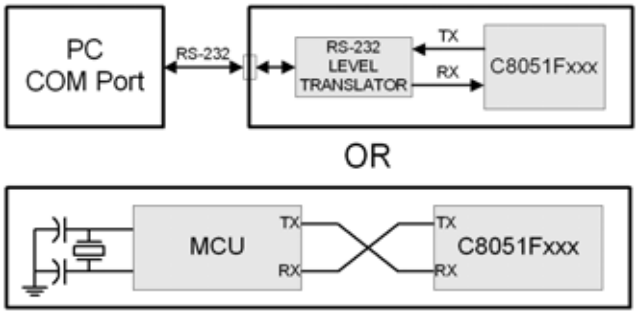

Figure 23.5. Typical UART Interconnect Diagram

23.3.1. Data Transmission

Data transmission is double-buffered, and begins when software writes a data byte to the SBUF1 register. Writing to SBUF1 places data in the Transmit Holding Register, and the Transmit Holding Register Empty flag (THRE1) will be cleared to 0. If the UARTs shift register is empty (i.e. no transmission is in progress) the data will be placed in the shift register, and the THRE1 bit will be set to 1. If a transmission is in progress, the data will remain in the Transmit Holding Register until the current transmission is complete. The TI1 Transmit Interrupt Flag (SCON1.1) will be set at the end of any transmission (the beginning of the stop-bit time). If enabled, an interrupt will occur when TI1 is set.

If the extra bit function is enabled (XBE1 = 1) and the parity function is disabled (PE1 = 0), the value of the TBX1 (SCON1.3) bit will be sent in the extra bit position. When the parity function is enabled (PE1 = 1), hardware will generate the parity bit according to the selected parity type (selected with S1PT[1:0]), and append it to the data field. Note: when parity is enabled, the extra bit function is not available.

23.3.2. Data Reception

Data reception can begin any time after the REN1 Receive Enable bit (SCON1.4) is set to logic 1. After the stop bit is received, the data byte will be stored in the receive FIFO if the following conditions are met: the receive FIFO (3 bytes deep) must not be full, and the stop bit(s) must be logic 1. In the event that the receive FIFO is full, the incoming byte will be lost, and a Receive FIFO Overrun Error will be generated (OVR1 in register SCON1 will be set to logic 1). If the stop bit(s) were logic 0, the incoming data will not be stored in the receive FIFO. If the reception conditions are met, the data is stored in the receive FIFO, and the RI1 flag will be set. Note: when MCE1 = 1, RI1 will only be set if the extra bit was equal to 1. Data can be read from the receive FIFO by reading the SBUF1 register. The SBUF1 register represents the oldest byte in the FIFO. After SBUF1 is read, the next byte in the FIFO is immediately loaded into SBUF1, and space is made available in the FIFO for another incoming byte. If enabled, an interrupt will occur when RI1 is set. RI1 can only be cleared to '0' by software when there is no more information in the FIFO. The recommended procedure to empty the FIFO contents is:

1. Clear RI1 to 0
2. Read SBUF1
3. Check RI1, and repeat at Step 1 if RI1 is set to 1.

If the extra bit function is enabled (XBE1 = 1) and the parity function is disabled (PE1 = 0), the extra bit for the oldest byte in the FIFO can be read from the RBX1 bit (SCON1.2). If the extra bit function is not enabled, the value of the stop bit for the oldest FIFO byte will be presented in RBX1. When the parity function is enabled (PE1 = 1), hardware will check the received parity bit against the selected parity type (selected with S1PT[1:0]) when receiving data. If a byte with parity error is received, the PERR1 flag will be set to 1. This flag must be cleared by software. Note: when parity is enabled, the extra bit function is not available.

23.3.3. Multiprocessor Communications

UART1 supports multiprocessor communication between a master processor and one or more slave processors by special use of the extra data bit. When a master processor wants to transmit to one or more slaves, it first sends an address byte to select the target(s). An address byte differs from a data byte in that its extra bit is logic 1; in a data byte, the extra bit is always set to logic 0.

Setting the MCE1 bit (SMOD1.7) of a slave processor configures its UART such that when a stop bit is received, the UART will generate an interrupt only if the extra bit is logic 1 (RBX1 = 1) signifying an address byte has been received. In the UART interrupt handler, software will compare the received address with the slave's own assigned address. If the addresses match, the slave will clear its MCE1 bit to enable interrupts on the reception of the following data byte(s). Slaves that weren't addressed leave their MCE1 bits set and do not generate interrupts on the reception of the following data bytes, thereby ignoring the data. Once the entire message is received, the addressed slave resets its MCE1 bit to ignore all transmissions until it receives the next address byte.

Multiple addresses can be assigned to a single slave and/or a single address can be assigned to multiple slaves, thereby enabling "broadcast" transmissions to more than one slave simultaneously. The master processor can be configured to receive all transmissions or a protocol can be implemented such that the master/slave role is temporarily reversed to enable half-duplex transmission between the original master and slave(s).

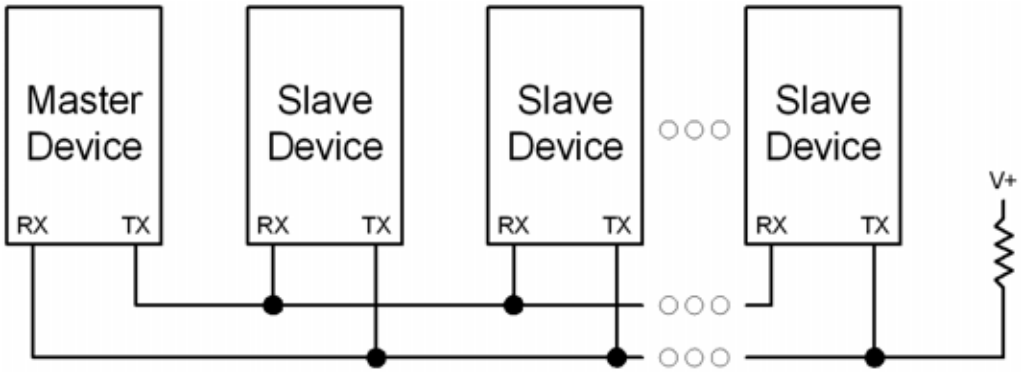

Figure 23.6. UART Multi-Processor Mode Interconnect Diagram

SFR Definition 23.1. SCON1: UART1 Control

Bit	7	6	5	4	3	2	1	0
Name	OVR1	PERR1	THRE1	REN1	TBX1	RBX1	TI1	RI1
Type	R/W	R/W	R	R/W	R/W	R/W	R/W	R/W
Reset	0	0	1	0	0	0	0	0

SFR Address = 0xD2; SFR Page = All Pages

Bit	Name	Function
7	OVR1	**Receive FIFO Overrun Flag.** This bit indicates a receive FIFO overrun condition, where an incoming character is discarded due to a full FIFO. This bit must be cleared to 0 by software. 0: Receive FIFO Overrun has not occurred. 1: Receive FIFO Overrun has occurred.
6	PERR1	**Parity Error Flag.** When parity is enabled, this bit indicates that a parity error has occurred. It is set to 1 when the parity of the oldest byte in the FIFO does not match the selected Parity Type. This bit must be cleared to 0 by software. 0: Parity Error has not occurred. 1: Parity Error has occurred.
5	THRE1	**Transmit Holding Register Empty Flag.** 0: Transmit Holding Register not Empty - do not write to SBUF1. 1: Transmit Holding Register Empty - it is safe to write to SBUF1.
4	REN1	**Receive Enable.** This bit enables/disables the UART receiver. When disabled, bytes can still be read from the receive FIFO. 0: UART1 reception disabled. 1: UART1 reception enabled.
3	TBX1	**Extra Transmission Bit.** The logic level of this bit will be assigned to the extra transmission bit when XBE1 = 1. This bit is not used when Parity is enabled.
2	RBX1	**Extra Receive Bit.** RBX1 is assigned the value of the extra bit when XBE1 = 1. If XBE1 is cleared to 0, RBX1 is assigned the logic level of the first stop bit. This bit is not valid when Parity is enabled.
1	TI1	**Transmit Interrupt Flag.** Set to a 1 by hardware after data has been transmitted at the beginning of the STOP bit. When the UART1 interrupt is enabled, setting this bit causes the CPU to vector to the UART1 interrupt service routine. This bit must be cleared manually by software.
0	RI1	**Receive Interrupt Flag.** Set to 1 by hardware when a byte of data has been received by UART1 (set at the STOP bit sampling time). When the UART1 interrupt is enabled, setting this bit to 1 causes the CPU to vector to the UART1 interrupt service routine. This bit must be cleared manually by software. Note that RI1 will remain set to '1' as long as there is still data in the UART FIFO. After the last byte has been shifted from the FIFO to SBUF1, RI1 can be cleared.

SFR Definition 23.2. SMOD1: UART1 Mode

Bit	7	6	5	4	3	2	1	0
Name	MCE1	S1PT[1:0]		PE1	S1DL[1:0]		XBE1	SBL1
Type	R/W	R/W		R/W	R/W		R/W	R/W
Reset	0	0	0	0	1	1	0	0

SFR Address = 0xE5; SFR Page = All Pages

Bit	Name	Function
7	MCE1	**Multiprocessor Communication Enable.** 0: RI will be activated if stop bit(s) are 1. 1: RI will be activated if stop bit(s) and extra bit are 1 (extra bit must be enabled using XBE1). Note: This function is not available when hardware parity is enabled.
6:5	S1PT[1:0]	**Parity Type Bits.** 00: Odd 01: Even 10: Mark 11: Space
4	PE1	**Parity Enable.** This bit activates hardware parity generation and checking. The parity type is selected by bits S1PT1-0 when parity is enabled. 0: Hardware parity is disabled. 1: Hardware parity is enabled.
3:2	S1DL[1:0]	**Data Length.** 00: 5-bit data 01: 6-bit data 10: 7-bit data 11: 8-bit data
1	XBE1	**Extra Bit Enable.** When enabled, the value of TBX1 will be appended to the data field. 0: Extra Bit Disabled. 1: Extra Bit Enabled.
0	SBL1	**Stop Bit Length.** 0: Short—Stop bit is active for one bit time. 1: Long—Stop bit is active for two bit times (data length = 6, 7, or 8 bits), or 1.5 bit times (data length = 5 bits).

SFR Definition 23.3. SBUF1: UART1 Data Buffer

Bit	7	6	5	4	3	2	1	0
Name	SBUF1[7:0]							
Type	R/W							
Reset	0	0	0	0	0	0	0	0

SFR Address = 0xD3; SFR Page = All Pages

Bit	Name	Description	Write	Read
7:0	SBUF1[7:0]	**Serial Data Buffer Bits.** This SFR is used to both send data from the UART and to read received data from the UART1 receive FIFO.	Writing a byte to SBUF1 initiates the transmission. When data is written to SBUF1, it first goes to the Transmit Holding Register, where it is held for serial transmission. When the transmit shift register is available, data is transferred into the shift register, and SBUF1 may be written again.	Reading SBUF1 retrieves data from the receive FIFO. When read, the oldest byte in the receive FIFO is returned, and removed from the FIFO. Up to three bytes may be held in the FIFO. If there are additional bytes available in the FIFO, the RI1 bit will remain at logic 1, even after being cleared by software.

SFR Definition 23.4. SBCON1: UART1 Baud Rate Generator Control

Bit	7	6	5	4	3	2	1	0
Name		SB1RUN					SB1PS[1:0]	
Type	R/W	R/W	R/W	R/W	R/W	R/W	R/W	
Reset	0	0	0	0	0	0	0	0

SFR Address = 0xAC; SFR Page = All Pages

Bit	Name	Function
7	Reserved	Read = 0b. Must Write 0b.
6	SB1RUN	**Baud Rate Generator Enable.** 0: Baud Rate Generator is disabled. UART1 will not function. 1: Baud Rate Generator is enabled.
5:2	Reserved	Read = 0000b. Must Write 0000b.
1:0	SB1PS[1:0]	**Baud Rate Prescaler Select.** 00: Prescaler = 12 01: Prescaler = 4 10: Prescaler = 48 11: Prescaler = 1

SFR Definition 23.5. SBRLH1: UART1 Baud Rate Generator High Byte

Bit	7	6	5	4	3	2	1	0
Name	SBRLH1[7:0]							
Type	R/W							
Reset	0	0	0	0	0	0	0	0

SFR Address = 0xB5; SFR Page = All Pages

Bit	Name	Function
7:0	SBRLH1[7:0]	**UART1 Baud Rate Reload High Bits.** High Byte of reload value for UART1 Baud Rate Generator.

SFR Definition 23.6. SBRLL1: UART1 Baud Rate Generator Low Byte

Bit	7	6	5	4	3	2	1	0
Name	SBRLL1[7:0]							
Type	R/W							
Reset	0	0	0	0	0	0	0	0

SFR Address = 0xB4; SFR Page = All Pages

Bit	Name	Function
7:0	SBRLL1[7:0]	**UART1 Baud Rate Reload Low Bits.** Low Byte of reload value for UART1 Baud Rate Generator.

24. Enhanced Serial Peripheral Interface (SPI0)

The Enhanced Serial Peripheral Interface (SPI0) provides access to a flexible, full-duplex synchronous serial bus. SPI0 can operate as a master or slave device in both 3-wire or 4-wire modes, and supports multiple masters and slaves on a single SPI bus. The slave-select (NSS) signal can be configured as an input to select SPI0 in slave mode, or to disable Master Mode operation in a multi-master environment, avoiding contention on the SPI bus when more than one master attempts simultaneous data transfers. NSS can also be configured as a chip-select output in master mode, or disabled for 3-wire operation. Additional general purpose port I/O pins can be used to select multiple slave devices in master mode.

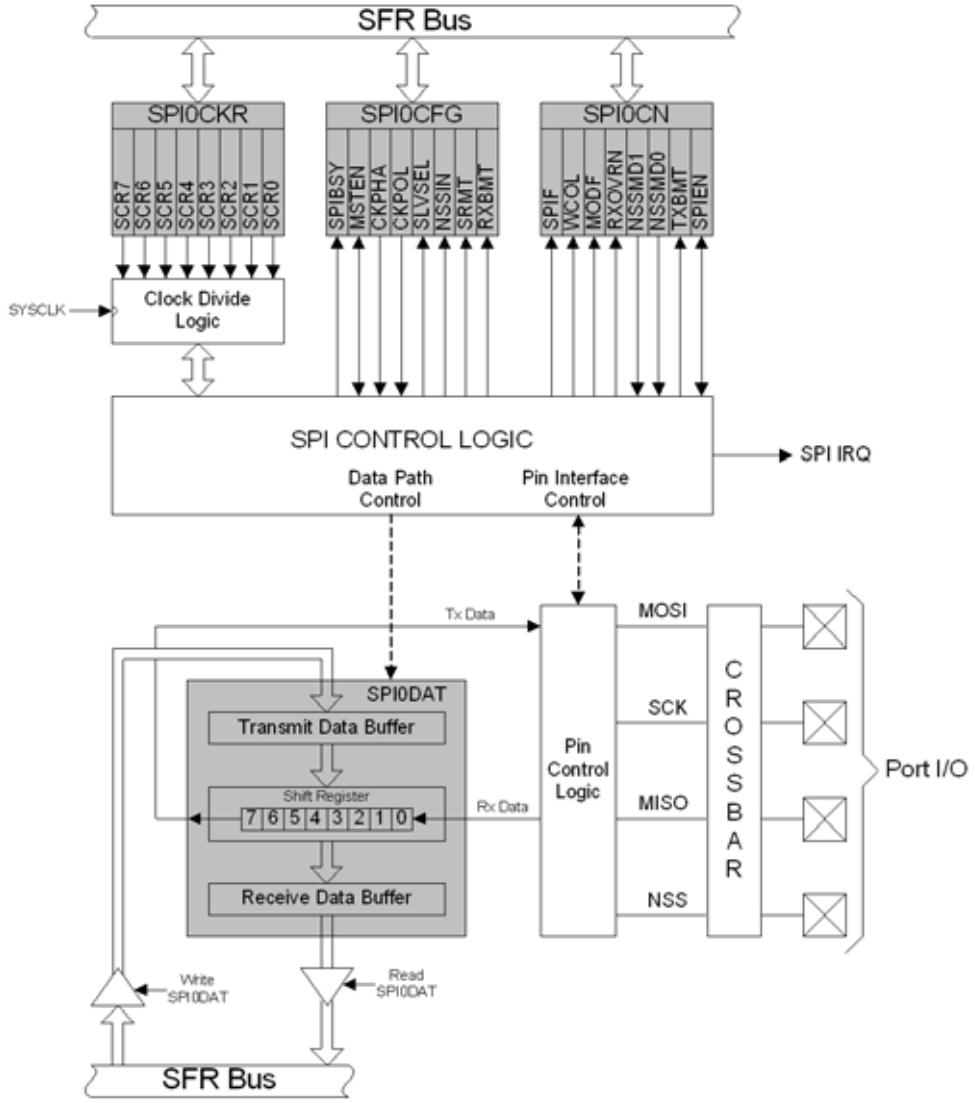

Figure 24.1. SPI Block Diagram

24.1. Signal Descriptions

The four signals used by SPI0 (MOSI, MISO, SCK, NSS) are described below.

24.1.1. Master Out, Slave In (MOSI)

The master-out, slave-in (MOSI) signal is an output from a master device and an input to slave devices. It is used to serially transfer data from the master to the slave. This signal is an output when SPI0 is operating as a master and an input when SPI0 is operating as a slave. Data is transferred most-significant bit first. When configured as a master, MOSI is driven by the MSB of the shift register in both 3- and 4-wire mode.

24.1.2. Master In, Slave Out (MISO)

The master-in, slave-out (MISO) signal is an output from a slave device and an input to the master device. It is used to serially transfer data from the slave to the master. This signal is an input when SPI0 is operating as a master and an output when SPI0 is operating as a slave. Data is transferred most-significant bit first. The MISO pin is placed in a high-impedance state when the SPI module is disabled and when the SPI operates in 4-wire mode as a slave that is not selected. When acting as a slave in 3-wire mode, MISO is always driven by the MSB of the shift register.

24.1.3. Serial Clock (SCK)

The serial clock (SCK) signal is an output from the master device and an input to slave devices. It is used to synchronize the transfer of data between the master and slave on the MOSI and MISO lines. SPI0 generates this signal when operating as a master. The SCK signal is ignored by a SPI slave when the slave is not selected (NSS = 1) in 4-wire slave mode.

24.1.4. Slave Select (NSS)

The function of the slave-select (NSS) signal is dependent on the setting of the NSSMD1 and NSSMD0 bits in the SPI0CN register. There are three possible modes that can be selected with these bits:

1. NSSMD[1:0] = 00: 3-Wire Master or 3-Wire Slave Mode: SPI0 operates in 3-wire mode, and NSS is disabled. When operating as a slave device, SPI0 is always selected in 3-wire mode. Since no select signal is present, SPI0 must be the only slave on the bus in 3-wire mode. This is intended for point-to-point communication between a master and one slave.
2. NSSMD[1:0] = 01: 4-Wire Slave or Multi-Master Mode: SPI0 operates in 4-wire mode, and NSS is enabled as an input. When operating as a slave, NSS selects the SPI0 device. When operating as a master, a 1-to-0 transition of the NSS signal disables the master function of SPI0 so that multiple master devices can be used on the same SPI bus.
3. NSSMD[1:0] = 1x: 4-Wire Master Mode: SPI0 operates in 4-wire mode, and NSS is enabled as an output. The setting of NSSMD0 determines what logic level the NSS pin will output. This configuration should only be used when operating SPI0 as a master device.

See Figure 24.2, Figure 24.3, and Figure 24.4 for typical connection diagrams of the various operational modes. **Note that the setting of NSSMD bits affects the pinout of the device.** When in 3-wire master or 3-wire slave mode, the NSS pin will not be mapped by the crossbar. In all other modes, the NSS signal will be mapped to a pin on the device. See Section “20. Port Input/Output” on page 147 for general purpose port I/O and crossbar information.

24.2. SPI0 Master Mode Operation

A SPI master device initiates all data transfers on a SPI bus. SPI0 is placed in master mode by setting the Master Enable flag (MSTEN, SPI0CN.6). Writing a byte of data to the SPI0 data register (SPI0DAT) when in master mode writes to the transmit buffer. If the SPI shift register is empty, the byte in the transmit buffer is moved to the shift register, and a data transfer begins. The SPI0 master immediately shifts out the data serially on the MOSI line while providing the serial clock on SCK. The SPIF (SPI0CN.7) flag is set to logic

1 at the end of the transfer. If interrupts are enabled, an interrupt request is generated when the SPIF flag is set. While the SPI0 master transfers data to a slave on the MOSI line, the addressed SPI slave device simultaneously transfers the contents of its shift register to the SPI master on the MISO line in a full-duplex operation. Therefore, the SPIF flag serves as both a transmit-complete and receive-data-ready flag. The data byte received from the slave is transferred MSB-first into the master's shift register. When a byte is fully shifted into the register, it is moved to the receive buffer where it can be read by the processor by reading SPI0DAT.

When configured as a master, SPI0 can operate in one of three different modes: multi-master mode, 3-wire single-master mode, and 4-wire single-master mode. The default, multi-master mode is active when NSSMD1 (SPI0CN.3) = 0 and NSSMD0 (SPI0CN.2) = 1. In this mode, NSS is an input to the device, and is used to disable the master SPI0 when another master is accessing the bus. When NSS is pulled low in this mode, MSTEN (SPI0CN.6) and SPIEN (SPI0CN.0) are set to 0 to disable the SPI master device, and a Mode Fault is generated (MODF, SPI0CN.5 = 1). Mode Fault will generate an interrupt if enabled. SPI0 must be manually re-enabled in software under these circumstances. In multi-master systems, devices will typically default to being slave devices while they are not acting as the system master device. In multi-master mode, slave devices can be addressed individually (if needed) using general-purpose I/O pins. Figure 24.2 shows a connection diagram between two master devices in multiple-master mode.

3-wire single-master mode is active when NSSMD1 (SPI0CN.3) = 0 and NSSMD0 (SPI0CN.2) = 0. In this mode, NSS is not used, and is not mapped to an external port pin through the crossbar. Any slave devices that must be addressed in this mode should be selected using general-purpose I/O pins. Figure 24.3 shows a connection diagram between a master device in 3-wire master mode and a slave device.

4-wire single-master mode is active when NSSMD1 (SPI0CN.3) = 1. In this mode, NSS is configured as an output pin, and can be used as a slave-select signal for a single SPI device. In this mode, the output value of NSS is controlled (in software) with the bit NSSMD0 (SPI0CN.2). Additional slave devices can be addressed using general-purpose I/O pins. Figure 24.4 shows a connection diagram for a master device in 4-wire master mode and two slave devices.

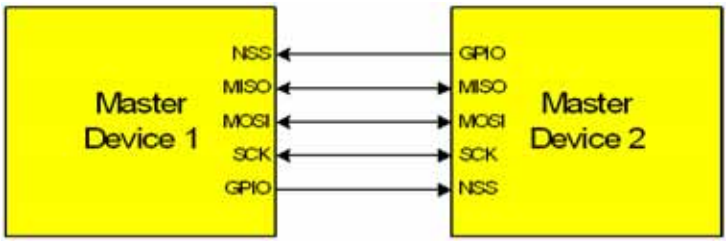

Figure 24.2. Multiple-Master Mode Connection Diagram

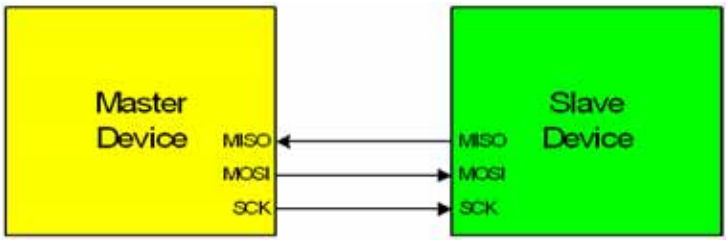

Figure 24.3. 3-Wire Single Master and 3-Wire Single Slave Mode Connection Diagram

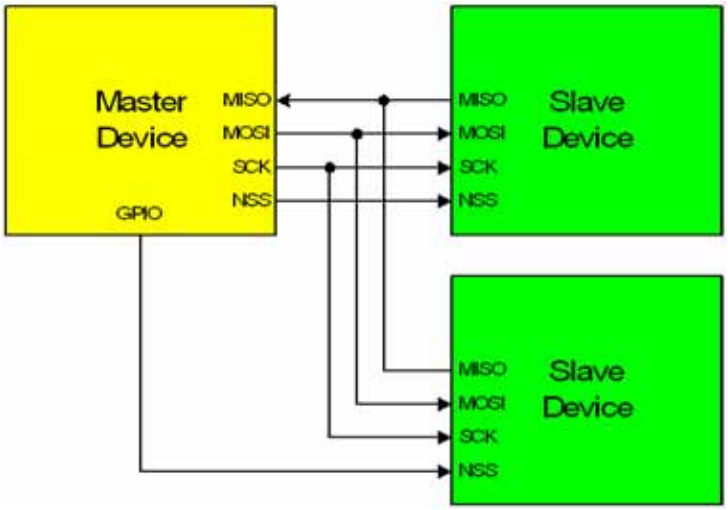

Figure 24.4. 4-Wire Single Master Mode and 4-Wire Slave Mode Connection Diagram

24.3. SPI0 Slave Mode Operation

When SPI0 is enabled and not configured as a master, it will operate as a SPI slave. As a slave, bytes are shifted in through the MOSI pin and out through the MISO pin by a master device controlling the SCK signal. A bit counter in the SPI0 logic counts SCK edges. When 8 bits have been shifted through the shift register, the SPIF flag is set to logic 1, and the byte is copied into the receive buffer. Data is read from the receive buffer by reading SPI0DAT. A slave device cannot initiate transfers. Data to be transferred to the master device is pre-loaded into the shift register by writing to SPI0DAT. Writes to SPI0DAT are double-buffered, and are placed in the transmit buffer first. If the shift register is empty, the contents of the transmit buffer will immediately be transferred into the shift register. When the shift register already contains data, the SPI will load the shift register with the transmit buffer's contents after the last SCK edge of the next (or current) SPI transfer.

When configured as a slave, SPI0 can be configured for 4-wire or 3-wire operation. The default, 4-wire slave mode, is active when NSSMD1 (SPI0CN.3) = 0 and NSSMD0 (SPI0CN.2) = 1. In 4-wire mode, the NSS signal is routed to a port pin and configured as a digital input. SPI0 is enabled when NSS is logic 0, and disabled when NSS is logic 1. The bit counter is reset on a falling edge of NSS. Note that the NSS signal must be driven low at least 2 system clocks before the first active edge of SCK for each byte transfer. Figure 24.4 shows a connection diagram between two slave devices in 4-wire slave mode and a master device.

3-wire slave mode is active when NSSMD1 (SPI0CN.3) = 0 and NSSMD0 (SPI0CN.2) = 0. NSS is not used in this mode, and is not mapped to an external port pin through the crossbar. Since there is no way of uniquely addressing the device in 3-wire slave mode, SPI0 must be the only slave device present on the bus. It is important to note that in 3-wire slave mode there is no external means of resetting the bit counter that determines when a full byte has been received. The bit counter can only be reset by disabling and re-enabling SPI0 with the SPIEN bit. Figure 24.3 shows a connection diagram between a slave device in 3-wire slave mode and a master device.

24.4. SPI0 Interrupt Sources

When SPI0 interrupts are enabled, the following four flags will generate an interrupt when they are set to logic 1:

All of the following bits must be cleared by software.

- The SPI Interrupt Flag, SPIF (SPI0CN.7) is set to logic 1 at the end of each byte transfer. This flag can occur in all SPI0 modes.
- The Write Collision Flag, WCOL (SPI0CN.6) is set to logic 1 if a write to SPI0DAT is attempted when the transmit buffer has not been emptied to the SPI shift register. When this occurs, the write to SPI0DAT will be ignored, and the transmit buffer will not be written.This flag can occur in all SPI0 modes.
- The Mode Fault Flag MODF (SPI0CN.5) is set to logic 1 when SPI0 is configured as a master, and for multi-master mode and the NSS pin is pulled low. When a Mode Fault occurs, the MSTEN and SPIEN bits in SPI0CN are set to logic 0 to disable SPI0 and allow another master device to access the bus.
- The Receive Overrun Flag RXOVRN (SPI0CN.4) is set to logic 1 when configured as a slave, and a transfer is completed and the receive buffer still holds an unread byte from a previous transfer. The new byte is not transferred to the receive buffer, allowing the previously received data byte to be read. The data byte which caused the overrun is lost.

24.5. Serial Clock Phase and Polarity

Four combinations of serial clock phase and polarity can be selected using the clock control bits in the SPI0 Configuration Register (SPI0CFG). The CKPHA bit (SPI0CFG.5) selects one of two clock phases (edge used to latch the data). The CKPOL bit (SPI0CFG.4) selects between an active-high or active-low clock. Both master and slave devices must be configured to use the same clock phase and polarity. SPI0 should be disabled (by clearing the SPIEN bit, SPI0CN.0) when changing the clock phase or polarity. The clock and data line relationships for master mode are shown in Figure 24.5. For slave mode, the clock and data relationships are shown in Figure 24.6 and Figure 24.7. Note that CKPHA should be set to 0 on both the master and slave SPI when communicating between two Silicon Labs C8051 devices.

The SPI0 Clock Rate Register (SPI0CKR) as shown in SFR Definition 24.3 controls the master mode serial clock frequency. This register is ignored when operating in slave mode. When the SPI is configured as a master, the maximum data transfer rate (bits/sec) is one-half the system clock frequency or 12.5 MHz, whichever is slower. When the SPI is configured as a slave, the maximum data transfer rate (bits/sec) for full-duplex operation is 1/10 the system clock frequency, provided that the master issues SCK, NSS (in 4-wire slave mode), and the serial input data synchronously with the slave's system clock. If the master issues SCK, NSS, and the serial input data asynchronously, the maximum data transfer rate (bits/sec) must be less than 1/10 the system clock frequency. In the special case where the master only wants to transmit data to the slave and does not need to receive data from the slave (i.e. half-duplex operation), the SPI slave can receive data at a maximum data transfer rate (bits/sec) of 1/4 the system clock frequency. This is provided that the master issues SCK, NSS, and the serial input data synchronously with the slave's system clock.

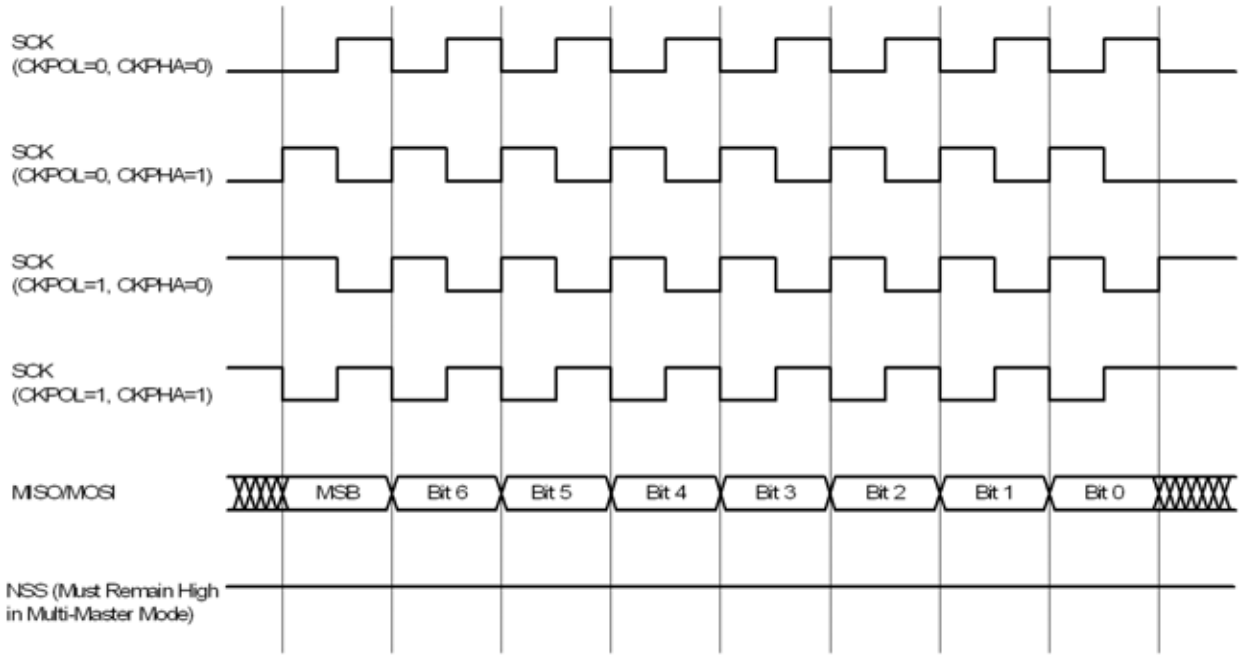

Figure 24.5. Master Mode Data/Clock Timing

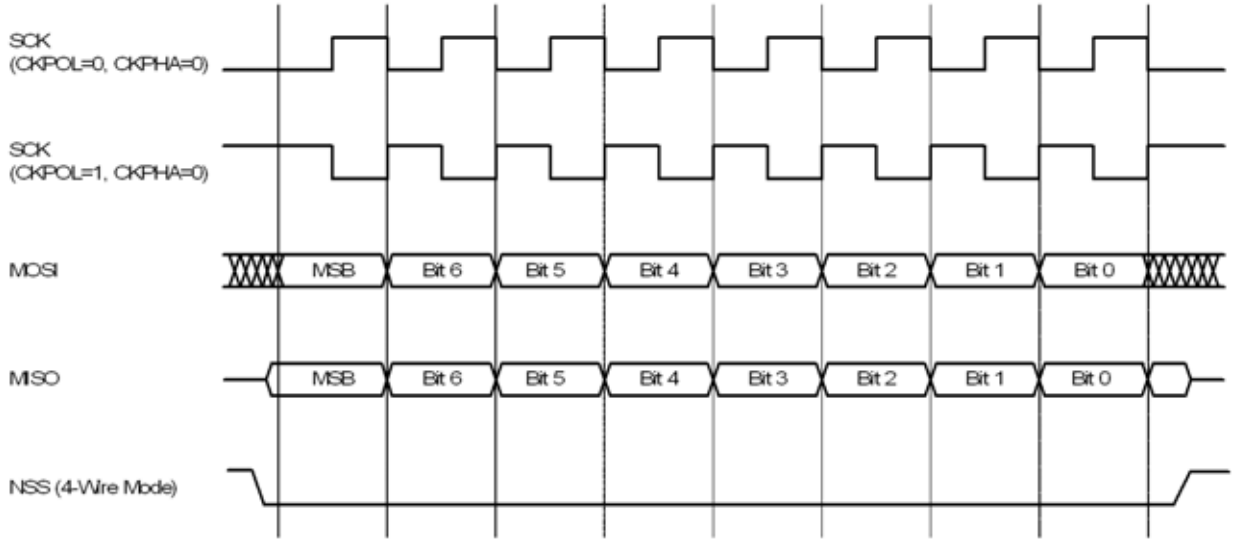

Figure 24.6. Slave Mode Data/Clock Timing (CKPHA = 0)

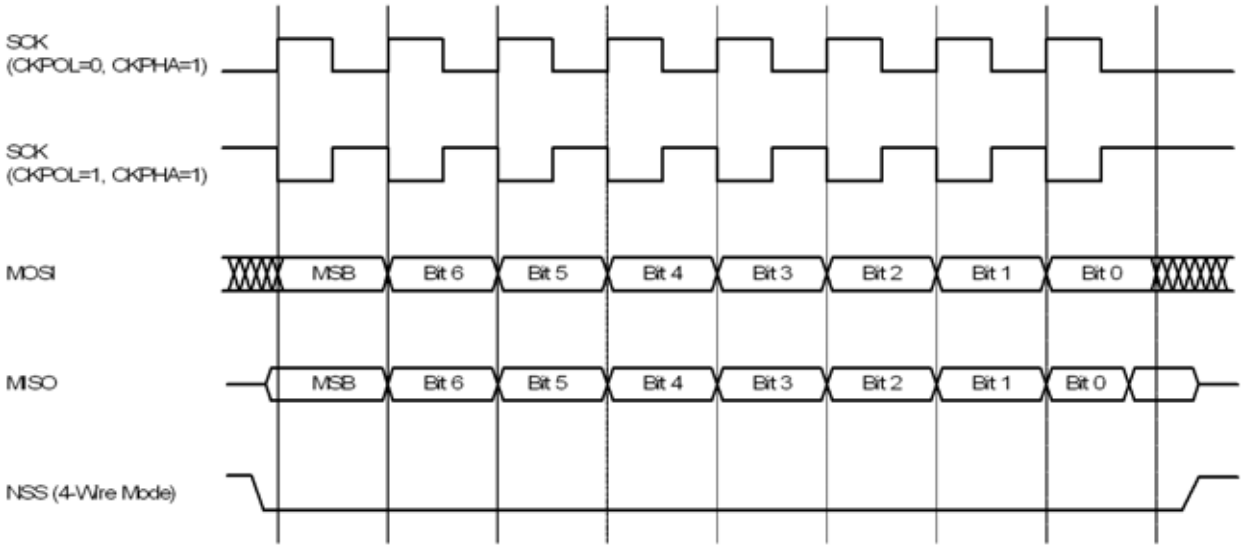

Figure 24.7. Slave Mode Data/Clock Timing (CKPHA = 1)

24.6. SPI Special Function Registers

SPI0 is accessed and controlled through four special function registers in the system controller: SPI0CN Control Register, SPI0DAT Data Register, SPI0CFG Configuration Register, and SPI0CKR Clock Rate Register. The four special function registers related to the operation of the SPI0 Bus are described in the following figures.

SFR Definition 24.1. SPI0CFG: SPI0 Configuration

Bit	7	6	5	4	3	2	1	0
Name	SPIBSY	MSTEN	CKPHA	CKPOL	SLVSEL	NSSIN	SRMT	RXBMT
Type	R	R/W	R/W	R/W	R	R	R	R
Reset	0	0	0	0	0	1	1	1

SFR Address = 0xA1; SFR Page = All Pages

Bit	Name	Function
7	SPIBSY	**SPI Busy.** This bit is set to logic 1 when a SPI transfer is in progress (master or slave mode).
6	MSTEN	**Master Mode Enable.** 0: Disable master mode. Operate in slave mode. 1: Enable master mode. Operate as a master.
5	CKPHA	**SPI0 Clock Phase.** 0: Data centered on first edge of SCK period.* 1: Data centered on second edge of SCK period.*
4	CKPOL	**SPI0 Clock Polarity.** 0: SCK line low in idle state. 1: SCK line high in idle state.
3	SLVSEL	**Slave Selected Flag.** This bit is set to logic 1 whenever the NSS pin is low indicating SPI0 is the selected slave. It is cleared to logic 0 when NSS is high (slave not selected). This bit does not indicate the instantaneous value at the NSS pin, but rather a de-glitched version of the pin input.
2	NSSIN	**NSS Instantaneous Pin Input.** This bit mimics the instantaneous value that is present on the NSS port pin at the time that the register is read. This input is not de-glitched.
1	SRMT	**Shift Register Empty (valid in slave mode only).** This bit will be set to logic 1 when all data has been transferred in/out of the shift register, and there is no new information available to read from the transmit buffer or write to the receive buffer. It returns to logic 0 when a data byte is transferred to the shift register from the transmit buffer or by a transition on SCK. SRMT = 1 when in Master Mode.
0	RXBMT	**Receive Buffer Empty (valid in slave mode only).** This bit will be set to logic 1 when the receive buffer has been read and contains no new information. If there is new information available in the receive buffer that has not been read, this bit will return to logic 0. RXBMT = 1 when in Master Mode.

Note: In slave mode, data on MOSI is sampled in the center of each data bit. In master mode, data on MISO is sampled one SYSCLK before the end of each data bit, to provide maximum settling time for the slave device. See Table 24.1 for timing parameters.

SFR Definition 24.2. SPI0CN: SPI0 Control

Bit	7	6	5	4	3	2	1	0
Name	SPIF	WCOL	MODF	RXOVRN	NSSMD[1:0]		TXBMT	SPIEN
Type	R/W	R/W	R/W	R/W	R/W		R	R/W
Reset	0	0	0	0	0	1	1	0

SFR Address = 0xF8; SFR Page = All Pages; Bit-Addressable

Bit	Name	Function
7	SPIF	**SPI0 Interrupt Flag.** This bit is set to logic 1 by hardware at the end of a data transfer. If SPI interrupts are enabled, an interrupt will be generated. This bit is not automatically cleared by hardware, and must be cleared by software.
6	WCOL	**Write Collision Flag.** This bit is set to logic 1 if a write to SPI0DAT is attempted when TXBMT is 0. When this occurs, the write to SPI0DAT will be ignored, and the transmit buffer will not be written. If SPI interrupts are enabled, an interrupt will be generated. This bit is not automatically cleared by hardware, and must be cleared by software.
5	MODF	**Mode Fault Flag.** This bit is set to logic 1 by hardware when a master mode collision is detected (NSS is low, MSTEN = 1, and NSSMD[1:0] = 01). If SPI interrupts are enabled, an interrupt will be generated. This bit is not automatically cleared by hardware, and must be cleared by software.
4	RXOVRN	**Receive Overrun Flag (valid in slave mode only).** This bit is set to logic 1 by hardware when the receive buffer still holds unread data from a previous transfer and the last bit of the current transfer is shifted into the SPI0 shift register. If SPI interrupts are enabled, an interrupt will be generated. This bit is not automatically cleared by hardware, and must be cleared by software.
3:2	NSSMD[1:0]	**Slave Select Mode.** Selects between the following NSS operation modes: (See Section 24.2 and Section 24.3). 00: 3-Wire Slave or 3-Wire Master Mode. NSS signal is not routed to a port pin. 01: 4-Wire Slave or Multi-Master Mode (Default). NSS is an input to the device. 1x: 4-Wire Single-Master Mode. NSS signal is mapped as an output from the device and will assume the value of NSSMD0.
1	TXBMT	**Transmit Buffer Empty.** This bit will be set to logic 0 when new data has been written to the transmit buffer. When data in the transmit buffer is transferred to the SPI shift register, this bit will be set to logic 1, indicating that it is safe to write a new byte to the transmit buffer.
0	SPIEN	**SPI0 Enable.** 0: SPI disabled. 1: SPI enabled.

SFR Definition 24.3. SPI0CKR: SPI0 Clock Rate

Bit	7	6	5	4	3	2	1	0
Name	SCR[7:0]							
Type	R/W							
Reset	0	0	0	0	0	0	0	0

SFR Address = 0xA2; SFR Page = All Pages

Bit	Name	Function
7:0	SCR[7:0]	**SPI0 Clock Rate.** These bits determine the frequency of the SCK output when the SPI0 module is configured for master mode operation. The SCK clock frequency is a divided version of the system clock, and is given in the following equation, where *SYSCLK* is the system clock frequency and *SPI0CKR* is the 8-bit value held in the SPI0CKR register. $f_{SCK} = \frac{SYSCLK}{2 \times (SPI0CKR[7:0] + 1)}$ for $0 \leq SPI0CKR \leq 255$ Example: If SYSCLK = 2 MHz and SPI0CKR = 0x04, $f_{SCK} = \frac{2000000}{2 \times (4 + 1)}$ $f_{SCK} = 200kHz$

SFR Definition 24.4. SPI0DAT: SPI0 Data

Bit	7	6	5	4	3	2	1	0
Name	SPI0DAT[7:0]							
Type	R/W							
Reset	0	0	0	0	0	0	0	0

SFR Address = 0xA3; SFR Page = All Pages

Bit	Name	Function
7:0	SPI0DAT[7:0]	**SPI0 Transmit and Receive Data.** The SPI0DAT register is used to transmit and receive SPI0 data. Writing data to SPI0DAT places the data into the transmit buffer and initiates a transfer when in Master Mode. A read of SPI0DAT returns the contents of the receive buffer.

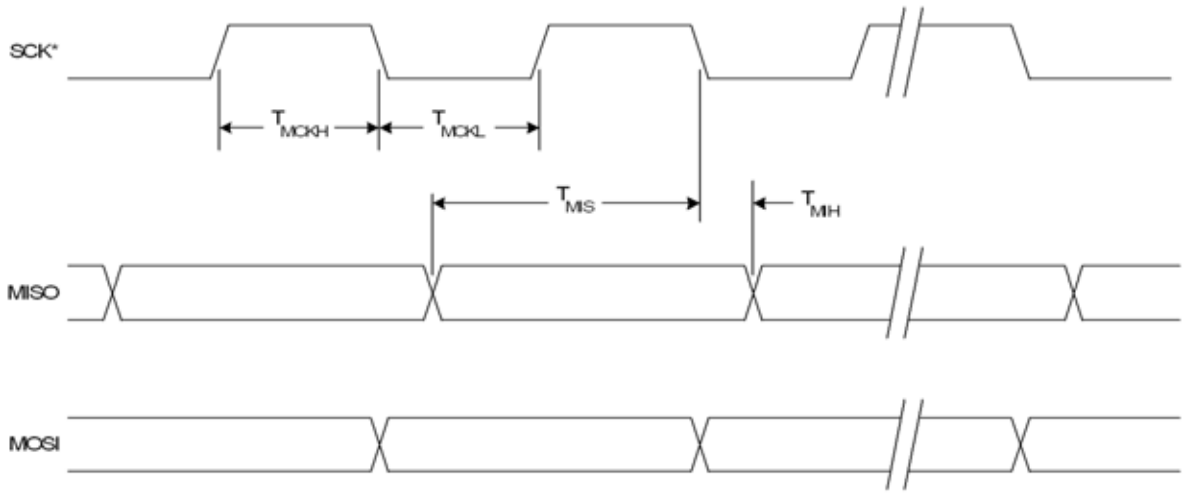

* SCK is shown for CKPOL = 0. SCK is the opposite polarity for CKPOL = 1.

Figure 24.8. SPI Master Timing (CKPHA = 0)

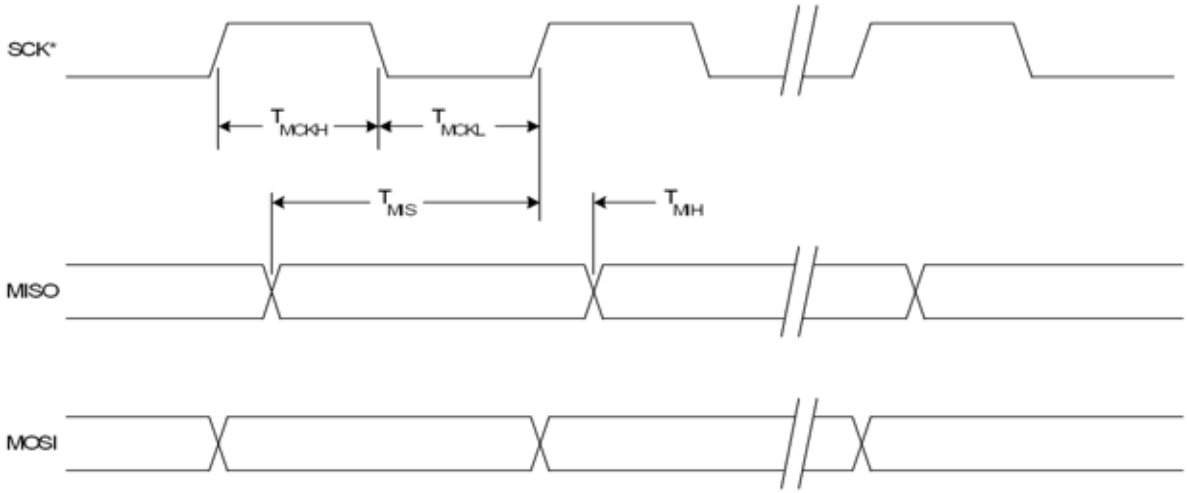

* SCK is shown for CKPOL = 0. SCK is the opposite polarity for CKPOL = 1.

Figure 24.9. SPI Master Timing (CKPHA = 1)

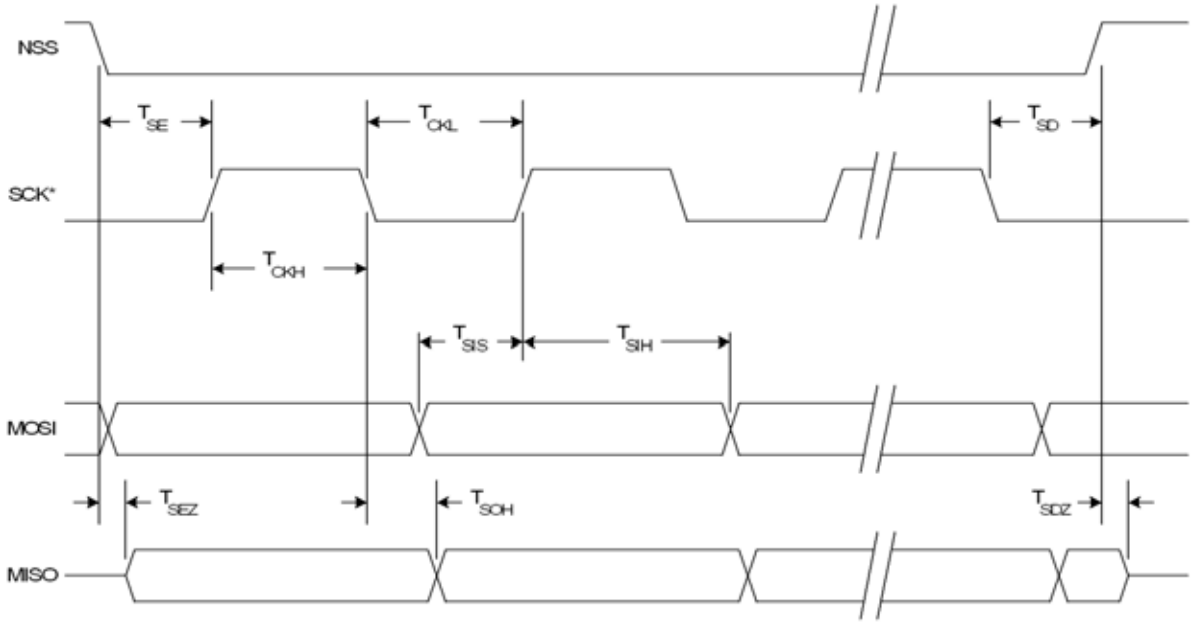

* SCK is shown for CKPOL = 0. SCK is the opposite polarity for CKPOL = 1.

Figure 24.10. SPI Slave Timing (CKPHA = 0)

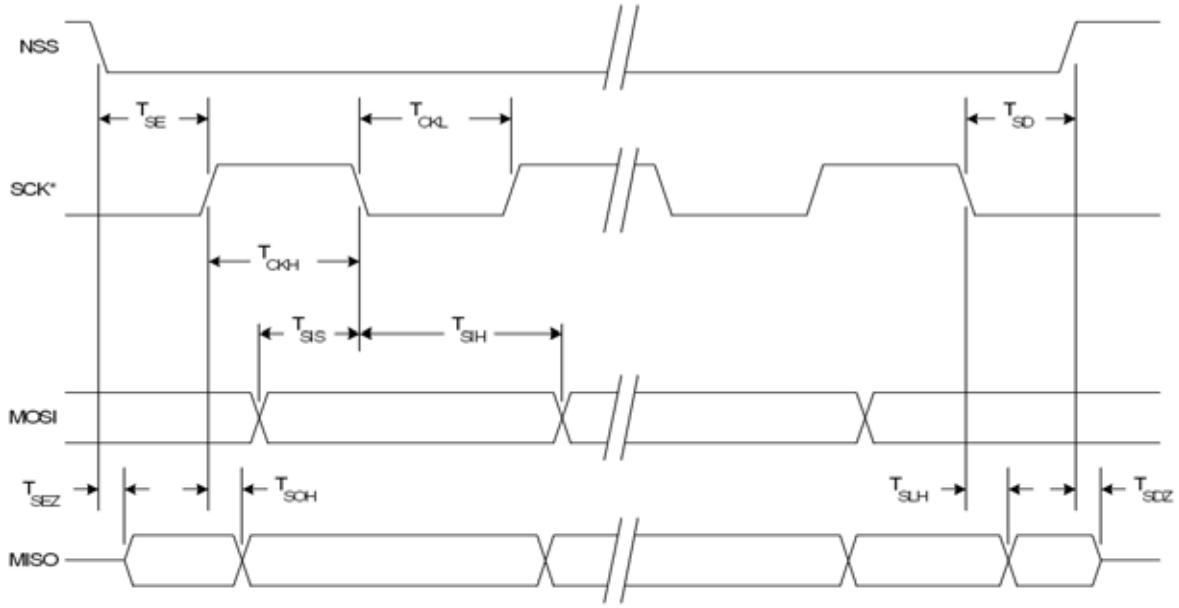

* SCK is shown for CKPOL = 0. SCK is the opposite polarity for CKPOL = 1.

Figure 24.11. SPI Slave Timing (CKPHA = 1)

Table 24.1. SPI Slave Timing Parameters

Parameter	Description	Min	Max	Units
Master Mode Timing (See Figure 24.8 and Figure 24.9)				
T_{MCKH}	SCK High Time	1 x T_{SYSCLK}	—	ns
T_{MCKL}	SCK Low Time	1 x T_{SYSCLK}	—	ns
T_{MIS}	MISO Valid to SCK Shift Edge	1 x T_{SYSCLK} + 20	—	ns
T_{MIH}	SCK Shift Edge to MISO Change	0	—	ns
Slave Mode Timing (See Figure 24.10 and Figure 24.11)				
T_{SE}	NSS Falling to First SCK Edge	2 x T_{SYSCLK}	—	ns
T_{SD}	Last SCK Edge to NSS Rising	2 x T_{SYSCLK}	—	ns
T_{SEZ}	NSS Falling to MISO Valid	—	4 x T_{SYSCLK}	ns
T_{SDZ}	NSS Rising to MISO High-Z	—	4 x T_{SYSCLK}	ns
T_{CKH}	SCK High Time	5 x T_{SYSCLK}	—	ns
T_{CKL}	SCK Low Time	5 x T_{SYSCLK}	—	ns
T_{SIS}	MOSI Valid to SCK Sample Edge	2 x T_{SYSCLK}	—	ns
T_{SIH}	SCK Sample Edge to MOSI Change	2 x T_{SYSCLK}	—	ns
T_{SOH}	SCK Shift Edge to MISO Change	—	4 x T_{SYSCLK}	ns
T_{SLH}	Last SCK Edge to MISO Change (CKPHA = 1 ONLY)	6 x T_{SYSCLK}	8 x T_{SYSCLK}	ns
Note: T_{SYSCLK} is equal to one period of the device system clock (SYSCLK).				

25. Timers

Each MCU includes six counter/timers: two are 16-bit counter/timers compatible with those found in the standard 8051, and four are 16-bit auto-reload timer for use with the SMBus or for general purpose use. These timers can be used to measure time intervals, count external events and generate periodic interrupt requests. Timer 0 and Timer 1 are nearly identical and have four primary modes of operation. Timer 2, 3, 4, and 5 offer 16-bit and split 8-bit timer functionality with auto-reload.

Timer 0 and Timer 1 Modes:	Timer 2, 3, 4, and 5 Modes:
13-bit counter/timer	16-bit timer with auto-reload
16-bit counter/timer	
8-bit counter/timer with auto-reload	Two 8-bit timers with auto-reload
Two 8-bit counter/timers (Timer 0 only)	

Timers 0 and 1 may be clocked by one of five sources, determined by the Timer Mode Select bits (T1M–T0M) and the Clock Scale bits (SCA1–SCA0). The Clock Scale bits define a pre-scaled clock from which Timer 0 and/or Timer 1 may be clocked (See SFR Definition 25.1 for pre-scaled clock selection).

Timer 0/1 may then be configured to use this pre-scaled clock signal or the system clock. Timer 2, 3, 4, and 5 may be clocked by the system clock, the system clock divided by 12, or the external oscillator clock source divided by 8.

Timer 0 and Timer 1 may also be operated as counters. When functioning as a counter, a counter/timer register is incremented on each high-to-low transition at the selected input pin (T0 or T1). Events with a frequency of up to one-fourth the system clock frequency can be counted. The input signal need not be periodic, but it should be held at a given level for at least two full system clock cycles to ensure the level is properly sampled.

SFR Definition 25.1. CKCON: Clock Control

Bit	7	6	5	4	3	2	1	0
Name	T3MH	T3ML	T2MH	T2ML	T1M	T0M	SCA[1:0]	
Type	R/W	R/W	R/W	R/W	R/W	R/W	R/W	
Reset	0	0	0	0	0	0	0	0

SFR Address = 0x8E; SFR Page = All Pages

Bit	Name	Function
7	T3MH	**Timer 3 High Byte Clock Select.** Selects the clock supplied to the Timer 3 high byte (split 8-bit timer mode only). 0: Timer 3 high byte uses the clock defined by the T3XCLK bit in TMR3CN. 1: Timer 3 high byte uses the system clock.
6	T3ML	**Timer 3 Low Byte Clock Select.** Selects the clock supplied to Timer 3. Selects the clock supplied to the lower 8-bit timer in split 8-bit timer mode. 0: Timer 3 low byte uses the clock defined by the T3XCLK bit in TMR3CN. 1: Timer 3 low byte uses the system clock.
5	T2MH	**Timer 2 High Byte Clock Select.** Selects the clock supplied to the Timer 2 high byte (split 8-bit timer mode only). 0: Timer 2 high byte uses the clock defined by the T2XCLK bit in TMR2CN. 1: Timer 2 high byte uses the system clock.
4	T2ML	**Timer 2 Low Byte Clock Select.** Selects the clock supplied to Timer 2. If Timer 2 is configured in split 8-bit timer mode, this bit selects the clock supplied to the lower 8-bit timer. 0: Timer 2 low byte uses the clock defined by the T2XCLK bit in TMR2CN. 1: Timer 2 low byte uses the system clock.
3	T1	**Timer 1 Clock Select.** Selects the clock source supplied to Timer 1. Ignored when C/T1 is set to 1. 0: Timer 1 uses the clock defined by the prescale bits SCA[1:0]. 1: Timer 1 uses the system clock.
2	T0	**Timer 0 Clock Select.** Selects the clock source supplied to Timer 0. Ignored when C/T0 is set to 1. 0: Counter/Timer 0 uses the clock defined by the prescale bits SCA[1:0]. 1: Counter/Timer 0 uses the system clock.
1:0	SCA[1:0]	**Timer 0/1 Prescale Bits.** These bits control the Timer 0/1 Clock Prescaler: 00: System clock divided by 12 01: System clock divided by 4 10: System clock divided by 48 11: External clock divided by 8 (synchronized with the system clock)

SFR Definition 25.2. CKCON1: Clock Control 1

Bit	7	6	5	4	3	2	1	0
Name					T5MH	T5ML	T4MH	T4ML
Type	R	R	R	R	R/W	R/W	R/W	R/W
Reset	0	0	0	0	0	0	0	0

SFR Address = 0xE4; SFR Page = F

Bit	Name	Function
7:4	Unused	Read = 0000b; Write = don't care
3	T5MH	**Timer 5 High Byte Clock Select.** Selects the clock supplied to the Timer 5 high byte (split 8-bit timer mode only). 0: Timer 5 high byte uses the clock defined by the T5XCLK bit in TMR5CN. 1: Timer 5 high byte uses the system clock.
2	T5ML	**Timer 5 Low Byte Clock Select.** Selects the clock supplied to Timer 5. Selects the clock supplied to the lower 8-bit timer in split 8-bit timer mode. 0: Timer 5 low byte uses the clock defined by the T5XCLK bit in TMR5CN. 1: Timer 5 low byte uses the system clock.
1	T4MH	**Timer 4 High Byte Clock Select.** Selects the clock supplied to the Timer 4 high byte (split 8-bit timer mode only). 0: Timer 4 high byte uses the clock defined by the T4XCLK bit in TMR4CN. 1: Timer 4 high byte uses the system clock.
0	T4ML	**Timer 4 Low Byte Clock Select.** Selects the clock supplied to Timer 4. If Timer 4 is configured in split 8-bit timer mode, this bit selects the clock supplied to the lower 8-bit timer. 0: Timer 4 low byte uses the clock defined by the T4XCLK bit in TMR4CN. 1: Timer 4 low byte uses the system clock.

25.1. Timer 0 and Timer 1

Each timer is implemented as a 16-bit register accessed as two separate bytes: a low byte (TL0 or TL1) and a high byte (TH0 or TH1). The Counter/Timer Control register (TCON) is used to enable Timer 0 and Timer 1 as well as indicate status. Timer 0 interrupts can be enabled by setting the ET0 bit in the IE register; Timer 1 interrupts can be enabled by setting the ET1 bit in the IE register. Both counter/timers operate in one of four primary modes selected by setting the Mode Select bits T1M1–T0M0 in the Counter/Timer Mode register (TMOD). Each timer can be configured independently. Each operating mode is described below.

25.1.1. Mode 0: 13-bit Counter/Timer

Timer 0 and Timer 1 operate as 13-bit counter/timers in Mode 0. The following describes the configuration and operation of Timer 0. However, both timers operate identically, and Timer 1 is configured in the same manner as described for Timer 0.

The TH0 register holds the eight MSBs of the 13-bit counter/timer. TL0 holds the five LSBs in bit positions TL0.4–TL0.0. The three upper bits of TL0 (TL0.7–TL0.5) are indeterminate and should be masked out or ignored when reading. As the 13-bit timer register increments and overflows from 0x1FFF (all ones) to 0x0000, the timer overflow flag TF0 in TCON is set and an interrupt will occur if Timer 0 interrupts are enabled.

The C/T0 bit in the TMOD register selects the counter/timer's clock source. When C/T0 is set to logic 1, high-to-low transitions at the selected Timer 0 input pin (T0) increment the timer register (Refer to Section “20.1. Priority Crossbar Decoder” on page 148 for information on selecting and configuring external I/O pins). Clearing C/T selects the clock defined by the T0M bit in register CKCON. When T0M is set, Timer 0 is clocked by the system clock. When T0M is cleared, Timer 0 is clocked by the source selected by the Clock Scale bits in CKCON (see SFR Definition 25.1).

Setting the TR0 bit (TCON.4) enables the timer when either GATE0 in the TMOD register is logic 0 or the input signal $\overline{\text{INT0}}$ is active as defined by bit IN0PL in register IT01CF. Setting GATE0 to 1 allows the timer to be controlled by the external input signal $\overline{\text{INT0}}$, facilitating pulse width measurements

TR0	GATE0	$\overline{\text{INT0}}$	Counter/Timer
0	X	X	Disabled
1	0	X	Enabled
1	1	0	Disabled
1	1	1	Enabled
Note: X = Don't Care			

Setting TR0 does not force the timer to reset. The timer registers should be loaded with the desired initial value before the timer is enabled.

TL1 and TH1 form the 13-bit register for Timer 1 in the same manner as described above for TL0 and TH0. Timer 1 is configured and controlled using the relevant TCON and TMOD bits just as with Timer 0. The input signal $\overline{\text{INT1}}$ is used with Timer 1; the $\overline{\text{INT1}}$ polarity is defined by bit IN1PL in register IT01CF.

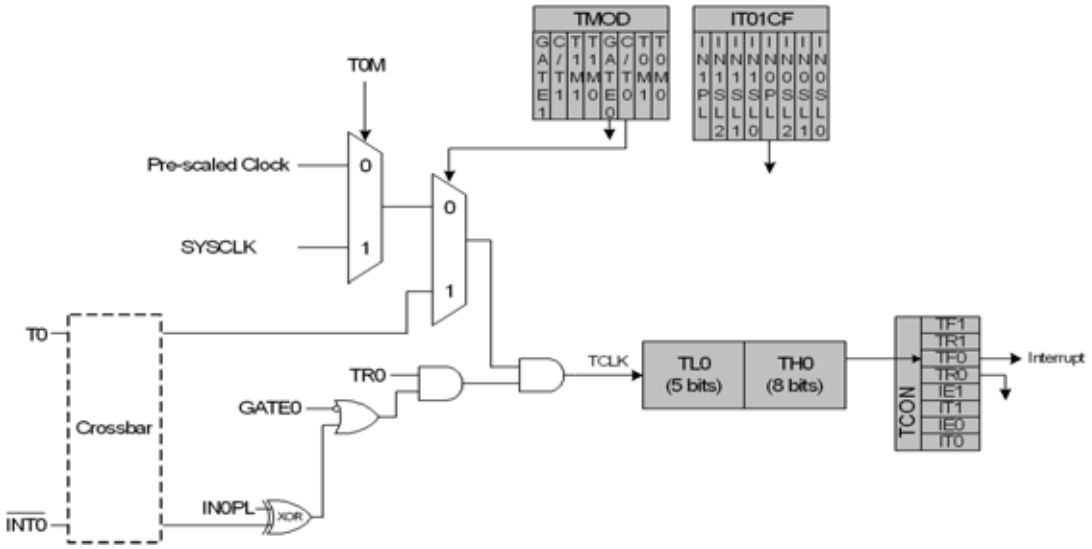

Figure 25.1. T0 Mode 0 Block Diagram

25.1.2. Mode 1: 16-bit Counter/Timer

Mode 1 operation is the same as Mode 0, except that the counter/timer registers use all 16 bits. The counter/timers are enabled and configured in Mode 1 in the same manner as for Mode 0.

25.1.3. Mode 2: 8-bit Counter/Timer with Auto-Reload

Mode 2 configures Timer 0 and Timer 1 to operate as 8-bit counter/timers with automatic reload of the start value. TL0 holds the count and TH0 holds the reload value. When the counter in TL0 overflows from all ones to 0x00, the timer overflow flag TF0 in the TCON register is set and the counter in TL0 is reloaded from TH0. If Timer 0 interrupts are enabled, an interrupt will occur when the TF0 flag is set. The reload value in TH0 is not changed. TL0 must be initialized to the desired value before enabling the timer for the first count to be correct. When in Mode 2, Timer 1 operates identically to Timer 0.

Both counter/timers are enabled and configured in Mode 2 in the same manner as Mode 0. Setting the TR0 bit (TCON.4) enables the timer when either GATE0 in the TMOD register is logic 0 or when the input signal $\overline{\text{INT0}}$ is active as defined by bit IN0PL in register IT01CF (see SFR Definition 16.7 for details on the external input signals $\overline{\text{INT0}}$ and $\overline{\text{INT1}}$).

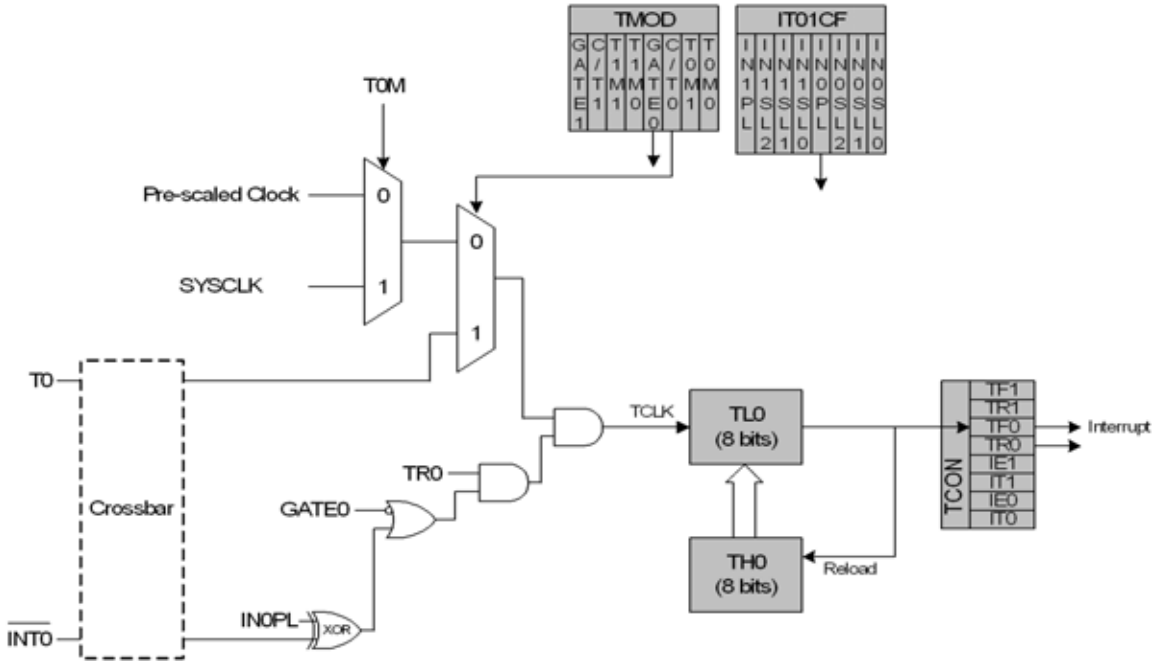

Figure 25.2. T0 Mode 2 Block Diagram

25.1.4. Mode 3: Two 8-bit Counter/Timers (Timer 0 Only)

In Mode 3, Timer 0 is configured as two separate 8-bit counter/timers held in TL0 and TH0. The counter/timer in TL0 is controlled using the Timer 0 control/status bits in TCON and TMOD: TR0, C/T0, GATE0 and TF0. TL0 can use either the system clock or an external input signal as its timebase. The TH0 register is restricted to a timer function sourced by the system clock or prescaled clock. TH0 is enabled using the Timer 1 run control bit TR1. TH0 sets the Timer 1 overflow flag TF1 on overflow and thus controls the Timer 1 interrupt.

Timer 1 is inactive in Mode 3. When Timer 0 is operating in Mode 3, Timer 1 can be operated in Modes 0, 1 or 2, but cannot be clocked by external signals nor set the TF1 flag and generate an interrupt. However, the Timer 1 overflow can be used to generate baud rates or overflow conditions for other peripherals. While Timer 0 is operating in Mode 3, Timer 1 run control is handled through its mode settings. To run Timer 1 while Timer 0 is in Mode 3, set the Timer 1 Mode as 0, 1, or 2. To disable Timer 1, configure it for Mode 3.

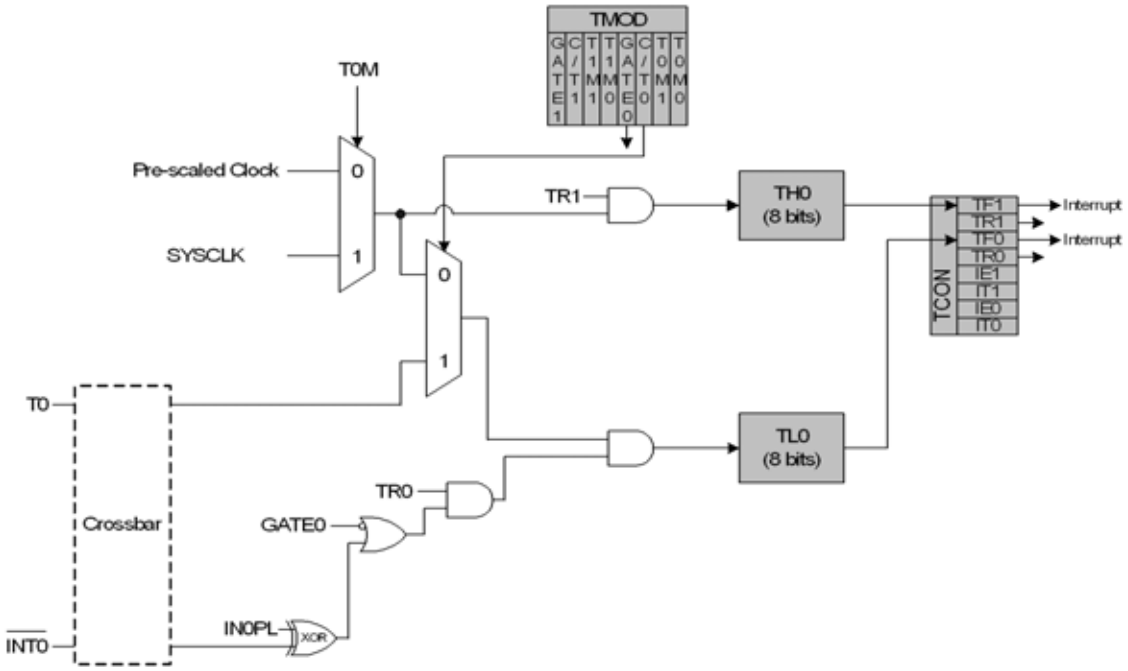

Figure 25.3. T0 Mode 3 Block Diagram

SFR Definition 25.3. TCON: Timer Control

Bit	7	6	5	4	3	2	1	0
Name	TF1	TR1	TF0	TR0	IE1	IT1	IE0	IT0
Type	R/W	R/W	R/W	R/W	R/W	R/W	R/W	R/W
Reset	0	0	0	0	0	0	0	0

SFR Address = 0x88; SFR Page = All Pages; Bit-Addressable

Bit	Name	Function
7	TF1	**Timer 1 Overflow Flag.** Set to 1 by hardware when Timer 1 overflows. This flag can be cleared by software but is automatically cleared when the CPU vectors to the Timer 1 interrupt service routine.
6	TR1	**Timer 1 Run Control.** Timer 1 is enabled by setting this bit to 1.
5	TF0	**Timer 0 Overflow Flag.** Set to 1 by hardware when Timer 0 overflows. This flag can be cleared by software but is automatically cleared when the CPU vectors to the Timer 0 interrupt service routine.
4	TR0	**Timer 0 Run Control.** Timer 0 is enabled by setting this bit to 1.
3	IE1	**External Interrupt 1.** This flag is set by hardware when an edge/level of type defined by IT1 is detected. It can be cleared by software but is automatically cleared when the CPU vectors to the External Interrupt 1 service routine in edge-triggered mode.
2	IT1	**Interrupt 1 Type Select.** This bit selects whether the configured $\overline{\text{INT1}}$ interrupt will be edge or level sensitive. $\overline{\text{INT1}}$ is configured active low or high by the IN1PL bit in the IT01CF register (see SFR Definition 16.7). 0: $\overline{\text{INT1}}$ is level triggered. 1: $\overline{\text{INT1}}$ is edge triggered.
1	IE0	**External Interrupt 0.** This flag is set by hardware when an edge/level of type defined by IT1 is detected. It can be cleared by software but is automatically cleared when the CPU vectors to the External Interrupt 0 service routine in edge-triggered mode.
0	IT0	**Interrupt 0 Type Select.** This bit selects whether the configured $\overline{\text{INT0}}$ interrupt will be edge or level sensitive. $\overline{\text{INT0}}$ is configured active low or high by the IN0PL bit in register IT01CF (see SFR Definition 16.7). 0: $\overline{\text{INT0}}$ is level triggered. 1: $\overline{\text{INT0}}$ is edge triggered.

SFR Definition 25.4. TMOD: Timer Mode

Bit	7	6	5	4	3	2	1	0
Name	GATE1	C/T1	T1M[1:0]		GATE0	C/T0	T0M[1:0]	
Type	R/W	R/W	R/W		R/W	R/W	R/W	
Reset	0	0	0	0	0	0	0	0

SFR Address = 0x89; SFR Page = All Pages

Bit	Name	Function
7	GATE1	**Timer 1 Gate Control.** 0: Timer 1 enabled when TR1 = 1 irrespective of $\overline{\text{INT1}}$ logic level. 1: Timer 1 enabled only when TR1 = 1 AND $\overline{\text{INT1}}$ is active as defined by bit IN1PL in register IT01CF (see SFR Definition 16.7).
6	C/T1	**Counter/Timer 1 Select.** 0: Timer: Timer 1 incremented by clock defined by T1M bit in register CKCON. 1: Counter: Timer 1 incremented by high-to-low transitions on external pin (T1).
5:4	T1M[1:0]	**Timer 1 Mode Select.** These bits select the Timer 1 operation mode. 00: Mode 0, 13-bit Counter/Timer 01: Mode 1, 16-bit Counter/Timer 10: Mode 2, 8-bit Counter/Timer with Auto-Reload 11: Mode 3, Timer 1 Inactive
3	GATE0	**Timer 0 Gate Control.** 0: Timer 0 enabled when TR0 = 1 irrespective of $\overline{\text{INT0}}$ logic level. 1: Timer 0 enabled only when TR0 = 1 AND $\overline{\text{INT0}}$ is active as defined by bit IN0PL in register IT01CF (see SFR Definition 16.7).
2	C/T0	**Counter/Timer 0 Select.** 0: Timer: Timer 0 incremented by clock defined by T0M bit in register CKCON. 1: Counter: Timer 0 incremented by high-to-low transitions on external pin (T0).
1:0	T0M[1:0]	**Timer 0 Mode Select.** These bits select the Timer 0 operation mode. 00: Mode 0, 13-bit Counter/Timer 01: Mode 1, 16-bit Counter/Timer 10: Mode 2, 8-bit Counter/Timer with Auto-Reload 11: Mode 3, Two 8-bit Counter/Timers

SFR Definition 25.5. TL0: Timer 0 Low Byte

Bit	7	6	5	4	3	2	1	0
Name	TL0[7:0]							
Type	R/W							
Reset	0	0	0	0	0	0	0	0

SFR Address = 0x8A; SFR Page = All Pages

Bit	Name	Function
7:0	TL0[7:0]	**Timer 0 Low Byte.** The TL0 register is the low byte of the 16-bit Timer 0.

SFR Definition 25.6. TL1: Timer 1 Low Byte

Bit	7	6	5	4	3	2	1	0
Name	TL1[7:0]							
Type	R/W							
Reset	0	0	0	0	0	0	0	0

SFR Address = 0x8B; SFR Page = All Pages

Bit	Name	Function
7:0	TL1[7:0]	**Timer 1 Low Byte.** The TL1 register is the low byte of the 16-bit Timer 1.

SFR Definition 25.7. TH0: Timer 0 High Byte

Bit	7	6	5	4	3	2	1	0
Name	TH0[7:0]							
Type	R/W							
Reset	0	0	0	0	0	0	0	0

SFR Address = 0x8C; SFR Page = All Pages

Bit	Name	Function
7:0	TH0[7:0]	**Timer 0 High Byte.** The TH0 register is the high byte of the 16-bit Timer 0.

SFR Definition 25.8. TH1: Timer 1 High Byte

Bit	7	6	5	4	3	2	1	0
Name	TH1[7:0]							
Type	R/W							
Reset	0	0	0	0	0	0	0	0

SFR Address = 0x8D; SFR Page = All Pages

Bit	Name	Function
7:0	TH1[7:0]	**Timer 1 High Byte.** The TH1 register is the high byte of the 16-bit Timer 1.

25.2. Timer 2

Timer 2 is a 16-bit timer formed by two 8-bit SFRs: TMR2L (low byte) and TMR2H (high byte). Timer 2 may operate in 16-bit auto-reload mode, (split) 8-bit auto-reload mode, or Low-Frequency Oscillator (LFO) Falling Edge capture mode. The Timer 2 operation mode is defined by the T2SPLIT (TMR2CN.3), T2CE (TMR2CN.4) bits, and T2CSS (TMR2CN.1) bits.

Timer 2 may be clocked by the system clock, the system clock divided by 12, or the external oscillator source divided by 8. The external clock mode is ideal for real-time clock (RTC) functionality, where the internal oscillator drives the system clock while Timer 2 (and/or the PCA) is clocked by an external precision oscillator. Note that the external oscillator source divided by 8 is synchronized with the system clock.

25.2.1. 16-bit Timer with Auto-Reload

When T2SPLIT (TMR2CN.3) is zero, Timer 2 operates as a 16-bit timer with auto-reload. Timer 2 can be clocked by SYSCLK, SYSCLK divided by 12, or the external oscillator clock source divided by 8. As the 16-bit timer register increments and overflows from 0xFFFF to 0x0000, the 16-bit value in the Timer 2 reload registers (TMR2RLH and TMR2RLL) is loaded into the Timer 2 register as shown in Figure 25.4, and the Timer 2 High Byte Overflow Flag (TMR2CN.7) is set. If Timer 2 interrupts are enabled (if IE.5 is set), an interrupt will be generated on each Timer 2 overflow. Additionally, if Timer 2 interrupts are enabled and the TF2LEN bit is set (TMR2CN.5), an interrupt will be generated each time the lower 8 bits (TMR2L) overflow from 0xFF to 0x00.

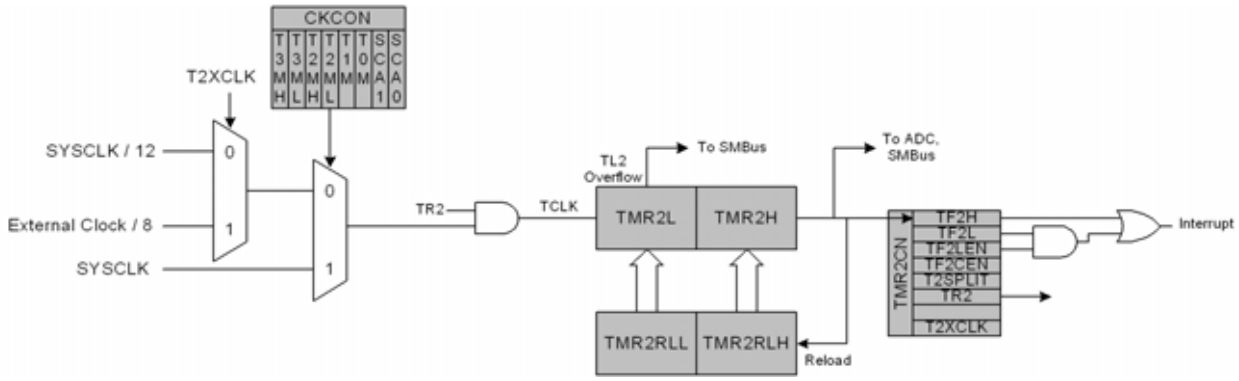

Figure 25.4. Timer 2 16-Bit Mode Block Diagram

25.2.2. 8-bit Timers with Auto-Reload

When T2SPLIT is set, Timer 2 operates as two 8-bit timers (TMR2H and TMR2L). Both 8-bit timers operate in auto-reload mode as shown in Figure 25.5. TMR2RLL holds the reload value for TMR2L; TMR2RLH holds the reload value for TMR2H. The TR2 bit in TMR2CN handles the run control for TMR2H. TMR2L is always running when configured for 8-bit Mode.

Each 8-bit timer may be configured to use SYSCLK, SYSCLK divided by 12, or the external oscillator clock source divided by 8. The Timer 2 Clock Select bits (T2MH and T2ML in CKCON) select either SYSCLK or the clock defined by the Timer 2 External Clock Select bit (T2XCLK in TMR2CN), as follows:

T2MH	T2XCLK	TMR2H Clock Source
0	0	SYSCLK / 12
0	1	External Clock / 8
1	X	SYSCLK

T2ML	T2XCLK	TMR2L Clock Source
0	0	SYSCLK / 12
0	1	External Clock / 8
1	X	SYSCLK

The TF2H bit is set when TMR2H overflows from 0xFF to 0x00; the TF2L bit is set when TMR2L overflows from 0xFF to 0x00. When Timer 2 interrupts are enabled (IE.5), an interrupt is generated each time TMR2H overflows. If Timer 2 interrupts are enabled and TF2LEN (TMR2CN.5) is set, an interrupt is generated each time either TMR2L or TMR2H overflows. When TF2LEN is enabled, software must check the TF2H and TF2L flags to determine the source of the Timer 2 interrupt. The TF2H and TF2L interrupt flags are not cleared by hardware and must be manually cleared by software.

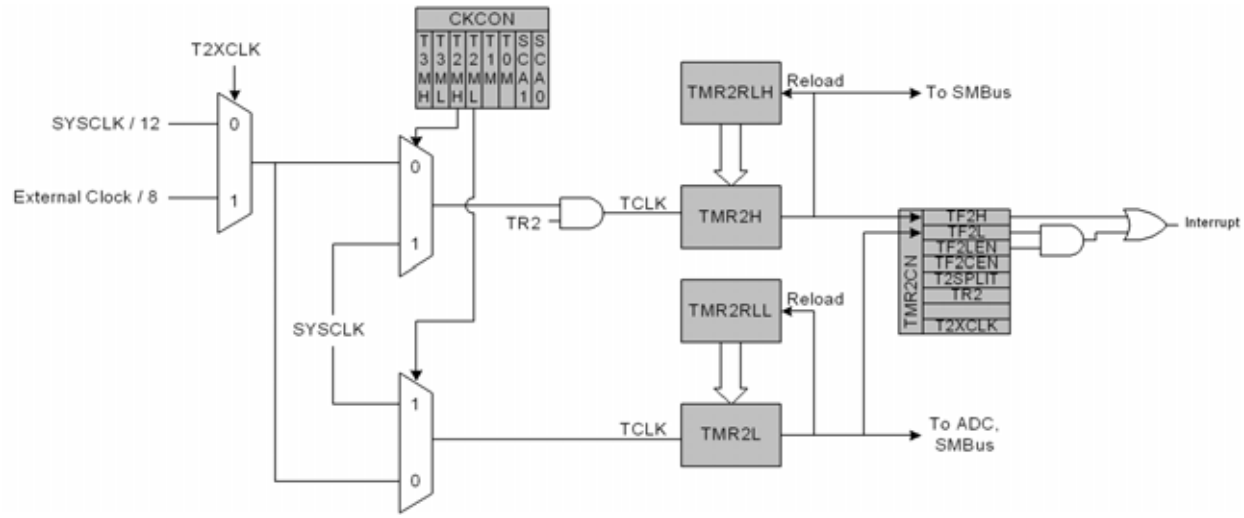

Figure 25.5. Timer 2 8-Bit Mode Block Diagram

25.2.3. Timer 2 Capture Modes: LFO Falling Edge

When T2CE = 1, Timer 2 will operate in a special capture mode with the LFO (T2CSS is set to 1). The LFO falling-edge capture mode can be used to calibrate the internal Low-Frequency Oscillator against the internal High-Frequency Oscillator or an external clock source. When T2SPLIT = 0, Timer 2 counts up and overflows from 0xFFFF to 0x0000. Each time a capture event is received, the contents of the Timer 2 registers (TMR2H:TMR2L) are latched into the Timer 2 Reload registers (TMR2RLH:TMR2RLL). A Timer 2 interrupt is generated if enabled.

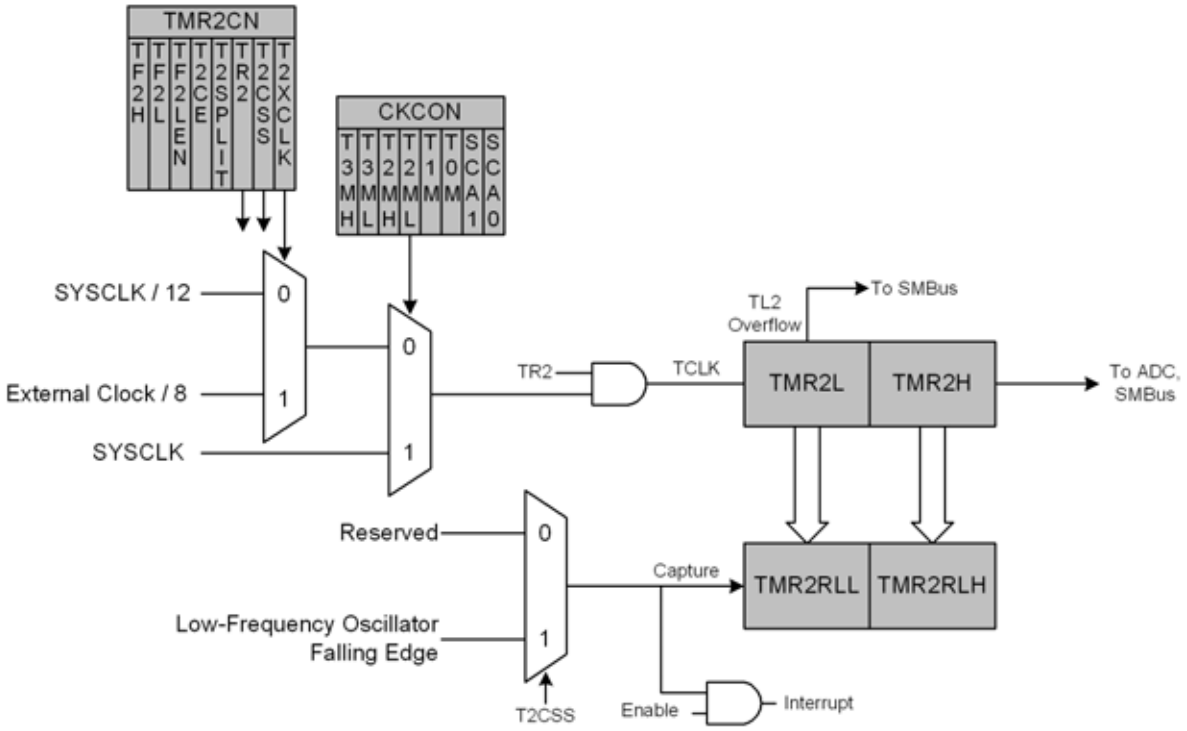

Figure 25.6. Timer 2 Capture Mode (T2SPLIT = 0)

When T2SPLIT = 1, the Timer 2 registers (TMR2H and TMR2L) act as two 8-bit counters. Each counter counts up independently and overflows from 0xFF to 0x00. Each time a capture event is received, the contents of the Timer 2 registers are latched into the Timer 2 Reload registers (TMR2RLH and TMR2RLL). A Timer 2 interrupt is generated if enabled.

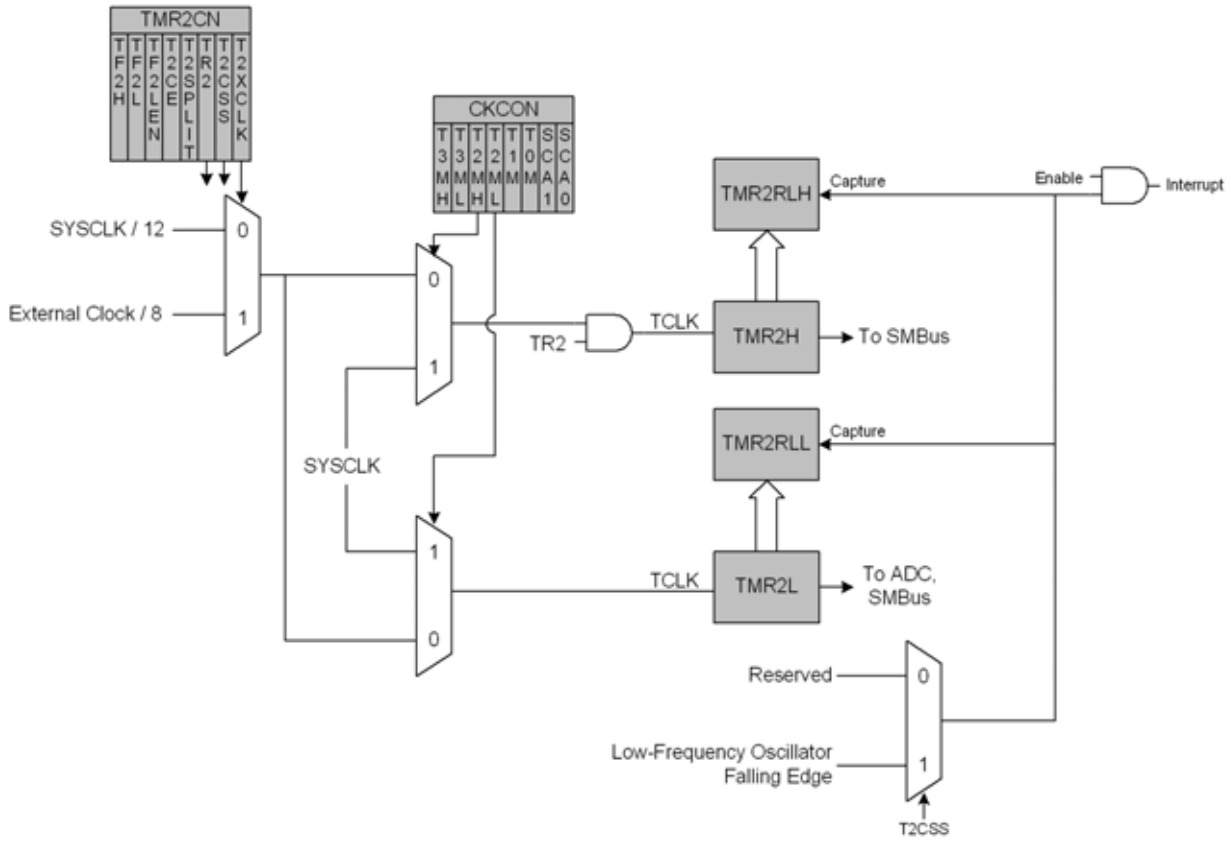

Figure 25.7. Timer 2 Capture Mode (T2SPLIT = 0)

SFR Definition 25.9. TMR2CN: Timer 2 Control

Bit	7	6	5	4	3	2	1	0
Name	TF2H	TF2L	TF2LEN	TF2CEN	T2SPLIT	TR2	T2CSS	T2XCLK
Type	R/W	R/W	R/W	R/W	R/W	R/W	R/W	R/W
Reset	0	0	0	0	0	0	0	0

SFR Address = 0xC8; SFR Page = 0; Bit-Addressable

Bit	Name	Function
7	TF2H	**Timer 2 High Byte Overflow Flag.** Set by hardware when the Timer 2 high byte overflows from 0xFF to 0x00. In 16 bit mode, this will occur when Timer 2 overflows from 0xFFFF to 0x0000. When the Timer 2 interrupt is enabled, setting this bit causes the CPU to vector to the Timer 2 interrupt service routine. This bit is not automatically cleared by hardware.
6	TF2L	**Timer 2 Low Byte Overflow Flag.** Set by hardware when the Timer 2 low byte overflows from 0xFF to 0x00. TF2L will be set when the low byte overflows regardless of the Timer 2 mode. This bit is not automatically cleared by hardware.
5	TF2LEN	**Timer 2 Low Byte Interrupt Enable.** When set to 1, this bit enables Timer 2 Low Byte interrupts. If Timer 2 interrupts are also enabled, an interrupt will be generated when the low byte of Timer 2 overflows.
4	TF2CEN	**Timer 2 Low-Frequency Oscillator Capture Enable.** When set to 1, this bit enables Timer 2 Low-Frequency Oscillator Capture Mode. If TF2CEN is set and Timer 2 interrupts are enabled, an interrupt will be generated on a falling edge of the low-frequency oscillator output, and the current 16-bit timer value in TMR2H:TMR2L will be copied to TMR2RLH:TMR2RLL.
3	T2SPLIT	**Timer 2 Split Mode Enable.** When this bit is set, Timer 2 operates as two 8-bit timers with auto-reload.
2	TR2	**Timer 2 Run Control.** Timer 2 is enabled by setting this bit to 1. In 8-bit mode, this bit enables/disables TMR2H only; TMR2L is always enabled in split mode.
1	T2CSS	**Timer 2 Capture Source Select.** This bit selects the source of a capture event when bit T2CE is set to 1. 0: Reserved. 1: Capture source is falling edge of Low-Frequency Oscillator.
0	T2XCLK	**Timer 2 External Clock Select.** This bit selects the external clock source for Timer 2. However, the Timer 2 Clock Select bits (T2MH and T2ML in register CKCON) may still be used to select between the external clock and the system clock for either timer. 0: Timer 2 clock is the system clock divided by 12. 1: Timer 2 clock is the external clock divided by 8 (synchronized with SYSCLK).

SFR Definition 25.10. TMR2RLL: Timer 2 Reload Register Low Byte

Bit	7	6	5	4	3	2	1	0
Name	TMR2RLL[7:0]							
Type	R/W							
Reset	0	0	0	0	0	0	0	0

SFR Address = 0xCA; SFR Page = 0

Bit	Name	Function
7:0	TMR2RLL[7:0]	**Timer 2 Reload Register Low Byte.** TMR2RLL holds the low byte of the reload value for Timer 2.

SFR Definition 25.11. TMR2RLH: Timer 2 Reload Register High Byte

Bit	7	6	5	4	3	2	1	0
Name	TMR2RLH[7:0]							
Type	R/W							
Reset	0	0	0	0	0	0	0	0

SFR Address = 0xCB; SFR Page = 0

Bit	Name	Function
7:0	TMR2RLH[7:0]	**Timer 2 Reload Register High Byte.** TMR2RLH holds the high byte of the reload value for Timer 2.

SFR Definition 25.12. TMR2L: Timer 2 Low Byte

Bit	7	6	5	4	3	2	1	0
Name	TMR2L[7:0]							
Type	R/W							
Reset	0	0	0	0	0	0	0	0

SFR Address = 0xCC; SFR Page = 0

Bit	Name	Function
7:0	TMR2L[7:0]	**Timer 2 Low Byte.** In 16-bit mode, the TMR2L register contains the low byte of the 16-bit Timer 2. In 8-bit mode, TMR2L contains the 8-bit low byte timer value.

SFR Definition 25.13. TMR2H Timer 2 High Byte

Bit	7	6	5	4	3	2	1	0
Name	TMR2H[7:0]							
Type	R/W							
Reset	0	0	0	0	0	0	0	0

SFR Address = 0xCD; SFR Page = 0

Bit	Name	Function
7:0	TMR2H[7:0]	**Timer 2 Low Byte.** In 16-bit mode, the TMR2H register contains the high byte of the 16-bit Timer 2. In 8-bit mode, TMR2H contains the 8-bit high byte timer value.

25.3. Timer 3

Timer 3 is a 16-bit timer formed by two 8-bit SFRs: TMR3L (low byte) and TMR3H (high byte). Timer 3 may operate in 16-bit auto-reload mode, (split) 8-bit auto-reload mode, or Low-Frequency Oscillator (LFO) Rising Edge capture mode. The Timer 3 operation mode is defined by the T3SPLIT (TMR3CN.3), T3CE (TMR3CN.4) bits, and T3CSS (TMR3CN.1) bits.

Timer 3 may be clocked by the system clock, the system clock divided by 12, or the external oscillator source divided by 8. The external clock mode is ideal for real-time clock (RTC) functionality, where the internal oscillator drives the system clock while Timer 3 (and/or the PCA) is clocked by an external precision oscillator. Note that the external oscillator source divided by 8 is synchronized with the system clock.

25.3.1. 16-bit Timer with Auto-Reload

When T3SPLIT (TMR3CN.3) is zero, Timer 3 operates as a 16-bit timer with auto-reload. Timer 3 can be clocked by SYSCLK, SYSCLK divided by 12, or the external oscillator clock source divided by 8. As the 16-bit timer register increments and overflows from 0xFFFF to 0x0000, the 16-bit value in the Timer 3 reload registers (TMR3RLH and TMR3RLL) is loaded into the Timer 3 register as shown in Figure 25.8, and the Timer 3 High Byte Overflow Flag (TMR3CN.7) is set. If Timer 3 interrupts are enabled (if EIE1.7 is set), an interrupt will be generated on each Timer 3 overflow. Additionally, if Timer 3 interrupts are enabled and the TF3LEN bit is set (TMR3CN.5), an interrupt will be generated each time the lower 8 bits (TMR3L) overflow from 0xFF to 0x00.

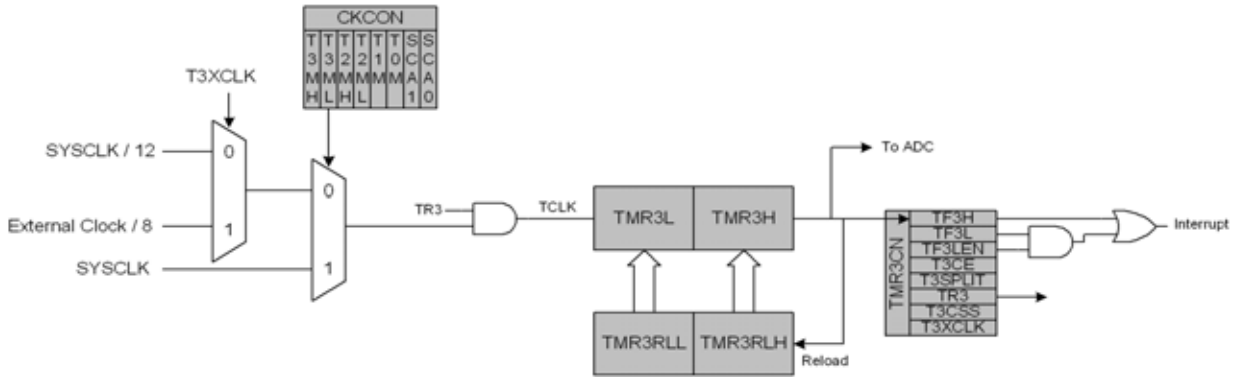

Figure 25.8. Timer 3 16-Bit Mode Block Diagram

25.3.2. 8-bit Timers with Auto-Reload

When T3SPLIT is 1 and T3CE = 0, Timer 3 operates as two 8-bit timers (TMR3H and TMR3L). Both 8-bit timers operate in auto-reload mode as shown in Figure 25.9. TMR3RLL holds the reload value for TMR3L; TMR3RLH holds the reload value for TMR3H. The TR3 bit in TMR3CN handles the run control for TMR3H. TMR3L is always running when configured for 8-bit Mode.

Each 8-bit timer may be configured to use SYSCLK, SYSCLK divided by 12, or the external oscillator clock source divided by 8. The Timer 3 Clock Select bits (T3MH and T3ML in CKCON) select either SYSCLK or the clock defined by the Timer 3 External Clock Select bit (T3XCLK in TMR3CN), as follows:

T3MH	T3XCLK	TMR3H Clock Source
0	0	SYSCLK / 12
0	1	External Clock / 8
1	X	SYSCLK

T3ML	T3XCLK	TMR3L Clock Source
0	0	SYSCLK / 12
0	1	External Clock / 8
1	X	SYSCLK

The TF3H bit is set when TMR3H overflows from 0xFF to 0x00; the TF3L bit is set when TMR3L overflows from 0xFF to 0x00. When Timer 3 interrupts are enabled, an interrupt is generated each time TMR3H overflows. If Timer 3 interrupts are enabled and TF3LEN (TMR3CN.5) is set, an interrupt is generated each time either TMR3L or TMR3H overflows. When TF3LEN is enabled, software must check the TF3H and TF3L flags to determine the source of the Timer 3 interrupt. The TF3H and TF3L interrupt flags are not cleared by hardware and must be manually cleared by software.

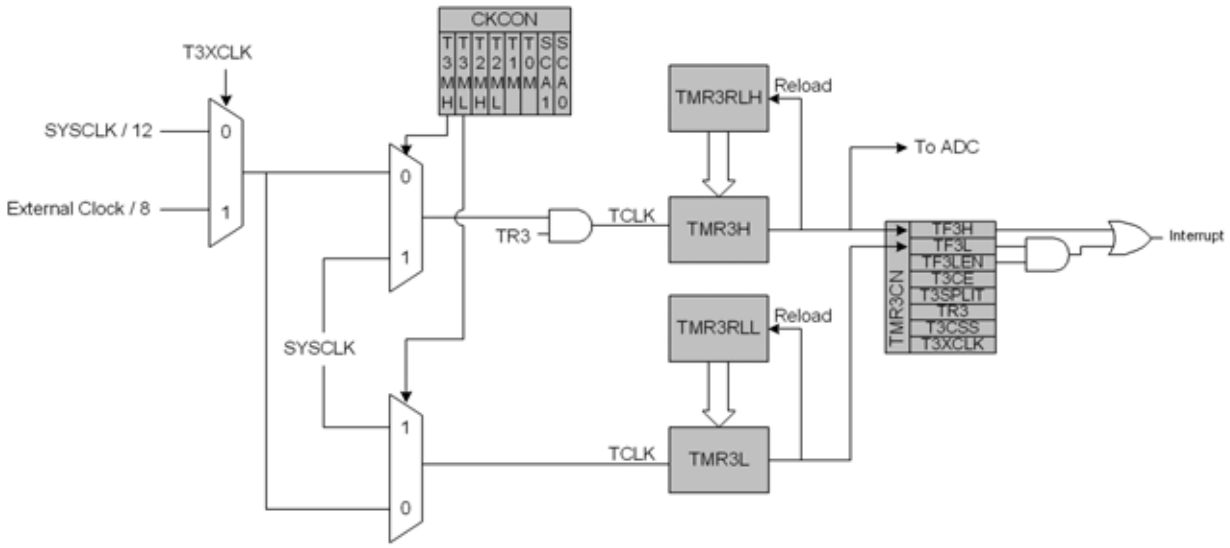

Figure 25.9. Timer 3 8-Bit Mode Block Diagram

25.3.3. Timer 3 Capture Modes: LFO Falling Edge

When T3CE = 1, Timer 3 will operate in a special capture mode with the LFO (T3CSS is set to 1). The LFO falling-edge capture mode can be used to calibrate the internal Low-Frequency Oscillator against the internal High-Frequency Oscillator or an external clock source. When T3SPLIT = 0, Timer 3 counts up and overflows from 0xFFFF to 0x0000. Each time a capture event is received, the contents of the Timer 3 registers (TMR3H:TMR3L) are latched into the Timer 3 Reload registers (TMR3RLH:TMR3RLL). A Timer 3 interrupt is generated if enabled.

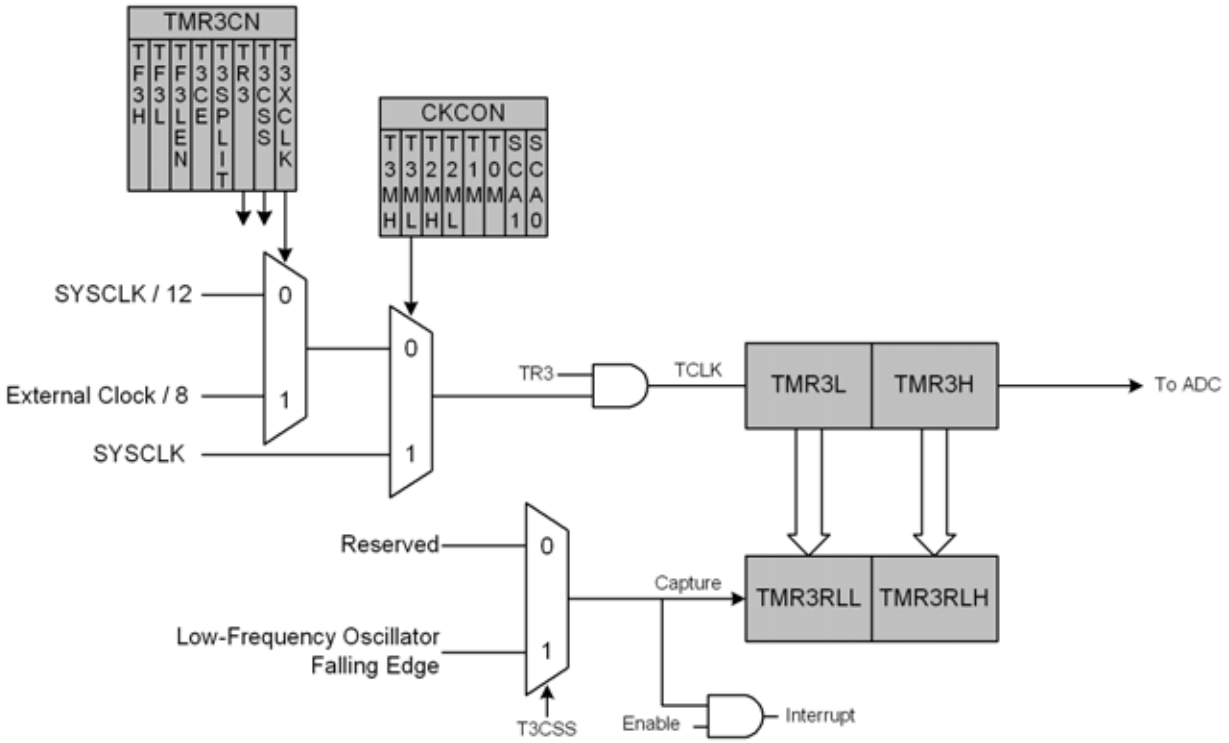

Figure 25.10. Timer 3 Capture Mode (T3SPLIT = 0)

When T3SPLIT = 1, the Timer 3 registers (TMR3H and TMR3L) act as two 8-bit counters. Each counter counts up independently and overflows from 0xFF to 0x00. Each time a capture event is received, the contents of the Timer 3 registers are latched into the Timer 3 Reload registers (TMR3RLH and TMR3RLL). A Timer 3 interrupt is generated if enabled.

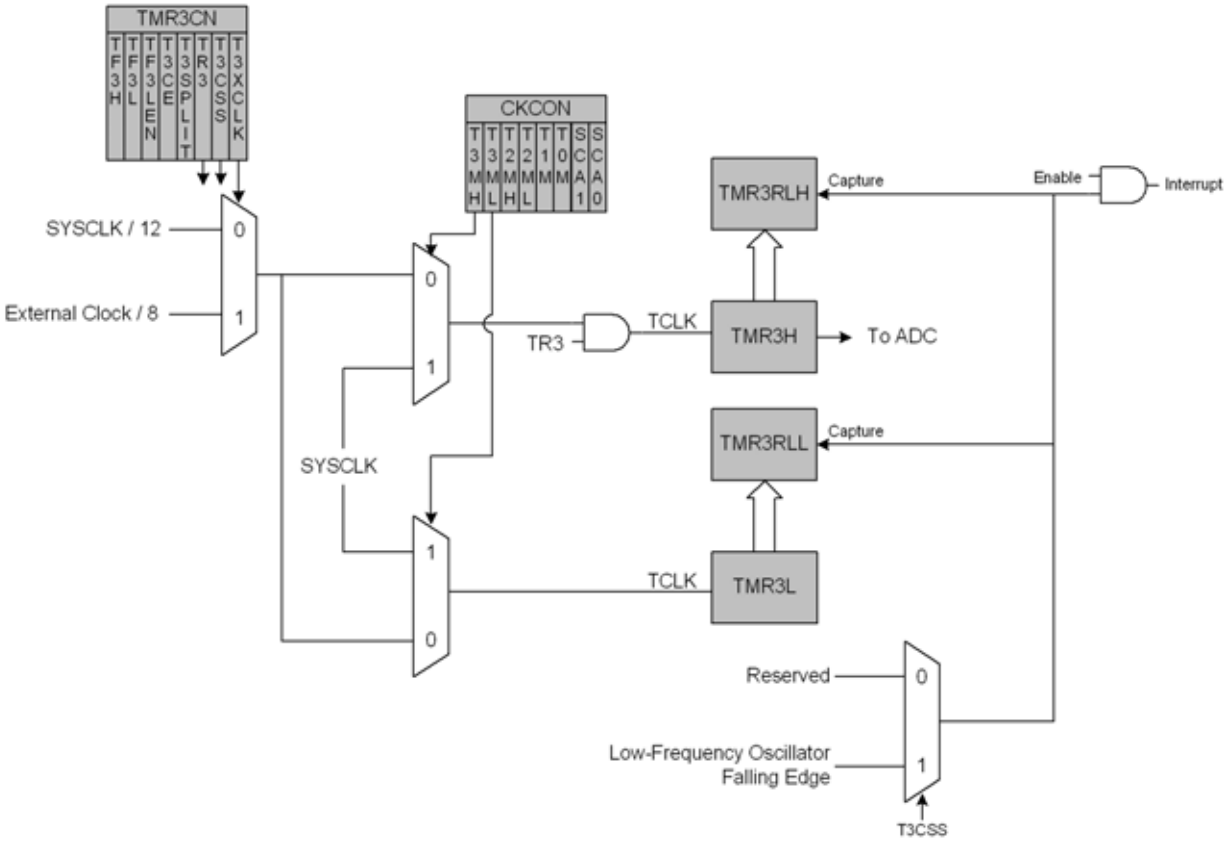

Figure 25.11. Timer 3 Capture Mode (T3SPLIT = 0)

SFR Definition 25.14. TMR3CN: Timer 3 Control

Bit	7	6	5	4	3	2	1	0
Name	TF3H	TF3L	TF3LEN	TF3CEN	T3SPLIT	TR3	T3CSS	T3XCLK
Type	R/W	R/W	R/W	R/W	R/W	R/W	R/W	R/W
Reset	0	0	0	0	0	0	0	0

SFR Address = 0x91; SFR Page = 0

Bit	Name	Function
7	TF3H	**Timer 3 High Byte Overflow Flag.** Set by hardware when the Timer 3 high byte overflows from 0xFF to 0x00. In 16 bit mode, this will occur when Timer 3 overflows from 0xFFFF to 0x0000. When the Timer 3 interrupt is enabled, setting this bit causes the CPU to vector to the Timer 3 interrupt service routine. This bit is not automatically cleared by hardware.
6	TF3L	**Timer 3 Low Byte Overflow Flag.** Set by hardware when the Timer 3 low byte overflows from 0xFF to 0x00. TF3L will be set when the low byte overflows regardless of the Timer 3 mode. This bit is not automatically cleared by hardware.
5	TF3LEN	**Timer 3 Low Byte Interrupt Enable.** When set to 1, this bit enables Timer 3 Low Byte interrupts. If Timer 3 interrupts are also enabled, an interrupt will be generated when the low byte of Timer 3 overflows.
4	TF3CEN	**Timer 3 Low-Frequency Oscillator Capture Enable.** When set to 1, this bit enables Timer 3 Low-Frequency Oscillator Capture Mode. If TF3CEN is set and Timer 3 interrupts are enabled, an interrupt will be generated on a falling edge of the low-frequency oscillator output, and the current 16-bit timer value in TMR3H:TMR3L will be copied to TMR3RLH:TMR3RLL.
3	T3SPLIT	**Timer 3 Split Mode Enable.** When this bit is set, Timer 3 operates as two 8-bit timers with auto-reload.
2	TR3	**Timer 3 Run Control.** Timer 3 is enabled by setting this bit to 1. In 8-bit mode, this bit enables/disables TMR3H only; TMR3L is always enabled in split mode.
1	T3CSS	**Timer 3 Capture Source Select.** This bit selects the source of a capture event when bit T2CE is set to 1. 0: Reserved. 1: Capture source is falling edge of Low-Frequency Oscillator.
0	T3XCLK	**Timer 3 External Clock Select.** This bit selects the external clock source for Timer 3. However, the Timer 3 Clock Select bits (T3MH and T3ML in register CKCON) may still be used to select between the external clock and the system clock for either timer. 0: Timer 3 clock is the system clock divided by 12. 1: Timer 3 clock is the external clock divided by 8 (synchronized with SYSCLK).

SFR Definition 25.15. TMR3RLL: Timer 3 Reload Register Low Byte

Bit	7	6	5	4	3	2	1	0
Name	TMR3RLL[7:0]							
Type	R/W							
Reset	0	0	0	0	0	0	0	0

SFR Address = 0x92; SFR Page = 0

Bit	Name	Function
7:0	TMR3RLL[7:0]	**Timer 3 Reload Register Low Byte.** TMR3RLL holds the low byte of the reload value for Timer 3.

SFR Definition 25.16. TMR3RLH: Timer 3 Reload Register High Byte

Bit	7	6	5	4	3	2	1	0
Name	TMR3RLH[7:0]							
Type	R/W							
Reset	0	0	0	0	0	0	0	0

SFR Address = 0x93; SFR Page = 0

Bit	Name	Function
7:0	TMR3RLH[7:0]	**Timer 3 Reload Register High Byte.** TMR3RLH holds the high byte of the reload value for Timer 3.

SFR Definition 25.17. TMR3L: Timer 3 Low Byte

Bit	7	6	5	4	3	2	1	0
Name	TMR3L[7:0]							
Type	R/W							
Reset	0	0	0	0	0	0	0	0

SFR Address = 0x94; SFR Page = 0

Bit	Name	Function
7:0	TMR3L[7:0]	**Timer 3 Low Byte.** In 16-bit mode, the TMR3L register contains the low byte of the 16-bit Timer 3. In 8-bit mode, TMR3L contains the 8-bit low byte timer value.

SFR Definition 25.18. TMR3H Timer 3 High Byte

Bit	7	6	5	4	3	2	1	0
Name	TMR3H[7:0]							
Type	R/W							
Reset	0	0	0	0	0	0	0	0

SFR Address = 0x95; SFR Page = 0

Bit	Name	Function
7:0	TMR3H[7:0]	**Timer 3 High Byte.** In 16-bit mode, the TMR3H register contains the high byte of the 16-bit Timer 3. In 8-bit mode, TMR3H contains the 8-bit high byte timer value.

25.4. Timer 4

Timer 4 is a 16-bit timer formed by two 8-bit SFRs: TMR4L (low byte) and TMR4H (high byte). Timer 4 may operate in 16-bit auto-reload mode or (split) 8-bit auto-reload mode. The T4SPLIT bit (TMR4CN.3) defines

Timer 4 may be clocked by the system clock, the system clock divided by 12, or the external oscillator source divided by 8. Note that the external oscillator source divided by 8 is synchronized with the system clock.

25.4.1. 16-bit Timer with Auto-Reload

When T4SPLIT (TMR4CN.3) is zero, Timer 4 operates as a 16-bit timer with auto-reload. Timer 4 can be clocked by SYSCLK, SYSCLK divided by 12, or the external oscillator clock source divided by 8. As the 16-bit timer register increments and overflows from 0xFFFF to 0x0000, the 16-bit value in the Timer 4 reload registers (TMR4RLH and TMR4RLL) is loaded into the Timer 4 register as shown in Figure 25.12, and the Timer 4 High Byte Overflow Flag (TMR4CN.7) is set. If Timer 4 interrupts are enabled (if EIE1.7 is set), an interrupt will be generated on each Timer 4 overflow. Additionally, if Timer 4 interrupts are enabled and the TF4LEN bit is set (TMR4CN.5), an interrupt will be generated each time the lower 8 bits (TMR4L) overflow from 0xFF to 0x00.

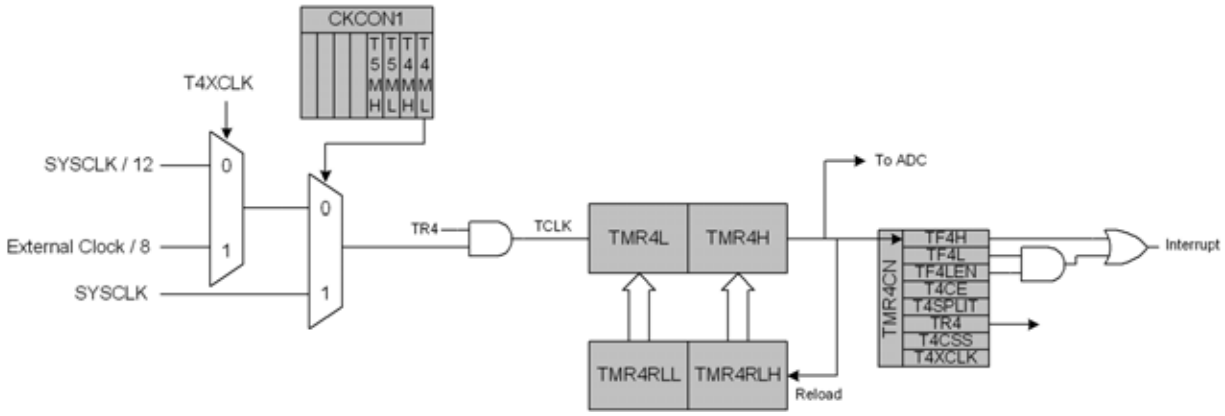

Figure 25.12. Timer 4 16-Bit Mode Block Diagram

25.4.2. 8-bit Timers with Auto-Reload

When T4SPLIT is 1 and T4CE = 0, Timer 4 operates as two 8-bit timers (TMR4H and TMR4L). Both 8-bit timers operate in auto-reload mode as shown in Figure 25.13. TMR4RLL holds the reload value for TMR4L; TMR4RLH holds the reload value for TMR4H. The TR4 bit in TMR4CN handles the run control for TMR4H. TMR4L is always running when configured for 8-bit Mode.

Each 8-bit timer may be configured to use SYSCLK, SYSCLK divided by 12, or the external oscillator clock source divided by 8. The Timer 4 Clock Select bits (T4MH and T4ML in CKCON1) select either SYSCLK or the clock defined by the Timer 4 External Clock Select bit (T4XCLK in TMR4CN), as follows:

T4MH	T4XCLK	TMR4H Clock Source
0	0	SYSCLK/12
0	1	External Clock/8
1	X	SYSCLK

T4ML	T4XCLK	TMR4L Clock Source
0	0	SYSCLK/12
0	1	External Clock/8
1	X	SYSCLK

The TF4H bit is set when TMR4H overflows from 0xFF to 0x00; the TF4L bit is set when TMR4L overflows from 0xFF to 0x00. When Timer 4 interrupts are enabled, an interrupt is generated each time TMR4H overflows. If Timer 4 interrupts are enabled and TF4LEN (TMR4CN.5) is set, an interrupt is generated each time either TMR4L or TMR4H overflows. When TF4LEN is enabled, software must check the TF4H and TF4L flags to determine the source of the Timer 4 interrupt. The TF4H and TF4L interrupt flags are not cleared by hardware and must be manually cleared by software.

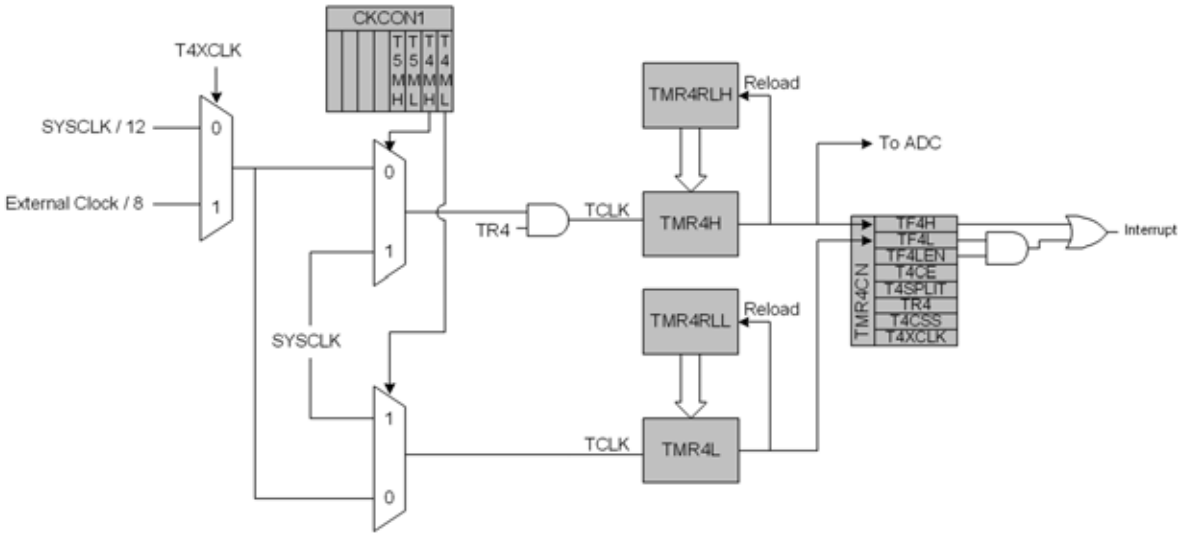

Figure 25.13. Timer 4 8-Bit Mode Block Diagram

SFR Definition 25.19. TMR4CN: Timer 4 Control

Bit	7	6	5	4	3	2	1	0
Name	TF4H	TF4L	TF4LEN		T4SPLIT	TR4		T4XCLK
Type	R/W	R/W	R/W	R	R/W	R/W	R	R/W
Reset	0	0	0	0	0	0	0	0

SFR Address = 0x91; SFR Page = F

Bit	Name	Function
7	TF4H	**Timer 4 High Byte Overflow Flag.** Set by hardware when the Timer 4 high byte overflows from 0xFF to 0x00. In 16 bit mode, this will occur when Timer 4 overflows from 0xFFFF to 0x0000. When the Timer 4 interrupt is enabled, setting this bit causes the CPU to vector to the Timer 4 interrupt service routine. This bit is not automatically cleared by hardware.
6	TF4L	**Timer 4 Low Byte Overflow Flag.** Set by hardware when the Timer 4 low byte overflows from 0xFF to 0x00. TF4L will be set when the low byte overflows regardless of the Timer 4 mode. This bit is not automatically cleared by hardware.
5	TF4LEN	**Timer 4 Low Byte Interrupt Enable.** When set to 1, this bit enables Timer 4 Low Byte interrupts. If Timer 4 interrupts are also enabled, an interrupt will be generated when the low byte of Timer 4 overflows.
4	Unused	Read = 0b; Write = don't care.
3	T4SPLIT	**Timer 4 Split Mode Enable.** When this bit is set, Timer 4 operates as two 8-bit timers with auto-reload. 0: Timer 4 operates in 16-bit auto-reload mode. 1: Timer 4 operates as two 8-bit auto-reload timers.
2	TR4	**Timer 4 Run Control.** Timer 4 is enabled by setting this bit to 1. In 8-bit mode, this bit enables/disables TMR4H only; TMR4L is always enabled in split mode.
1	Unused	Read = 0b; Write = don't care.
0	T4XCLK	**Timer 4 External Clock Select.** This bit selects the external clock source for Timer 4. However, the Timer 4 Clock Select bits (T4MH and T4ML in register CKCON1) may still be used to select between the external clock and the system clock for either timer. 0: Timer 4 clock is the system clock divided by 12. 1: Timer 4 clock is the external clock divided by 8 (synchronized with SYSCLK).

SFR Definition 25.20. TMR4RLL: Timer 4 Reload Register Low Byte

Bit	7	6	5	4	3	2	1	0
Name	TMR4RLL[7:0]							
Type	R/W							
Reset	0	0	0	0	0	0	0	0

SFR Address = 0x92; SFR Page = F

Bit	Name	Function
7:0	TMR4RLL[7:0]	**Timer 4 Reload Register Low Byte.** TMR4RLL holds the low byte of the reload value for Timer 4.

SFR Definition 25.21. TMR4RLH: Timer 4 Reload Register High Byte

Bit	7	6	5	4	3	2	1	0
Name	TMR4RLH[7:0]							
Type	R/W							
Reset	0	0	0	0	0	0	0	0

SFR Address = 0x93; SFR Page = F

Bit	Name	Function
7:0	TMR4RLH[7:0]	**Timer 4 Reload Register High Byte.** TMR4RLH holds the high byte of the reload value for Timer 4.

SFR Definition 25.22. TMR4L: Timer 4 Low Byte

Bit	7	6	5	4	3	2	1	0
Name	TMR4L[7:0]							
Type	R/W							
Reset	0	0	0	0	0	0	0	0

SFR Address = 0x94; SFR Page = F

Bit	Name	Function
7:0	TMR4L[7:0]	**Timer 4 Low Byte.** In 16-bit mode, the TMR4L register contains the low byte of the 16-bit Timer 4. In 8-bit mode, TMR4L contains the 8-bit low byte timer value.

SFR Definition 25.23. TMR4H Timer 4 High Byte

Bit	7	6	5	4	3	2	1	0
Name	TMR4H[7:0]							
Type	R/W							
Reset	0	0	0	0	0	0	0	0

SFR Address = 0x95; SFR Page = F

Bit	Name	Function
7:0	TMR4H[7:0]	**Timer 4 High Byte.** In 16-bit mode, the TMR4H register contains the high byte of the 16-bit Timer 4. In 8-bit mode, TMR4H contains the 8-bit high byte timer value.

25.5. Timer 5

Timer 5 is a 16-bit timer formed by two 8-bit SFRs: TMR5L (low byte) and TMR5H (high byte). Timer 5 may operate in 16-bit auto-reload mode or (split) 8-bit auto-reload mode. The T5SPLIT bit (TMR5CN.3) defines

Timer 5 may be clocked by the system clock, the system clock divided by 12, or the external oscillator source divided by 8. Note that the external oscillator source divided by 8 is synchronized with the system clock.

25.5.1. 16-bit Timer with Auto-Reload

When T5SPLIT (TMR5CN.3) is zero, Timer 5 operates as a 16-bit timer with auto-reload. Timer 5 can be clocked by SYSCLK, SYSCLK divided by 12, or the external oscillator clock source divided by 8. As the 16-bit timer register increments and overflows from 0xFFFF to 0x0000, the 16-bit value in the Timer 5 reload registers (TMR5RLH and TMR5RLL) is loaded into the Timer 5 register as shown in Figure 25.14, and the Timer 5 High Byte Overflow Flag (TMR5CN.7) is set. If Timer 5 interrupts are enabled (if EIE1.7 is set), an interrupt will be generated on each Timer 5 overflow. Additionally, if Timer 5 interrupts are enabled and the TF5LEN bit is set (TMR5CN.5), an interrupt will be generated each time the lower 8 bits (TMR5L) overflow from 0xFF to 0x00.

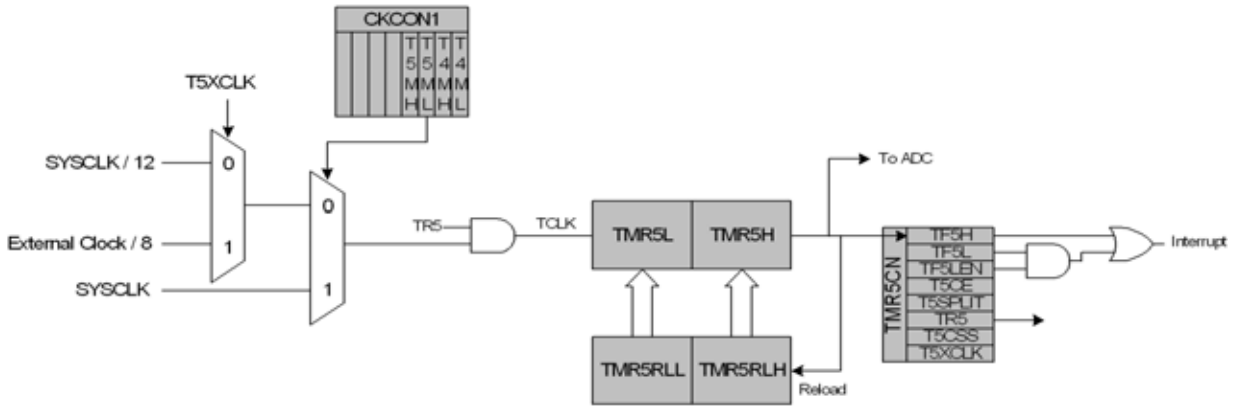

Figure 25.14. Timer 5 16-Bit Mode Block Diagram

25.5.2. 8-bit Timers with Auto-Reload

When T5SPLIT is 1 and T5CE = 0, Timer 5 operates as two 8-bit timers (TMR5H and TMR5L). Both 8-bit timers operate in auto-reload mode as shown in Figure 25.15. TMR5RLL holds the reload value for TMR5L; TMR5RLH holds the reload value for TMR5H. The TR5 bit in TMR5CN handles the run control for TMR5H. TMR5L is always running when configured for 8-bit Mode.

Each 8-bit timer may be configured to use SYSCLK, SYSCLK divided by 12, or the external oscillator clock source divided by 8. The Timer 5 Clock Select bits (T5MH and T5ML in CKCON1) select either SYSCLK or the clock defined by the Timer 5 External Clock Select bit (T5XCLK in TMR5CN), as follows:

T5MH	T5XCLK	TMR5H Clock Source
0	0	SYSCLK/12
0	1	External Clock/8
1	X	SYSCLK

T5ML	T5XCLK	TMR5L Clock Source
0	0	SYSCLK/12
0	1	External Clock/8
1	X	SYSCLK

The TF5H bit is set when TMR5H overflows from 0xFF to 0x00; the TF5L bit is set when TMR5L overflows from 0xFF to 0x00. When Timer 5 interrupts are enabled, an interrupt is generated each time TMR5H overflows. If Timer 5 interrupts are enabled and TF5LEN (TMR5CN.5) is set, an interrupt is generated each time either TMR5L or TMR5H overflows. When TF5LEN is enabled, software must check the TF5H and TF5L flags to determine the source of the Timer 5 interrupt. The TF5H and TF5L interrupt flags are not cleared by hardware and must be manually cleared by software.

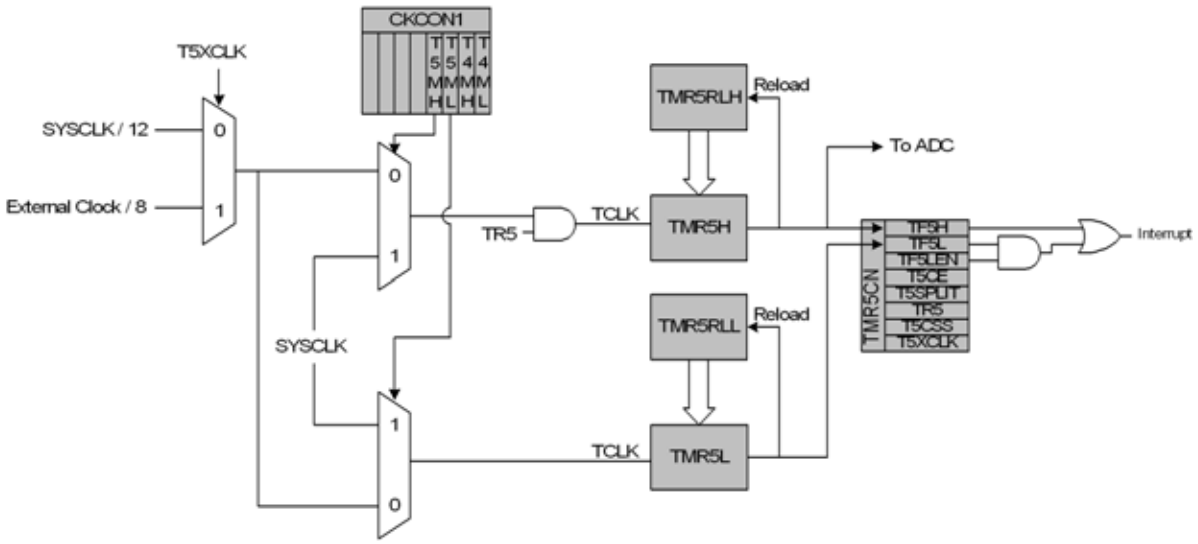

Figure 25.15. Timer 5 8-Bit Mode Block Diagram

SFR Definition 25.24. TMR5CN: Timer 5 Control

Bit	7	6	5	4	3	2	1	0
Name	TF5H	TF5L	TF5LEN		T5SPLIT	TR5		T5XCLK
Type	R/W	R/W	R/W	R	R/W	R/W	R	R/W
Reset	0	0	0	0	0	0	0	0

SFR Address = 0xC8; SFR Page = F; Bit-Addressable

Bit	Name	Function
7	TF5H	**Timer 5 High Byte Overflow Flag.** Set by hardware when the Timer 5 high byte overflows from 0xFF to 0x00. In 16 bit mode, this will occur when Timer 5 overflows from 0xFFFF to 0x0000. When the Timer 5 interrupt is enabled, setting this bit causes the CPU to vector to the Timer 5 interrupt service routine. This bit is not automatically cleared by hardware.
6	TF5L	**Timer 5 Low Byte Overflow Flag.** Set by hardware when the Timer 5 low byte overflows from 0xFF to 0x00. TF5L will be set when the low byte overflows regardless of the Timer 5 mode. This bit is not automatically cleared by hardware.
5	TF5LEN	**Timer 5 Low Byte Interrupt Enable.** When set to 1, this bit enables Timer 5 Low Byte interrupts. If Timer 5 interrupts are also enabled, an interrupt will be generated when the low byte of Timer 5 overflows.
4	Unused	Read = 0b; Write = don't care.
3	T5SPLIT	**Timer 5 Split Mode Enable.** When this bit is set, Timer 5 operates as two 8-bit timers with auto-reload. 0: Timer 5 operates in 16-bit auto-reload mode. 1: Timer 5 operates as two 8-bit auto-reload timers.
2	TR5	**Timer 5 Run Control.** Timer 5 is enabled by setting this bit to 1. In 8-bit mode, this bit enables/disables TMR5H only; TMR5L is always enabled in split mode.
1	Unused	Read = 0b; Write = don't care.
0	T5XCLK	**Timer 5 External Clock Select.** This bit selects the external clock source for Timer 5. However, the Timer 5 Clock Select bits (T5MH and T5ML in register CKCON1) may still be used to select between the external clock and the system clock for either timer. 0: Timer 5 clock is the system clock divided by 12. 1: Timer 5 clock is the external clock divided by 8 (synchronized with SYSCLK).

SFR Definition 25.25. TMR5RLL: Timer 5 Reload Register Low Byte

Bit	7	6	5	4	3	2	1	0
Name	TMR5RLL[7:0]							
Type	R/W							
Reset	0	0	0	0	0	0	0	0

SFR Address = 0xCA; SFR Page = F

Bit	Name	Function
7:0	TMR5RLL[7:0]	**Timer 5 Reload Register Low Byte.** TMR5RLL holds the low byte of the reload value for Timer 5.

SFR Definition 25.26. TMR5RLH: Timer 5 Reload Register High Byte

Bit	7	6	5	4	3	2	1	0
Name	TMR5RLH[7:0]							
Type	R/W							
Reset	0	0	0	0	0	0	0	0

SFR Address = 0xCB; SFR Page = F

Bit	Name	Function
7:0	TMR5RLH[7:0]	**Timer 5 Reload Register High Byte.** TMR5RLH holds the high byte of the reload value for Timer 5.

SFR Definition 25.27. TMR5L: Timer 5 Low Byte

Bit	7	6	5	4	3	2	1	0
Name	TMR5L[7:0]							
Type	R/W							
Reset	0	0	0	0	0	0	0	0

SFR Address = 0xCC; SFR Page = F

Bit	Name	Function
7:0	TMR5L[7:0]	**Timer 5 Low Byte.** In 16-bit mode, the TMR5L register contains the low byte of the 16-bit Timer 5. In 8-bit mode, TMR5L contains the 8-bit low byte timer value.

SFR Definition 25.28. TMR5H Timer 5 High Byte

Bit	7	6	5	4	3	2	1	0
Name	TMR5H[7:0]							
Type	R/W							
Reset	0	0	0	0	0	0	0	0

SFR Address = 0xCD; SFR Page = F

Bit	Name	Function
7:0	TMR5H[7:0]	**Timer 5 High Byte.** In 16-bit mode, the TMR5H register contains the high byte of the 16-bit Timer 5. In 8-bit mode, TMR5H contains the 8-bit high byte timer value.

26. Programmable Counter Array

The Programmable Counter Array (PCA0) provides enhanced timer functionality while requiring less CPU intervention than the standard 8051 counter/timers. The PCA consists of a dedicated 16-bit counter/timer and five 16-bit capture/compare modules. Each capture/compare module has its own associated I/O line (CEXn) which is routed through the Crossbar to Port I/O when enabled. The counter/timer is driven by a programmable timebase that can select between six sources: system clock, system clock divided by four, system clock divided by twelve, the external oscillator clock source divided by 8, Timer 0 overflows, or an external clock signal on the ECI input pin. Each capture/compare module may be configured to operate independently in one of six modes: Edge-Triggered Capture, Software Timer, High-Speed Output, Frequency Output, 8-Bit PWM, or 16-Bit PWM (each mode is described in Section “26.3. Capture/Compare Modules” on page 262). The external oscillator clock option is ideal for real-time clock (RTC) functionality, allowing the PCA to be clocked by a precision external oscillator while the internal oscillator drives the system clock. The PCA is configured and controlled through the system controller's Special Function Registers. The PCA block diagram is shown in Figure 26.1

Important Note: The PCA Module 4 may be used as a watchdog timer (WDT), and is enabled in this mode following a system reset. **Access to certain PCA registers is restricted while WDT mode is enabled**. See Section 26.4 for details.

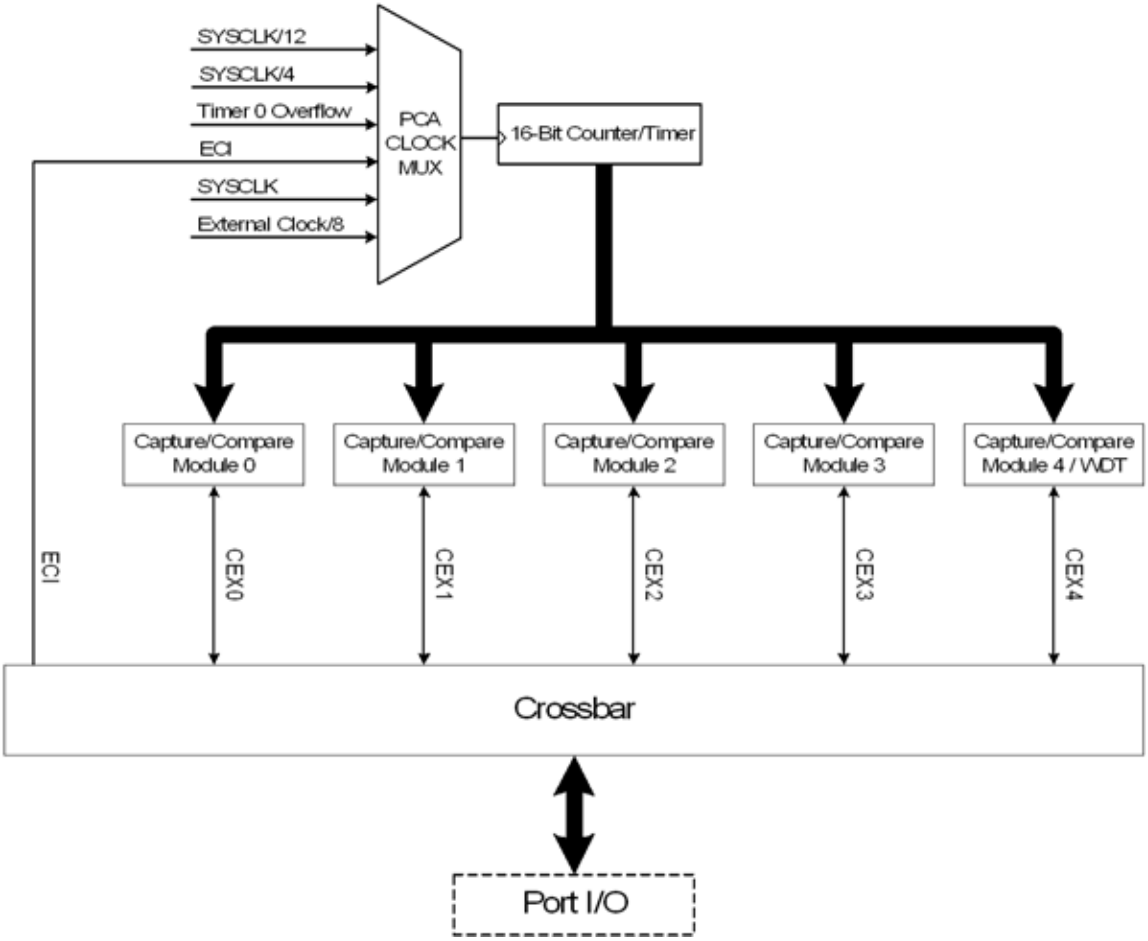

Figure 26.1. PCA Block Diagram

26.1. PCA Counter/Timer

The 16-bit PCA counter/timer consists of two 8-bit SFRs: PCA0L and PCA0H. PCA0H is the high byte (MSB) of the 16-bit counter/timer and PCA0L is the low byte (LSB). Reading PCA0L automatically latches the value of PCA0H into a “snapshot” register; the following PCA0H read accesses this “snapshot” register. **Reading the PCA0L register first guarantees an accurate reading of the entire 16-bit PCA0 counter.** Reading PCA0H or PCA0L does not disturb the counter operation. The CPS2–CPS0 bits in the PCA0MD register select the timebase for the counter/timer as shown in Table 26.1.

When the counter/timer overflows from 0xFFFF to 0x0000, the Counter Overflow Flag (CF) in PCA0MD is set to logic 1 and an interrupt request is generated if CF interrupts are enabled. Setting the ECF bit in PCA0MD to logic 1 enables the CF flag to generate an interrupt request. The CF bit is not automatically cleared by hardware when the CPU vectors to the interrupt service routine, and must be cleared by software. Clearing the CIDL bit in the PCA0MD register allows the PCA to continue normal operation while the CPU is in Idle mode.

Table 26.1. PCA Timebase Input Options

CPS2	CPS1	CPS0	Timebase
0	0	0	System clock divided by 12
0	0	1	System clock divided by 4
0	1	0	Timer 0 overflow
0	1	1	High-to-low transitions on ECI (max rate = system clock divided by 4)
1	0	0	System clock
1	0	1	External oscillator source divided by 8*
1	1	x	Reserved
Note: External oscillator source divided by 8 is synchronized with the system clock.			

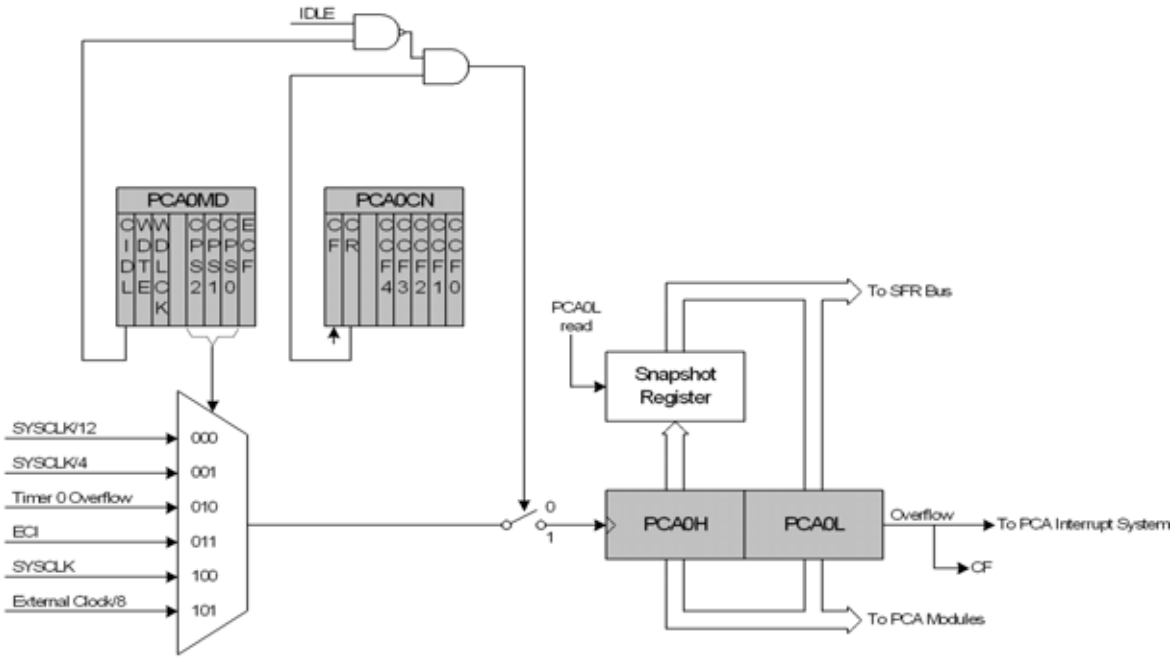

Figure 26.2. PCA Counter/Timer Block Diagram

26.2. PCA0 Interrupt Sources

Figure 26.3 shows a diagram of the PCA interrupt tree. There are six independent event flags that can be used to generate a PCA0 interrupt. They are: the main PCA counter overflow flag (CF), which is set upon a 16-bit overflow of the PCA0 counter and the individual flags for each PCA channel (CCF0, CCF1, CCF2, CCF3, and CCF4), which are set according to the operation mode of that module. These event flags are always set when the trigger condition occurs. Each of these flags can be individually selected to generate a PCA0 interrupt, using the corresponding interrupt enable flag (ECF for CF, and ECCFn for each CCFn). PCA0 interrupts must be globally enabled before any individual interrupt sources are recognized by the processor. PCA0 interrupts are globally enabled by setting the EA bit and the EPCA0 bit to logic 1.

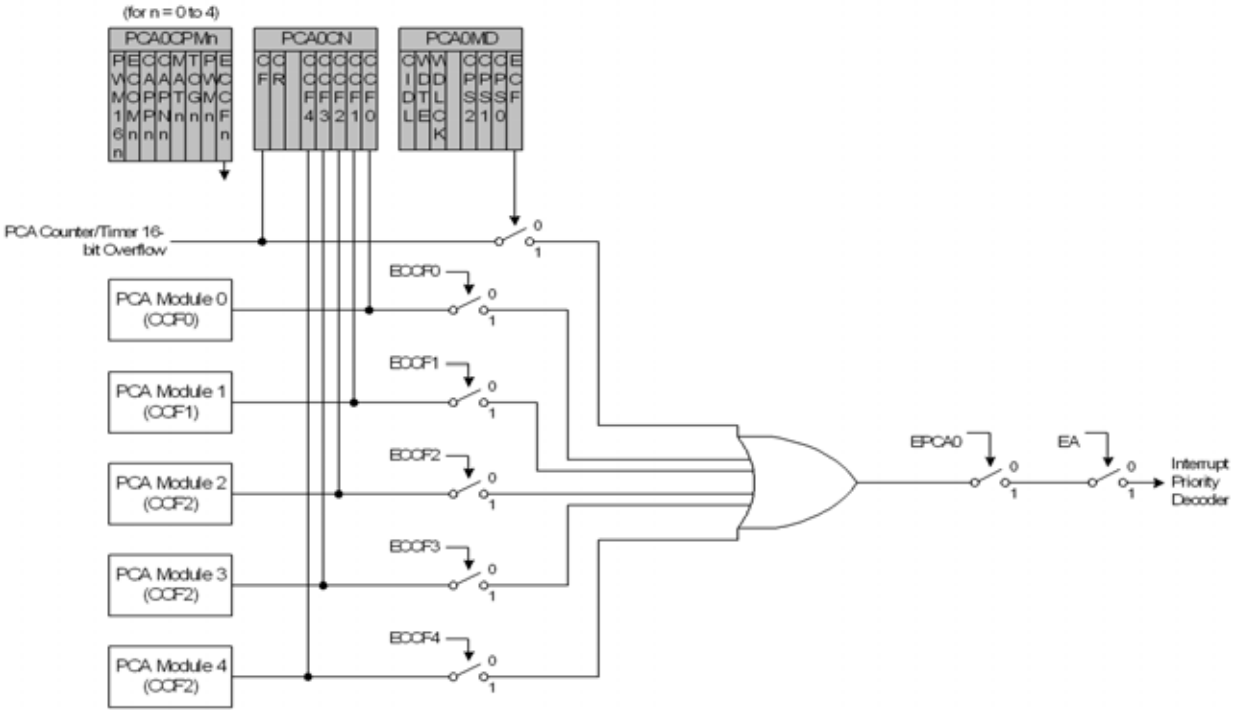

Figure 26.3. PCA Interrupt Block Diagram

26.3. Capture/Compare Modules

Each module can be configured to operate independently in one of six operation modes: edge-triggered capture, software timer, high-speed output, frequency output, 8-bit pulse width modulator, or 16-bit pulse width modulator. Each module has Special Function Registers (SFRs) associated with it in the CIP-51 system controller. These registers are used to exchange data with a module and configure the module's mode of operation. Table 26.2 summarizes the bit settings in the PCA0CPMn register used to select the PCA capture/compare module's operating mode. Setting the ECCFn bit in a PCA0CPMn register enables the module's CCFn interrupt.

Table 26.2. PCA0CPM Bit Settings for PCA Capture/Compare Modules

Operational Mode	**PCA0CPMn**							
Bit Number	7	6	5	4	3	2	1	0
Capture triggered by positive edge on CEXn	X	X	1	0	0	0	0	A
Capture triggered by negative edge on CEXn	X	X	0	1	0	0	0	A
Capture triggered by any transition on CEXn	X	X	1	1	0	0	0	A
Software Timer	X	B	0	0	1	0	0	A
High Speed Output	X	B	0	0	1	1	0	A
Frequency Output	X	B	0	0	0	1	1	A
8-Bit Pulse Width Modulator	0	B	0	0	C	0	1	A
16-Bit Pulse Width Modulator	1	B	0	0	C	0	1	A

Notes:
1. X = Don't Care (no functional difference for individual module if 1 or 0).
2. A = Enable interrupts for this module (PCA interrupt triggered on CCFn set to 1).
3. B = When set to 0, the digital comparator is off. For high speed and frequency output modes, the associated pin will not toggle. In any of the PWM modes, this generates a 0% duty cycle (output = 0).
4. C = When set, a match event will cause the CCFn flag for the associated channel to be set.

26.3.1. Edge-triggered Capture Mode

In this mode, a valid transition on the CEXn pin causes the PCA to capture the value of the PCA counter/timer and load it into the corresponding module's 16-bit capture/compare register (PCA0CPLn and PCA0CPHn). The CAPPn and CAPNn bits in the PCA0CPMn register are used to select the type of transition that triggers the capture: low-to-high transition (positive edge), high-to-low transition (negative edge), or either transition (positive or negative edge). When a capture occurs, the Capture/Compare Flag (CCFn) in PCA0CN is set to logic 1. An interrupt request is generated if the CCFn interrupt for that module is enabled. The CCFn bit is not automatically cleared by hardware when the CPU vectors to the interrupt service routine, and must be cleared by software. If both CAPPn and CAPNn bits are set to logic 1, then the state of the Port pin associated with CEXn can be read directly to determine whether a rising-edge or falling-edge caused the capture.

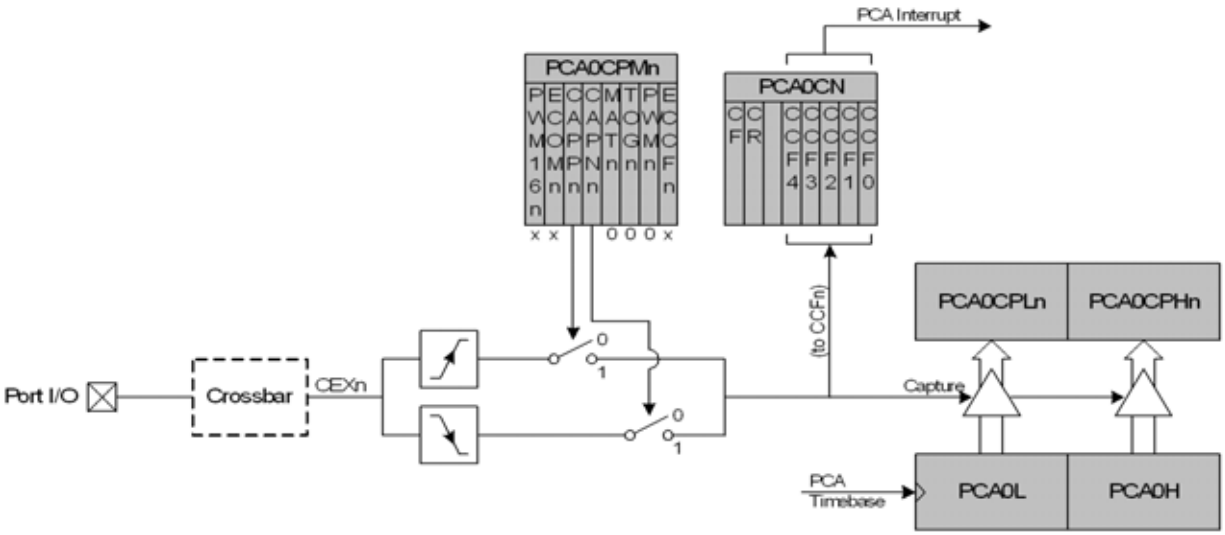

Figure 26.4. PCA Capture Mode Diagram

Note: The CEXn input signal must remain high or low for at least 2 system clock cycles to be recognized by the hardware.

26.3.2. Software Timer (Compare) Mode

In Software Timer mode, the PCA counter/timer value is compared to the module's 16-bit capture/compare register (PCA0CPHn and PCA0CPLn). When a match occurs, the Capture/Compare Flag (CCFn) in PCA0CN is set to logic 1. An interrupt request is generated if the CCFn interrupt for that module is enabled. The CCFn bit is not automatically cleared by hardware when the CPU vectors to the interrupt service routine, and must be cleared by software. Setting the ECOMn and MATn bits in the PCA0CPMn register enables Software Timer mode.

Important Note About Capture/Compare Registers: When writing a 16-bit value to the PCA0 Capture/Compare registers, the low byte should always be written first. Writing to PCA0CPLn clears the ECOMn bit to 0; writing to PCA0CPHn sets ECOMn to 1.

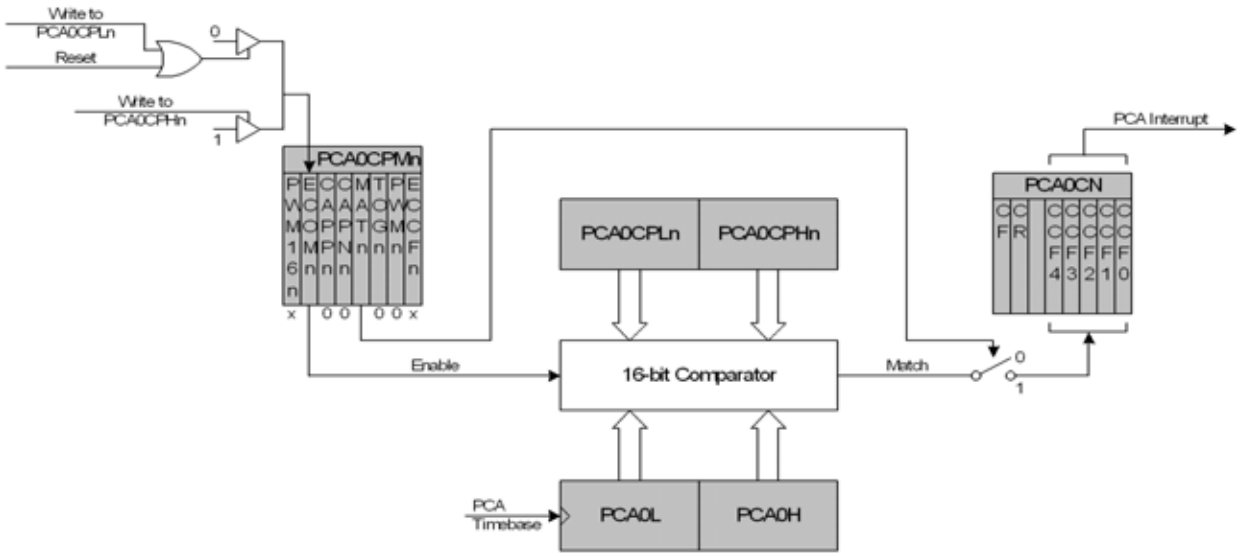

Figure 26.5. PCA Software Timer Mode Diagram

26.3.3. High-Speed Output Mode

In High-Speed Output mode, a module's associated CEXn pin is toggled each time a match occurs between the PCA Counter and the module's 16-bit capture/compare register (PCA0CPHn and PCA0CPLn). When a match occurs, the Capture/Compare Flag (CCFn) in PCA0CN is set to logic 1. An interrupt request is generated if the CCFn interrupt for that module is enabled. The CCFn bit is not automatically cleared by hardware when the CPU vectors to the interrupt service routine, and must be cleared by software. Setting the TOGn, MATn, and ECOMn bits in the PCA0CPMn register enables the High-Speed Output mode. If ECOMn is cleared, the associated pin will retain its state, and not toggle on the next match event.

Important Note About Capture/Compare Registers: When writing a 16-bit value to the PCA0 Capture/Compare registers, the low byte should always be written first. Writing to PCA0CPLn clears the ECOMn bit to 0; writing to PCA0CPHn sets ECOMn to 1.

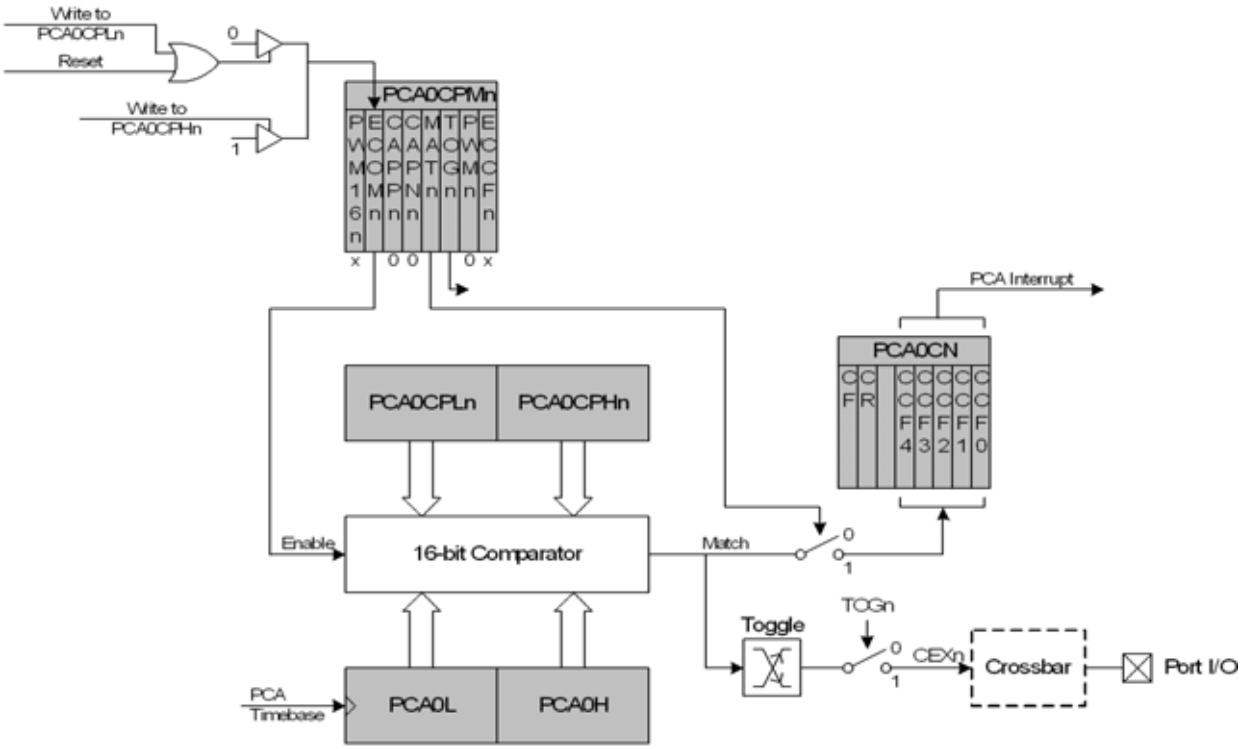

Figure 26.6. PCA High-Speed Output Mode Diagram

26.3.4. Frequency Output Mode

Frequency Output Mode produces a programmable-frequency square wave on the module's associated CEXn pin. The capture/compare module high byte holds the number of PCA clocks to count before the output is toggled. The frequency of the square wave is then defined by Equation 26.1.

$$F_{CEXn} = \frac{F_{PCA}}{2 \times PCA0CPHn}$$

Note: A value of 0x00 in the PCA0CPHn register is equal to 256 for this equation.

Equation 26.1. Square Wave Frequency Output

Where F_{PCA} is the frequency of the clock selected by the CPS2–0 bits in the PCA mode register, PCA0MD. The lower byte of the capture/compare module is compared to the PCA counter low byte; on a match, CEXn is toggled and the offset held in the high byte is added to the matched value in PCA0CPLn. Frequency Output Mode is enabled by setting the ECOMn, TOGn, and PWMn bits in the PCA0CPMn register. Note that the MATn bit should normally be set to 0 in this mode. If the MATn bit is set to 1, the CCFn flag for the channel will be set when the 16-bit PCA0 counter and the 16-bit capture/compare register for the channel are equal.

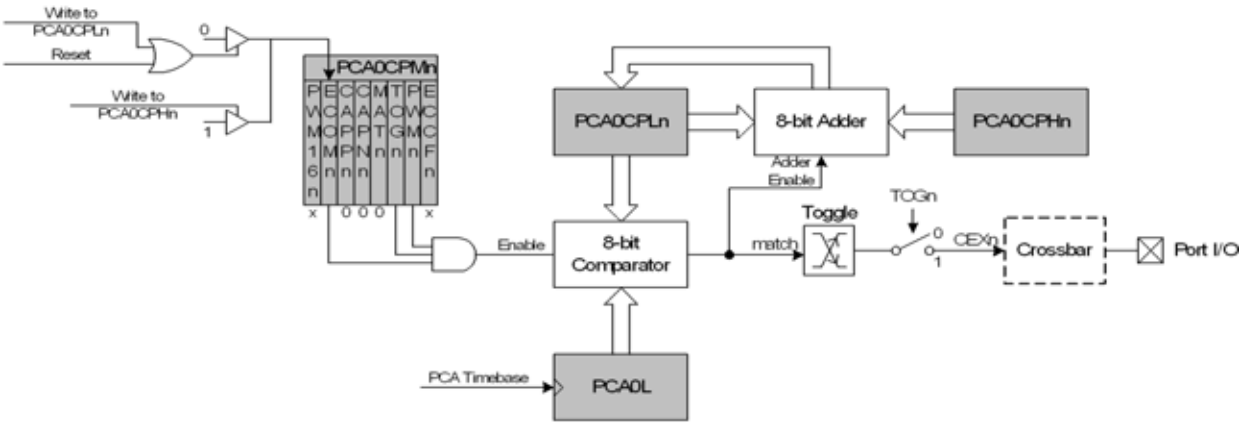

Figure 26.7. PCA Frequency Output Mode

26.3.5. 8-bit Pulse Width Modulator Mode

The duty cycle of the PWM output signal in 8-bit PWM mode is varied using the module's PCA0CPLn capture/compare register. When the value in the low byte of the PCA counter/timer (PCA0L) is equal to the value in PCA0CPLn, the output on the CEXn pin will be set. When the count value in PCA0L overflows, the CEXn output will be reset (see Figure 26.8). Also, when the counter/timer low byte (PCA0L) overflows from 0xFF to 0x00, PCA0CPLn is reloaded automatically with the value stored in the module's capture/compare high byte (PCA0CPHn) without software intervention. Setting the ECOMn and PWMn bits in the PCA0CPMn register enables 8-Bit Pulse Width Modulator mode. If the MATn bit is set to 1, the CCFn flag for the module will be set each time an 8-bit comparator match (rising edge) occurs. The duty cycle for 8-Bit PWM Mode is given in Equation 26.2.

Important Note About Capture/Compare Registers: When writing a 16-bit value to the PCA0 Capture/Compare registers, the low byte should always be written first. Writing to PCA0CPLn clears the ECOMn bit to 0; writing to PCA0CPHn sets ECOMn to 1.

$$\text{Duty Cycle} = \frac{(256 - \text{PCA0CPHn})}{256}$$

Equation 26.2. 8-Bit PWM Duty Cycle

Using Equation 26.2, the largest duty cycle is 100% (PCA0CPHn = 0), and the smallest duty cycle is 0.39% (PCA0CPHn = 0xFF). A 0% duty cycle may be generated by clearing the ECOMn bit to 0.

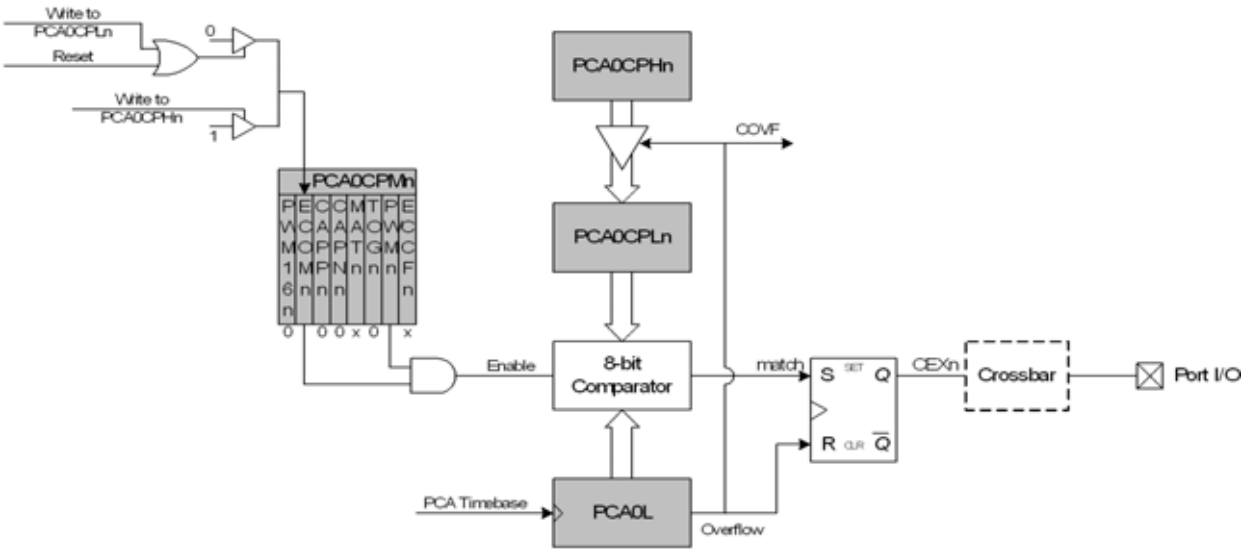

Figure 26.8. PCA 8-Bit PWM Mode Diagram

26.3.6. 16-Bit Pulse Width Modulator Mode

A PCA module may also be operated in 16-Bit PWM mode. In this mode, the 16-bit capture/compare module defines the number of PCA clocks for the low time of the PWM signal. When the PCA counter matches the module contents, the output on CEXn is asserted high; when the 16-bit counter overflows, CEXn is asserted low. To output a varying duty cycle, new value writes should be synchronized with PCA CCFn match interrupts. 16-Bit PWM Mode is enabled by setting the ECOMn, PWMn, and PWM16n bits in the PCA0CPMn register. For a varying duty cycle, match interrupts should be enabled (ECCFn = 1 AND MATn = 1) to help synchronize the capture/compare register writes. If the MATn bit is set to 1, the CCFn flag for the module will be set each time a 16-bit comparator match (rising edge) occurs. The CF flag in PCA0CN can be used to detect the overflow (falling edge). The duty cycle for 16-Bit PWM Mode is given by Equation 26.3.

Important Note About Capture/Compare Registers: When writing a 16-bit value to the PCA0 Capture/Compare registers, the low byte should always be written first. Writing to PCA0CPLn clears the ECOMn bit to 0; writing to PCA0CPHn sets ECOMn to 1.

$$\text{Duty Cycle} = \frac{(65536 - \text{PCA0CPn})}{65536}$$

Equation 26.3. 16-Bit PWM Duty Cycle

Using Equation 26.3, the largest duty cycle is 100% (PCA0CPn = 0), and the smallest duty cycle is 0.0015% (PCA0CPn = 0xFFFF). A 0% duty cycle may be generated by clearing the ECOMn bit to 0.

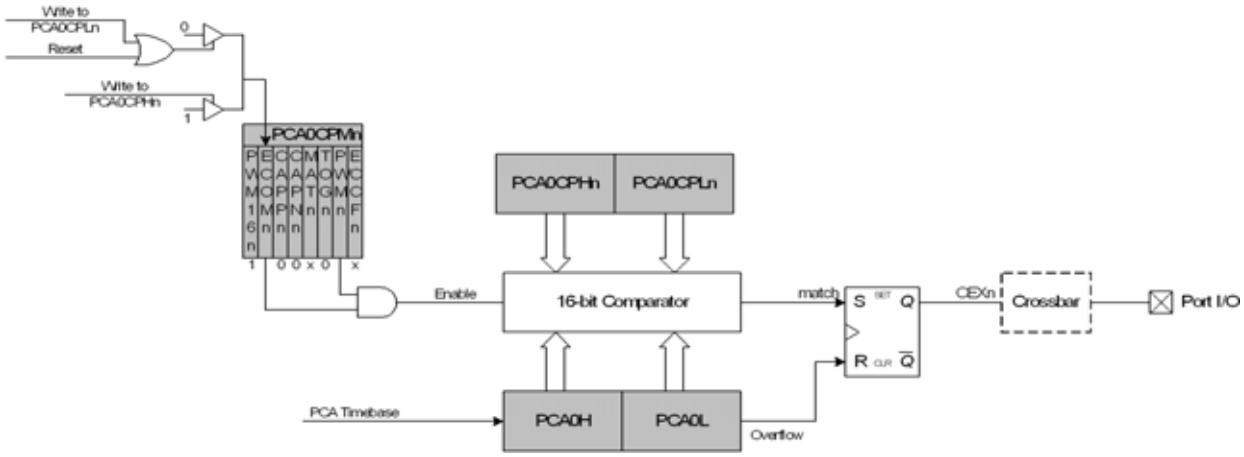

Figure 26.9. PCA 16-Bit PWM Mode

26.4. Watchdog Timer Mode

A programmable watchdog timer (WDT) function is available through the PCA Module 4. The WDT is used to generate a reset if the time between writes to the WDT update register (PCA0CPH4) exceed a specified limit. The WDT can be configured and enabled/disabled as needed by software.

With the WDTE bit set in the PCA0MD register, Module 4 operates as a watchdog timer (WDT). The Module 4 high byte is compared to the PCA counter high byte; the Module 4 low byte holds the offset to be used when WDT updates are performed. **The Watchdog Timer is enabled on reset. Writes to some PCA registers are restricted while the Watchdog Timer is enabled.** The WDT will generate a reset shortly after code begins execution. To avoid this reset, the WDT should be explicitly disabled (and optionally re-configured and re-enabled if it is used in the system).

26.4.1. Watchdog Timer Operation

While the WDT is enabled:

- PCA counter is forced on.
- Writes to PCA0L and PCA0H are not allowed.
- PCA clock source bits (CPS2–CPS0) are frozen.
- PCA Idle control bit (CIDL) is frozen.
- Module 4 is forced into software timer mode.
- Writes to the Module 4 mode register (PCA0CPM4) are disabled.

While the WDT is enabled, writes to the CR bit will not change the PCA counter state; the counter will run until the WDT is disabled. The PCA counter run control bit (CR) will read zero if the WDT is enabled but user software has not enabled the PCA counter. If a match occurs between PCA0CPH4 and PCA0H while the WDT is enabled, a reset will be generated. To prevent a WDT reset, the WDT may be updated with a write of any value to PCA0CPH4. Upon a PCA0CPH4 write, PCA0H plus the offset held in PCA0CPL4 is loaded into PCA0CPH4 (See Figure 26.10).

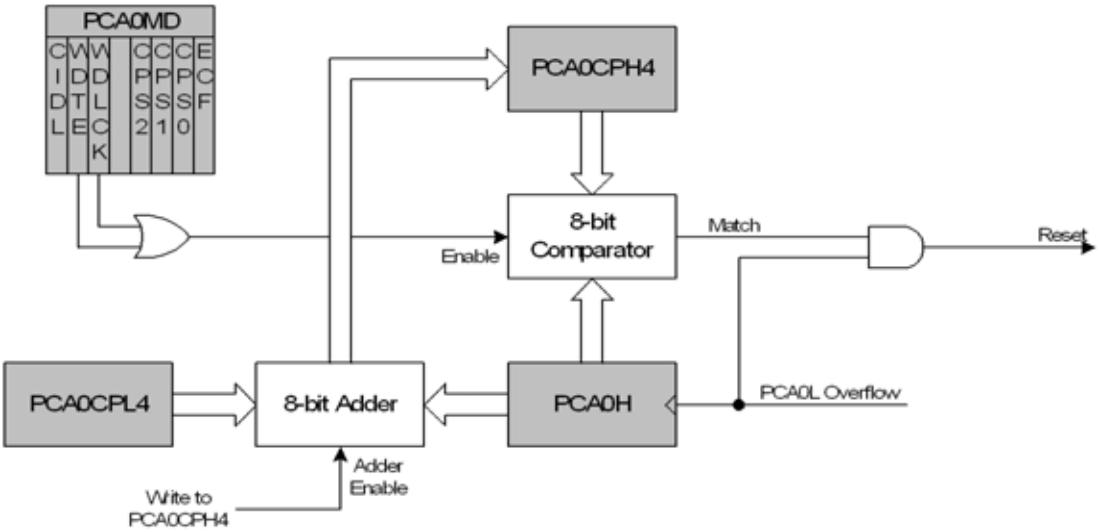

Figure 26.10. PCA Module 4 with Watchdog Timer Enabled

The 8-bit offset held in PCA0CPH4 is compared to the upper byte of the 16-bit PCA counter. This offset value is the number of PCA0L overflows before a reset. Up to 256 PCA clocks may pass before the first PCA0L overflow occurs, depending on the value of the PCA0L when the update is performed. The total offset is then given (in PCA clocks) by Equation 26.4, where PCA0L is the value of the PCA0L register at the time of the update.

$$\text{Offset} = (256 \times \text{PCA0CPL4}) + (256 - \text{PCA0L})$$

Equation 26.4. Watchdog Timer Offset in PCA Clocks

The WDT reset is generated when PCA0L overflows while there is a match between PCA0CPH4 and PCA0H. Software may force a WDT reset by writing a 1 to the CCF4 flag (PCA0CN.4) while the WDT is enabled.

26.4.2. Watchdog Timer Usage

To configure the WDT, perform the following tasks:

1. Disable the WDT by writing a 0 to the WDTE bit.
2. Select the desired PCA clock source (with the CPS2–CPS0 bits).
3. Load PCA0CPL4 with the desired WDT update offset value.
4. Configure the PCA Idle mode (set CIDL if the WDT should be suspended while the CPU is in Idle mode).
5. Enable the WDT by setting the WDTE bit to 1.
6. Reset the WDT timer by writing to PCA0CPH4.

The PCA clock source and Idle mode select cannot be changed while the WDT is enabled. The watchdog timer is enabled by setting the WDTE or WDLCK bits in the PCA0MD register. When WDLCK is set, the WDT cannot be disabled until the next system reset. If WDLCK is not set, the WDT is disabled by clearing the WDTE bit.

The WDT is enabled following any reset. The PCA0 counter clock defaults to the system clock divided by 12, PCA0L defaults to 0x00, and PCA0CPL4 defaults to 0x00. Using Equation 26.4, this results in a WDT timeout interval of 256 PCA clock cycles, or 3072 system clock cycles. Table 26.3 lists some example timeout intervals for typical system clocks.

Table 26.3. Watchdog Timer Timeout Intervals[1]

System Clock (Hz)	PCA0CPL4	Timeout Interval (ms)
48,000,000	255	16.4
48,000,000	128	8.3
48,000,000	32	2.1
12,000,000	255	65.5
12,000,000	128	33.0
12,000,000	32	8.4
1,500,000[2]	255	524.3
1,500,000[2]	128	264.2
1,500,000[2]	32	67.6
32,768	255	24,000
32,768	128	12,094
32,768	32	3,094

Notes:
1. Assumes SYSCLK/12 as the PCA clock source, and a PCA0L value of 0x00 at the update time.
2. Internal SYSCLK reset frequency = Internal Oscillator divided by 8.

26.5. Register Descriptions for PCA0

Following are detailed descriptions of the special function registers related to the operation of the PCA.

SFR Definition 26.1. PCA0CN: PCA Control

Bit	7	6	5	4	3	2	1	0
Name	CF	CR		CCF4	CCF3	CCF2	CCF1	CCF0
Type	R/W	R/W	R	R/W	R/W	R/W	R/W	R/W
Reset	0	0	0	0	0	0	0	0

SFR Address = 0xD8; SFR Page = All Pages; Bit-Addressable

Bit	Name	Function
7	CF	**PCA Counter/Timer Overflow Flag.** Set by hardware when the PCA Counter/Timer overflows from 0xFFFF to 0x0000. When the Counter/Timer Overflow (CF) interrupt is enabled, setting this bit causes the CPU to vector to the PCA interrupt service routine. This bit is not automatically cleared by hardware and must be cleared by software.
6	CR	**PCA Counter/Timer Run Control.** This bit enables/disables the PCA Counter/Timer. 0: PCA Counter/Timer disabled. 1: PCA Counter/Timer enabled.
5	Unused	Read = 0b, Write = Don't care.
2	CCF4	**PCA Module 4 Capture/Compare Flag.** This bit is set by hardware when a match or capture occurs. When the CCF4 interrupt is enabled, setting this bit causes the CPU to vector to the PCA interrupt service routine. This bit is not automatically cleared by hardware and must be cleared by software.
1	CCF3	**PCA Module 3 Capture/Compare Flag.** This bit is set by hardware when a match or capture occurs. When the CCF3 interrupt is enabled, setting this bit causes the CPU to vector to the PCA interrupt service routine. This bit is not automatically cleared by hardware and must be cleared by software.
2	CCF2	**PCA Module 2 Capture/Compare Flag.** This bit is set by hardware when a match or capture occurs. When the CCF2 interrupt is enabled, setting this bit causes the CPU to vector to the PCA interrupt service routine. This bit is not automatically cleared by hardware and must be cleared by software.
1	CCF1	**PCA Module 1 Capture/Compare Flag.** This bit is set by hardware when a match or capture occurs. When the CCF1 interrupt is enabled, setting this bit causes the CPU to vector to the PCA interrupt service routine. This bit is not automatically cleared by hardware and must be cleared by software.
0	CCF0	**PCA Module 0 Capture/Compare Flag.** This bit is set by hardware when a match or capture occurs. When the CCF0 interrupt is enabled, setting this bit causes the CPU to vector to the PCA interrupt service routine. This bit is not automatically cleared by hardware and must be cleared by software.

SFR Definition 26.2. PCA0MD: PCA Mode

Bit	7	6	5	4	3	2	1	0
Name	CIDL	WDTE	WDLCK		CPS[2:0]			ECF
Type	R/W	R/W	R/W	R	R/W			R/W
Reset	0	1	0	0	0	0	0	0

SFR Address = 0xD9; SFR Page = All Pages

Bit	Name	Function
7	CIDL	**PCA Counter/Timer Idle Control.** Specifies PCA behavior when CPU is in Idle Mode. 0: PCA continues to function normally while the system controller is in Idle Mode. 1: PCA operation is suspended while the system controller is in Idle Mode.
6	WDTE	**Watchdog Timer Enable.** If this bit is set, PCA Module 4 is used as the watchdog timer. 0: Watchdog Timer disabled. 1: PCA Module 4 enabled as Watchdog Timer.
5	WDLCK	**Watchdog Timer Lock.** This bit locks/unlocks the Watchdog Timer Enable. When WDLCK is set, the Watchdog Timer may not be disabled until the next system reset. 0: Watchdog Timer Enable unlocked. 1: Watchdog Timer Enable locked.
4	Unused	Read = 0b, Write = Don't care.
3:1	CPS[2:0]	**PCA Counter/Timer Pulse Select.** These bits select the timebase source for the PCA counter 000: System clock divided by 12 001: System clock divided by 4 010: Timer 0 overflow 011: High-to-low transitions on ECI (max rate = system clock divided by 4) 100: System clock 101: External clock divided by 8 (synchronized with the system clock) 11x: Reserved
0	ECF	**PCA Counter/Timer Overflow Interrupt Enable.** This bit sets the masking of the PCA Counter/Timer Overflow (CF) interrupt. 0: Disable the CF interrupt. 1: Enable a PCA Counter/Timer Overflow interrupt request when CF (PCA0CN.7) is set.
Note: When the WDTE bit is set to 1, the other bits in the PCA0MD register cannot be modified. To change the contents of the PCA0MD register, the Watchdog Timer must first be disabled.		

SFR Definition 26.3. PCA0CPMn: PCA Capture/Compare Mode

Bit	7	6	5	4	3	2	1	0
Name	PWM16n	ECOMn	CAPPn	CAPNn	MATn	TOGn	PWMn	ECCFn
Type	R/W	R/W	R/W	R/W	R/W	R/W	R/W	R/W
Reset	0	0	0	0	0	0	0	0

SFR Addresses: 0xDA (n = 0), 0xDB (n = 1), 0xDC (n = 2), 0xDD (n = 3), 0xDE (n = 4)

SFR Pages: All Pages (n = 0), All Pages (n = 1), All Pages (n = 2), All Pages (n = 3), All Pages (n = 4)

Bit	Name	Function
7	PWM16n	**16-bit Pulse Width Modulation Enable.** This bit enables 16-bit mode when Pulse Width Modulation mode is enabled. 0: 8-bit PWM selected. 1: 16-bit PWM selected.
6	ECOMn	**Comparator Function Enable.** This bit enables the comparator function for PCA module n when set to 1.
5	CAPPn	**Capture Positive Function Enable.** This bit enables the positive edge capture for PCA module n when set to 1.
4	CAPNn	**Capture Negative Function Enable.** This bit enables the negative edge capture for PCA module n when set to 1.
3	MATn	**Match Function Enable.** This bit enables the match function for PCA module n when set to 1. When enabled, matches of the PCA counter with a module's capture/compare register cause the CCFn bit in PCA0MD register to be set to logic 1.
2	TOGn	**Toggle Function Enable.** This bit enables the toggle function for PCA module n when set to 1. When enabled, matches of the PCA counter with a module's capture/compare register cause the logic level on the CEXn pin to toggle. If the PWMn bit is also set to logic 1, the module operates in Frequency Output Mode.
1	PWMn	**Pulse Width Modulation Mode Enable.** This bit enables the PWM function for PCA module n when set to 1. When enabled, a pulse width modulated signal is output on the CEXn pin. 8-bit PWM is used if PWM16n is cleared; 16-bit mode is used if PWM16n is set to logic 1. If the TOGn bit is also set, the module operates in Frequency Output Mode.
0	ECCFn	**Capture/Compare Flag Interrupt Enable.** This bit sets the masking of the Capture/Compare Flag (CCFn) interrupt. 0: Disable CCFn interrupts. 1: Enable a Capture/Compare Flag interrupt request when CCFn is set.
Note: When the WDTE bit is set to 1, the PCA0CPM4 register cannot be modified, and module 4 acts as the watchdog timer. To change the contents of the PCA0CPM4 register or the function of module 4, the Watchdog Timer must be disabled.		

SFR Definition 26.4. PCA0L: PCA Counter/Timer Low Byte

Bit	7	6	5	4	3	2	1	0
Name	PCA0[7:0]							
Type	R/W	R/W	R/W	R/W	R/W	R/W	R/W	R/W
Reset	0	0	0	0	0	0	0	0

SFR Address = 0xF9; SFR Page = All Pages

Bit	Name	Function
7:0	PCA0[7:0]	**PCA Counter/Timer Low Byte.** The PCA0L register holds the low byte (LSB) of the 16-bit PCA Counter/Timer.
Note: When the WDTE bit is set to 1, the PCA0L register cannot be modified by software. To change the contents of the PCA0L register, the Watchdog Timer must first be disabled.		

SFR Definition 26.5. PCA0H: PCA Counter/Timer High Byte

Bit	7	6	5	4	3	2	1	0
Name	PCA0[15:8]							
Type	R/W	R/W	R/W	R/W	R/W	R/W	R/W	R/W
Reset	0	0	0	0	0	0	0	0

SFR Address = 0xFA; SFR Page = All Pages

Bit	Name	Function
7:0	PCA0[15:8]	**PCA Counter/Timer High Byte.** The PCA0H register holds the high byte (MSB) of the 16-bit PCA Counter/Timer. Reads of this register will read the contents of a “snapshot” register, whose contents are updated only when the contents of PCA0L are read (see Section 26.1).
Note: When the WDTE bit is set to 1, the PCA0H register cannot be modified by software. To change the contents of the PCA0H register, the Watchdog Timer must first be disabled.		

SFR Definition 26.6. PCA0CPLn: PCA Capture Module Low Byte

Bit	7	6	5	4	3	2	1	0
Name	PCA0CPn[7:0]							
Type	R/W	R/W	R/W	R/W	R/W	R/W	R/W	R/W
Reset	0	0	0	0	0	0	0	0

SFR Addresses: 0xFB (n = 0), 0xE9 (n = 1), 0xEB (n = 2), 0xED (n = 3), 0xFD (n = 4)

SFR Pages: All Pages (n = 0), All Pages (n = 1), All Pages (n = 2), All Pages (n = 3), All Pages (n = 4)

Bit	Name	Function
7:0	PCA0CPn[7:0]	**PCA Capture Module Low Byte.** The PCA0CPLn register holds the low byte (LSB) of the 16-bit capture module n.
Note: A write to this register will clear the module's ECOMn bit to a 0.		

SFR Definition 26.7. PCA0CPHn: PCA Capture Module High Byte

Bit	7	6	5	4	3	2	1	0
Name	PCA0CPn[15:8]							
Type	R/W	R/W	R/W	R/W	R/W	R/W	R/W	R/W
Reset	0	0	0	0	0	0	0	0

SFR Addresses: 0xFC (n = 0), 0xEA (n = 1), 0xEC (n = 2), 0xEE (n = 3), 0xFE (n = 4)

SFR Pages: All Pages (n = 0), All Pages (n = 1), All Pages (n = 2), All Pages (n = 3), All Pages (n = 4)

Bit	Name	Function
7:0	PCA0CPn[15:8]	**PCA Capture Module High Byte.** The PCA0CPHn register holds the high byte (MSB) of the 16-bit capture module n.
Note: A write to this register will set the module's ECOMn bit to a 1.		

27. C2 Interface

C8051F388/9/A/B devices include an on-chip Silicon Labs 2-Wire (C2) debug interface to allow Flash programming and in-system debugging with the production part installed in the end application. The C2 interface uses a clock signal (C2CK) and a bi-directional C2 data signal (C2D) to transfer information between the device and a host system. See the C2 Interface Specification for details on the C2 protocol.

27.1. C2 Interface Registers

The following describes the C2 registers necessary to perform Flash programming through the C2 interface. All C2 registers are accessed through the C2 interface as described in the C2 Interface Specification.

C2 Register Definition 27.1. C2ADD: C2 Address

Bit	7	6	5	4	3	2	1	0
Name	C2ADD[7:0]							
Type	R/W							
Reset	0	0	0	0	0	0	0	0

Bit	Name	Function	
7:0	C2ADD[7:0]	**C2 Address.** The C2ADD register is accessed via the C2 interface to select the target Data register for C2 Data Read and Data Write commands.	
		Address	**Description**
		0x00	Selects the Device ID register for Data Read instructions
		0x01	Selects the Revision ID register for Data Read instructions
		0x02	Selects the C2 Flash Programming Control register for Data Read/Write instructions
		0xAD	Selects the C2 Flash Programming Data register for Data Read/Write instructions

C2 Register Definition 27.2. DEVICEID: C2 Device ID

Bit	7	6	5	4	3	2	1	0
Name	DEVICEID[7:0]							
Type	R/W							
Reset	0	0	1	0	1	0	0	0

C2 Address: 0x00

Bit	Name	Function
7:0	DEVICEID[7:0]	**Device ID.** This read-only register returns the 8-bit device ID: 0x28 (C8051F388/9/A/B).

C2 Register Definition 27.3. REVID: C2 Revision ID

Bit	7	6	5	4	3	2	1	0
Name	REVID[7:0]							
Type	R/W							
Reset	Varies	Varies	Varies	Varies	Varies	Varies	Varies	Varies

C2 Address: 0x01

Bit	Name	Function
7:0	REVID[7:0]	**Revision ID.** This read-only register returns the 8-bit revision ID. For example: 0x00 = Revision A or Revision B.

C2 Register Definition 27.4. FPCTL: C2 Flash Programming Control

Bit	7	6	5	4	3	2	1	0
Name	FPCTL[7:0]							
Type	R/W							
Reset	0	0	0	0	0	0	0	0

C2 Address: 0x02

Bit	Name	Function
7:0	FPCTL[7:0]	**Flash Programming Control Register.** This register is used to enable Flash programming via the C2 interface. To enable C2 Flash programming, the following codes must be written in order: 0x02, 0x01. Note that once C2 Flash programming is enabled, a system reset must be issued to resume normal operation.

C2 Register Definition 27.5. FPDAT: C2 Flash Programming Data

Bit	7	6	5	4	3	2	1	0
Name	FPDAT[7:0]							
Type	R/W							
Reset	0	0	0	0	0	0	0	0

C2 Address: 0xAD

Bit	Name	Function	
7:0	FPDAT[7:0]	**C2 Flash Programming Data Register.** This register is used to pass Flash commands, addresses, and data during C2 Flash accesses. Valid commands are listed below.	
		Code	**Command**
		0x06	Flash Block Read
		0x07	Flash Block Write
		0x08	Flash Page Erase
		0x03	Device Erase

27.2. C2 Pin Sharing

The C2 protocol allows the C2 pins to be shared with user functions so that in-system debugging and Flash programming may be performed. This is possible because C2 communication is typically performed when the device is in the halt state, where all on-chip peripherals and user software are stalled. In this halted state, the C2 interface can safely 'borrow' the C2CK ($\overline{RST}$) and C2D pins. In most applications, external resistors are required to isolate C2 interface traffic from the user application. A typical isolation configuration is shown in Figure 27.1.

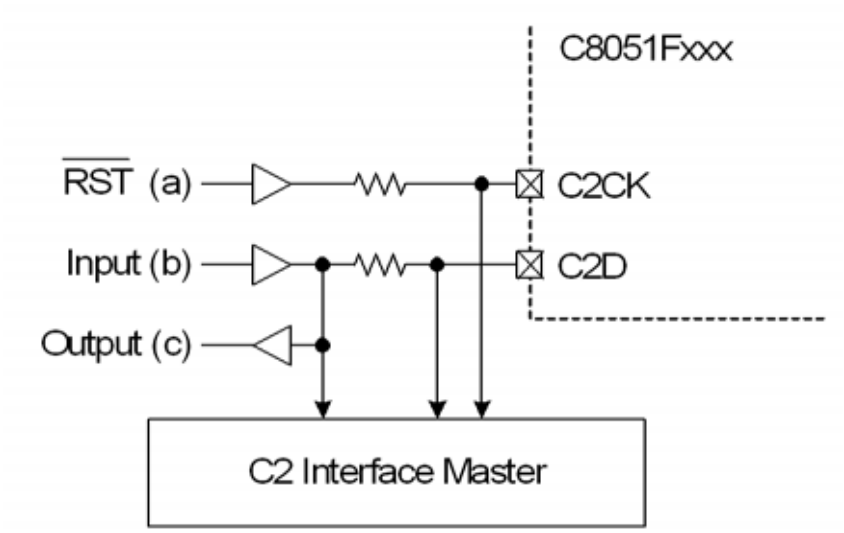

Figure 27.1. Typical C2 Pin Sharing

The configuration in Figure 27.1 assumes the following:

1. The user input (b) cannot change state while the target device is halted.
2. The $\overline{RST}$ pin on the target device is used as an input only.

Additional resistors may be necessary depending on the specific application.

28. Revision Specific Behavior

This chapter contains behavioral differences between the C8051F388/9/A/B hardware revisions and behavior as stated in the data sheet.

28.1. Revision Identification

The Lot ID Code on the top side of the device package can be used for decoding device revision information. On C8051F388/9/A/B devices, the revision letter is the first letter of the Lot ID Code.

Figure 28.1, Figure 28.2, and Figure 28.3 show how to find the Lot ID Code on the top side of the device package.

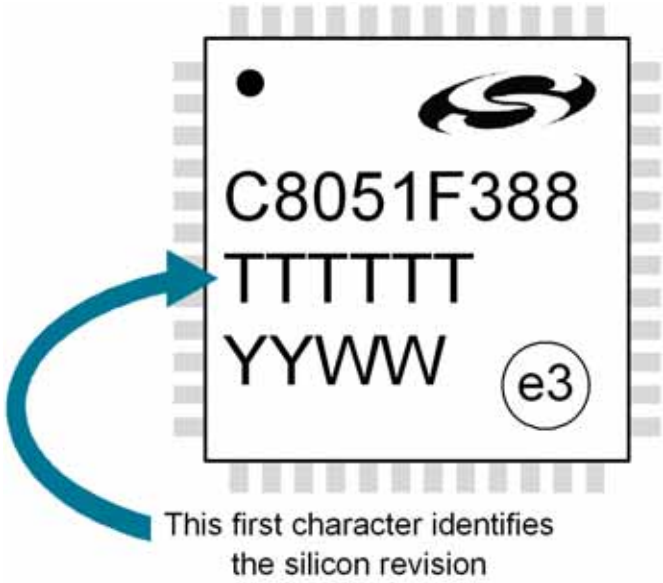

Figure 28.1. Device Package – TQFP48

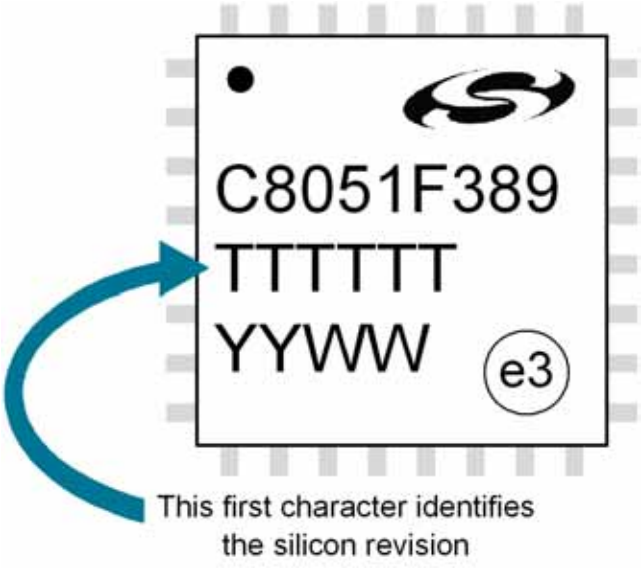

Figure 28.2. Device Package – LQFP32

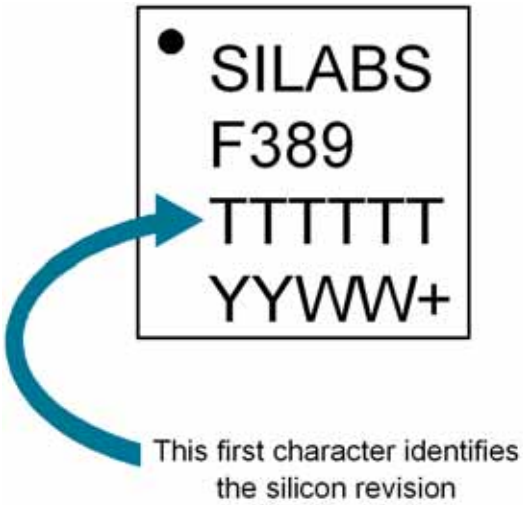

Figure 28.3. Device Package – QFN32

28.2. INT2 Pin Not Connected

Problem

The INT2 pin is non-functional on revision A C8051F388/9/A/B devices.

Impacts

The INT2 pin cannot be used to generate an interrupt.

Workaround

The /INT0 and /INT1 external interrupts are available on P0 and can still be used to generate an external pin interrupt.

Resolution

This behavior has been corrected on revision B of this device.

DOCUMENT CHANGE LIST

Revision 0.9 to Revision 0.91

- Updated “Power” on page 33 to mention the INT2 pin may be left floating if it’s not used.
- Added INT2 to Table 5.1, “Absolute Maximum Ratings,” on page 34 and Table 5.3, “Port I/O DC Electrical Characteristics,” on page 36.
- Added INT2 to Table 3.1, “Pin Definitions for the C8051F388/9/A/B,” on page 21.
- Updated Figure 3.1, Figure 3.4, and Figure 3.7 to show the INT2 pin.
- Added “External Interrupt 2 (INT2)” on page 70.
- Updated SFR Definition 9.1 to include INT2.
- Added INT2 to Table 16.1, “Interrupt Summary,” on page 114.
- Updated SFR Definition 16.5 and SFR Definition 16.6 to include INT2.
- Updated “Internal Oscillator Suspend Mode” on page 139 to mention INT2.

Revision 0.91 to Revision 1.0

- Updated Flash Endurance minimum specification, Flash Erase Cycle Time maximum specification, and added a note to Table 5.6 on page 37.
- Updated Figure 21.1 to show proper clock sources for SMBus0 and SMBus1.

Revision 1.0 to Revision 1.1

- Added revision B.
- Added “28. Revision Specific Behavior” .

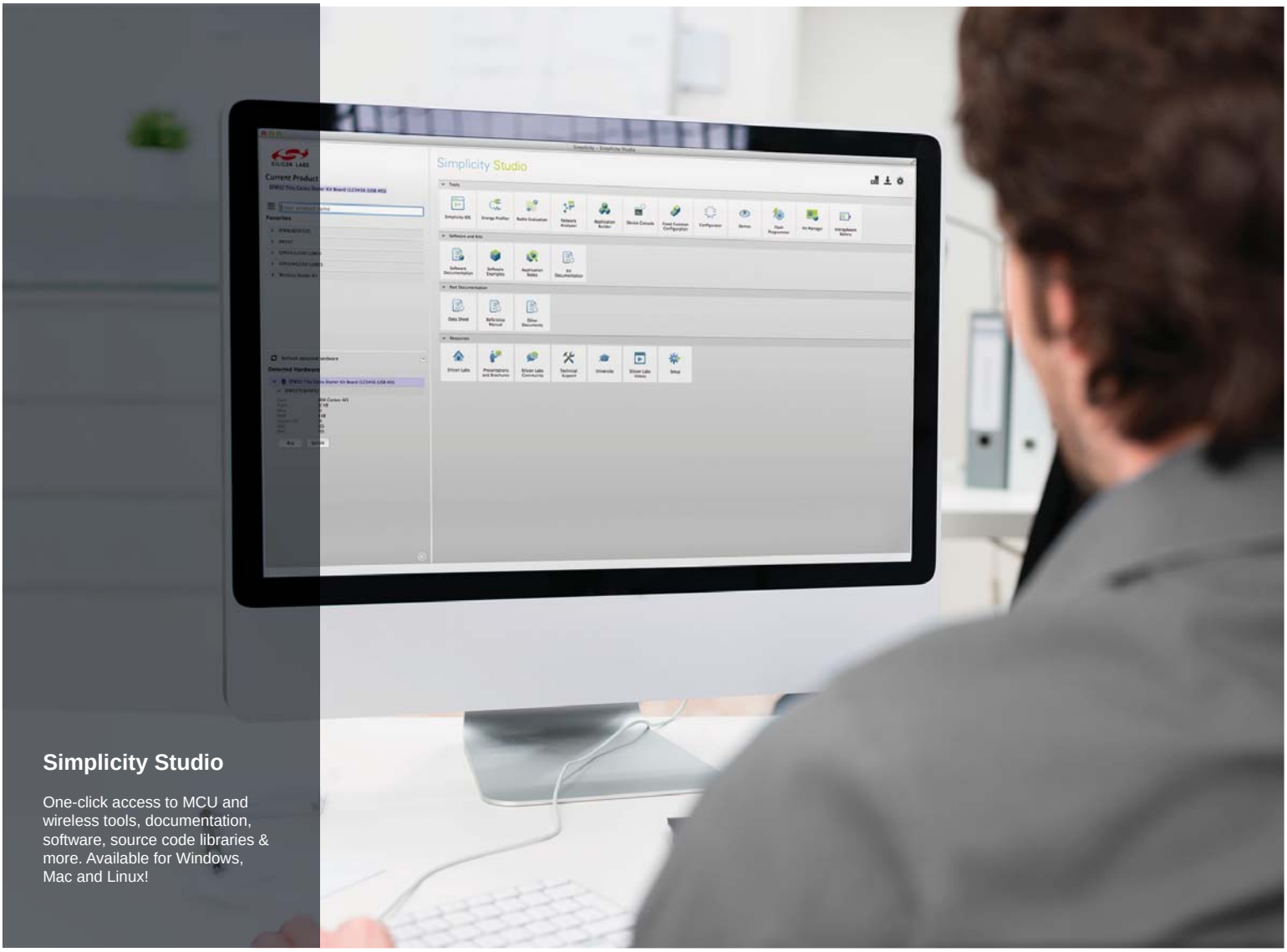

Simplicity Studio

One-click access to MCU and wireless tools, documentation, software, source code libraries & more. Available for Windows, Mac and Linux!

IoT Portfolio
www.silabs.com/IoT

SW/HW
www.silabs.com/simplicity

Quality
www.silabs.com/quality

Support and Community
community.silabs.com

Disclaimer
Silicon Laboratories intends to provide customers with the latest, accurate, and in-depth documentation of all peripherals and modules available for system and software implementers using or intending to use the Silicon Laboratories products. Characterization data, available modules and peripherals, memory sizes and memory addresses refer to each specific device, and "Typical" parameters provided can and do vary in different applications. Application examples described herein are for illustrative purposes only. Silicon Laboratories reserves the right to make changes without further notice and limitation to product information, specifications, and descriptions herein, and does not give warranties as to the accuracy or completeness of the included information. Silicon Laboratories shall have no liability for the consequences of use of the information supplied herein. This document does not imply or express copyright licenses granted hereunder to design or fabricate any integrated circuits. The products must not be used within any Life Support System without the specific written consent of Silicon Laboratories. A "Life Support System" is any product or system intended to support or sustain life and/or health, which, if it fails, can be reasonably expected to result in significant personal injury or death. Silicon Laboratories products are generally not intended for military applications. Silicon Laboratories products shall under no circumstances be used in weapons of mass destruction including (but not limited to) nuclear, biological or chemical weapons, or missiles capable of delivering such weapons.

Trademark Information
Silicon Laboratories Inc., Silicon Laboratories, Silicon Labs, SiLabs and the Silicon Labs logo, CMEMS®, EFM, EFM32, EFR, Energy Micro, Energy Micro logo and combinations thereof, "the world's most energy friendly microcontrollers", Ember®, EZLink®, EZMac®, EZRadio®, EZRadioPRO®, DSPLL®, ISOmodem ®, Precision32®, ProSLIC®, SiPHY®, USBXpress® and others are trademarks or registered trademarks of Silicon Laboratories Inc. ARM, CORTEX, Cortex-M3 and THUMB are trademarks or registered trademarks of ARM Holdings. Keil is a registered trademark of ARM Limited. All other products or brand names mentioned herein are trademarks of their respective holders.

Silicon Laboratories Inc.
400 West Cesar Chavez
Austin, TX 78701
USA

http://www.silabs.com