THIS DRAWING IS UNPUBLISHED. RELEASED FOR PUBLICATION -,- .
© COPYRIGHT - By - ALL RIGHTS RESERVED.

LOC	DIST
CM	00

REVISIONS

P	LTR	DESCRIPTION	DATE	DWN	APVD
	L1	REVISED PER ECR-12-011660	01FEB13	KH	TM

1 PARTS COMPLY TO AMP SOLDERABILITY SPECIFICATION 109-11-3.

2 CIRCUIT IDENTIFICATION CHARACTERS ARE ADJACENT TO THE INDICATED CAVITIES, BUT LOCATION AND ORIENTATION MAY DIFFER FROM PRINT.

3 DIMENSIONS IN BRACKETS ARE IN INCHES.

4 CONTACT IS STAMPED FROM PRE-PLATED STOCK WHICH IS PLATED OVERALL WITH 0.00127 – 0.00178 [.000050 – .000070] NICKEL, THEN STRIPED WITH 0.00076 [.000030] GOLD IN CONTACT AREA INDICATED AND MATTE TIN LEAD ON SOLDER TAIL END.

5 CONTACT IS STAMPED FROM PRE-PLATED STOCK WHICH IS PLATED OVERALL WITH 0.00127 – 0.00178 [.000050 – .000070] NICKEL, THEN STRIPED WITH 0.00076 [.000030] GOLD IN CONTACT AREA INDICATED AND MATTE TIN ON SOLDER TAIL END.

6 SUPERSEDED BY 643412-3

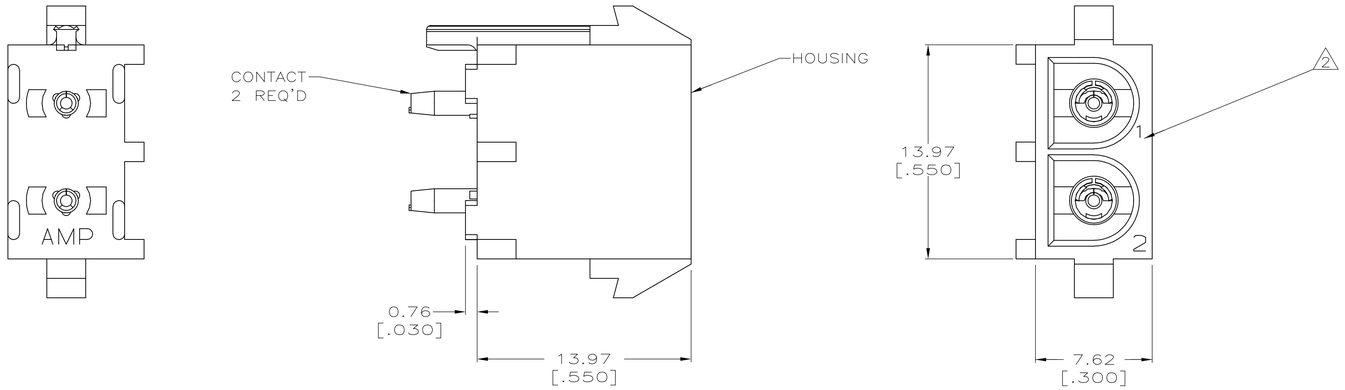

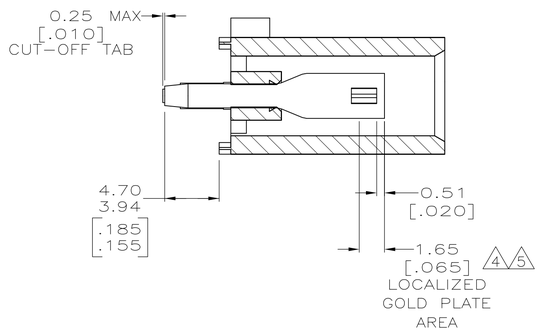

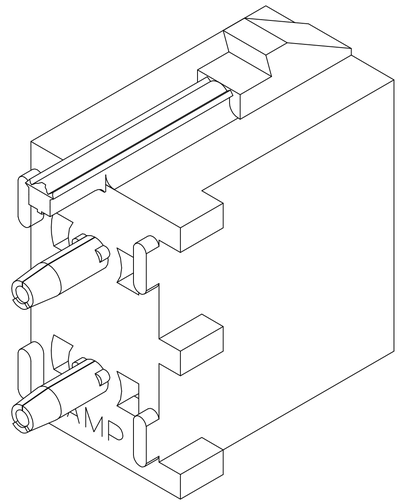

3-DIMENSIONAL MODEL
NTS

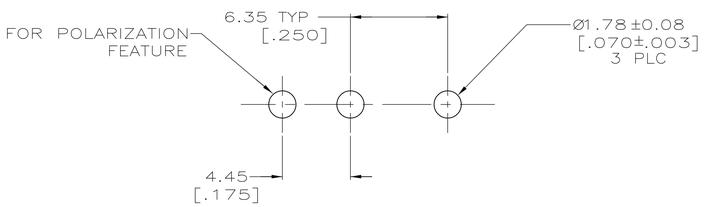

RECOMMENDED MOUNTING HOLE PATTERN
FOR 1.57 [.062] THICK P.C. BOARD

CONTACT MATERIAL AND FINISH	HOUSING MATERIAL	PART NUMBER
PHOSPHOR BRONZE, GOLD 5	NYLON,UL94V-0,WHITE	643412-3
6 PHOSPHOR BRONZE, GOLD 4	NYLON,UL94V-0,WHITE	643412-2
PHOSPHOR BRONZE, PRE-TIN	NYLON,UL94V-0,WHITE	643412-1

THIS DRAWING IS A CONTROLLED DOCUMENT.

DIMENSIONS: mm [INCHES]

TOLERANCES UNLESS OTHERWISE SPECIFIED:
0 PLC ± –
1 PLC ± –
2 PLC ± 0.13 [.005]
3 PLC ± –
4 PLC ± –
ANGLES ± 9±30'

MATERIAL: SEE TABLE
FINISH: SEE TABLE

DWN L. McEACHIN 07-JAN-2000
CHK K. COBLE 07-JUN-2000
APVD K. COBLE 07-JUN-2000
PRODUCT SPEC –
APPLICATION SPEC –
WEIGHT –

TE Connectivity

NAME: SOCKET HEADER ASSEMBLY, POLARIZED,2 CIRCUIT UNIVERSAL MATE-N-LOK ™

SIZE	CAGE CODE	DRAWING NO	RESTRICTED TO
A1	00779	C-643412	–

CUSTOMER DRAWING | SCALE 5:1 | SHEET 1 OF 1 | REV L1

4805 (3/11)