THIS DRAWING IS UNPUBLISHED. RELEASED FOR PUBLICATION -,- .
© COPYRIGHT - BY TYCO ELECTRONICS CORPORATION. ALL RIGHTS RESERVED.

LOC	DIST
AD	25

REVISIONS

P	LTR	DESCRIPTION	DATE	DWN	APVD
	O	RELEASED PER EC 0S12-0082-05	03JUN05	JDP	AMS

1. HOUSING MATERIAL: GLASS-FILLED POLYMER.
2. CONTACT MATERIAL: COPPER ALLOY.
3. CONTACT FINISH: DIN 41612 CLASS 2 IN CONTACT AREA. TIN PLATE ON TAILS.
4. PART NUMBER, DATE CODE IDENTIFICATION, CSA LOGO IN THIS APPROXIMATE AREA, ON REVERSE SIDE.
5. CONTACT POINT.
6. RECOMMENDED HOLE SIZE FOR MANUAL APPLICATION OF CONNECTOR ONTO PC BOARD.

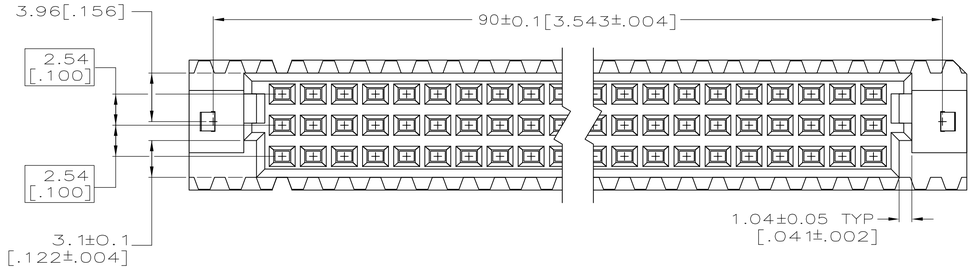

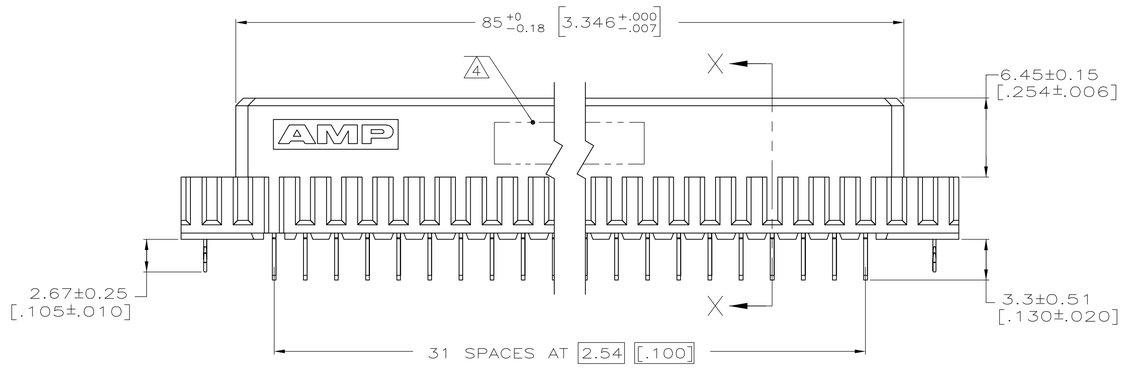

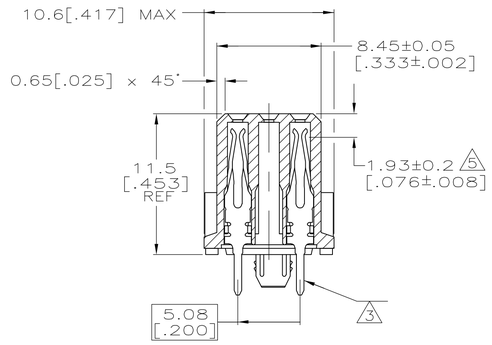

SECTION X-X

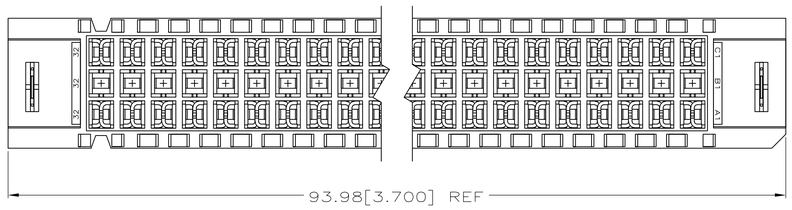

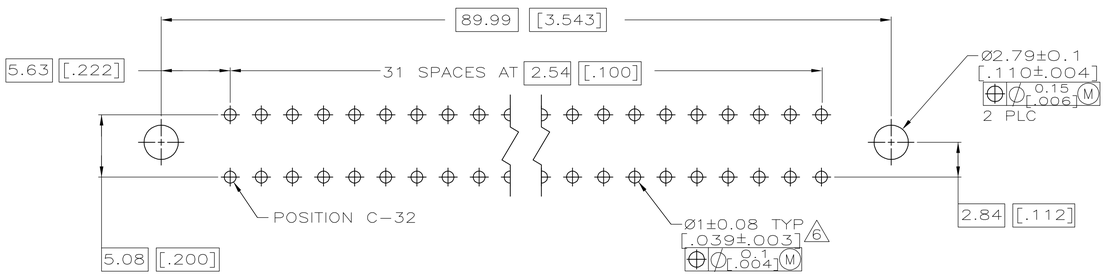

PC BOARD LAYOUT

1 THRU 32	X	–	X	64	5650983-5
POSITIONS LOADED	C	B	A	NO. OF LOADED POSITION	ASSY PART NUMBER
	ROWS LOADED				

THIS DRAWING IS A CONTROLLED DOCUMENT.

DIMENSIONS: mm [INCHES]

TOLERANCES UNLESS OTHERWISE SPECIFIED:
0 PLC ± –
1 PLC ± –
2 PLC ± 0.13[.005]
3 PLC ± –
4 PLC ± –
ANGLES ± –

MATERIAL 1 2

FINISH 3

DWN J. POLIGNONE 03JUN05
CHK A. SHARPE 03JUN05
APVD A. SHARPE 03JUN05

PRODUCT SPEC —
APPLICATION SPEC —
WEIGHT —

CUSTOMER DRAWING

Tyco Electronics Corporation
Harrisburg, PA 17105-3608

NAME
ASSEMBLY, RECEPTACLE, EUROCARD, TYPE C, A and C, 64/96 POSITION, 3.30[.130] POSITION, WITH BOARD-LOCKS

SIZE	CAGE CODE	DRAWING NO	RESTRICTED TO
A1	00779	C-5650983	—

SCALE	SHEET	REV
4:1	1 OF 1	O

AMP 4805 REV 31MAR2000