THIS DRAWING IS UNPUBLISHED. RELEASED FOR PUBLICATION -,- .
© COPYRIGHT - BY TYCO ELECTRONICS CORPORATION. ALL INTERNATIONAL RIGHTS RESERVED.

CABLE ENTRY DIAMETER MINIMUM	
HOUSING	.065
CONTACT	.021
FERRULE	.126

LOC	DIST
AJ	00

REVISIONS

P	LTR	DESCRIPTION	DATE	DWN	APVD
	A	REVISED PER ECN 94-0474	07-28-95	—	BJH
	B	REVISED PER ECO-08-030676	02-24-09	AEG	JKO

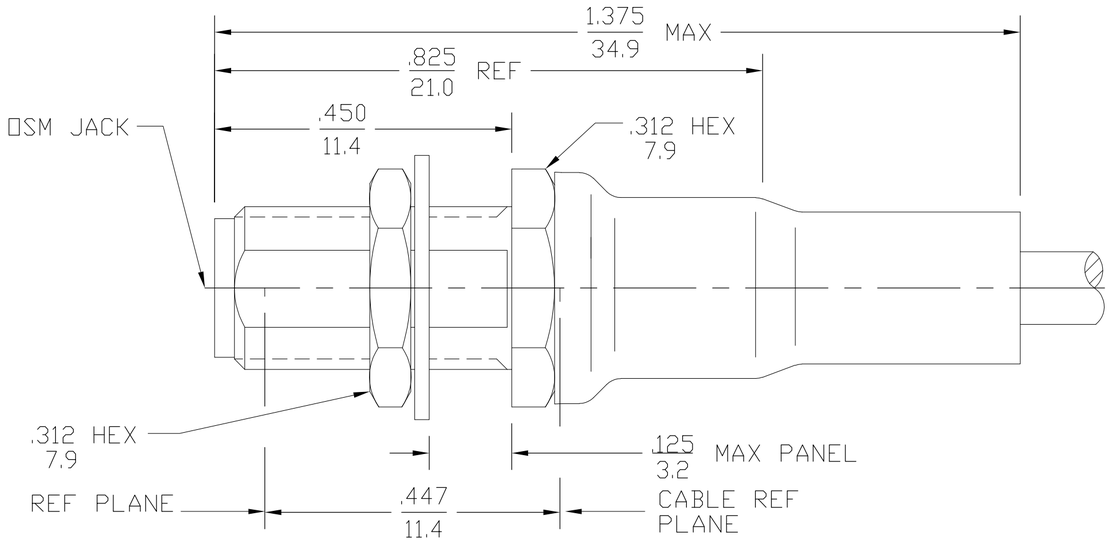

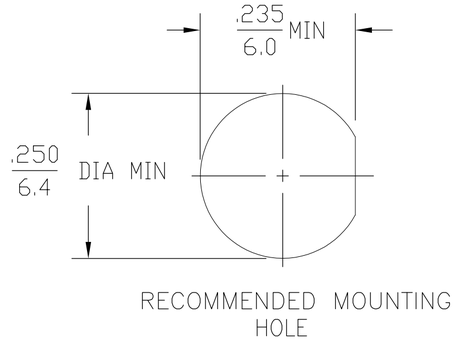

1. BRASS
2. STAINLESS STEEL
3. BERYLLIUM COPPER
4. PTFE
5. GOLD PLATE
6. POLYOLEFIN COMPOUND
7. BRASS OR COPPER

DESIGNED FOR USE WITH RG 188/U AND OTHER CABLES HAVING SIMILAR DIAS.

ELECTRICAL

Nominal Impedance (Ohms) 50
Frequency Range (GHz) DC to 12.4GHz
Volt Rating (VRMS MAX)
@ Sea Level 250
VSWR 1.15+0.02(F)GHz
Insertion Loss (dB MAX) .06 $\sqrt{F(GHz)}$
RF Leakage (dB MIN) -60dB

Dielectric Withstanding Voltage
(VRMS MIN) @ Sea Level 750
Contact Resistance (Milliohms MAX)
Center Contact 3.0
Outer Contact 2.0
Cable to Housing 0.5
RF High Potential @ Sea Level
(VRMS MIN @ 5 MHz) 500
I.R.(Megohms MIN) 5,000

MECHANICAL

Interface Dimensions MIL-STD-348A,
Fig. 310-2
Recommended Mating
Torque 7-10 IN.LBS.
Mating Characteristics:
Insertion (MAX Lbs) 2.0
Withdrawal (MIN Oz) 1.0
Force to Engage and
Disengage (In-Lbs MAX) 2.0
Center Contact Captivation
Axial (Lbs) N/A
Radial (In-Oz) N/A
Cable Retention
Axial Force (Lbs) 20
Torque (In-Oz) N/A
Weight (Grams) TBD

ENVIRONMENTAL

TEMPERATURE RATING -65°C TO +165°C
Vibration MIL-STD-202, Method
204, Condition D
Shock MIL-STD-202, Method 213,
Condition I
Thermal Shock MIL-STD-202,
Method 107, Condition B,
EXCEPT HIGH TEMP +85°C
Moisture Resistance MIL-STD-202,
Method 106
Corrosion - MIL-STD-202, Method
101, Condition B, 5% salt spray

SHRINK TUBE	FERRULE	CONTACT	HOUSING	DIELECTRIC	LOCK WASHER	MOUNTING NUT	TE PN
6	7 5	3 5	1 5	4	2	1 5	1051942-4
6	7 5	3 5	2 5	4	2	2 5	1051942-1

THIS DRAWING IS A CONTROLLED DOCUMENT.

DIMENSIONS: INCHES

TOLERANCES UNLESS OTHERWISE SPECIFIED:
0 PLC ± -
1 PLC ± -
2 PLC ± -
3 PLC ± .005
4 PLC ± -
ANGLES ± 1°

MATERIAL -
FINISH -

DWN K.L 12/22/70
CHK BWC 12/28/70
APVD PRB 12/28/70
PRODUCT SPEC —
APPLICATION SPEC —
WEIGHT —

Tyco Electronics
Tyco Electronics Corporation
Harrisburg, PA 17105-3608

NAME
OSM STRAIGHT BULKHEAD CABLE JACK-SOLDER ATTACHMENT-NCC

SIZE	CAGE CODE	DRAWING NO	RESTRICTED TO
A2	00779	C-1051942	—

CUSTOMER DRAWING | SCALE 5:1 | SHEET 1 OF 1 | REV B

1471-9 (1/08)