MICRO SWITCH
a Honeywell Division
FED. MFG. CODE 91929

SWITCH-ENCLOSED

CATALOG LISTING
BAFI-2RN28-RH
RIGHT HAND)

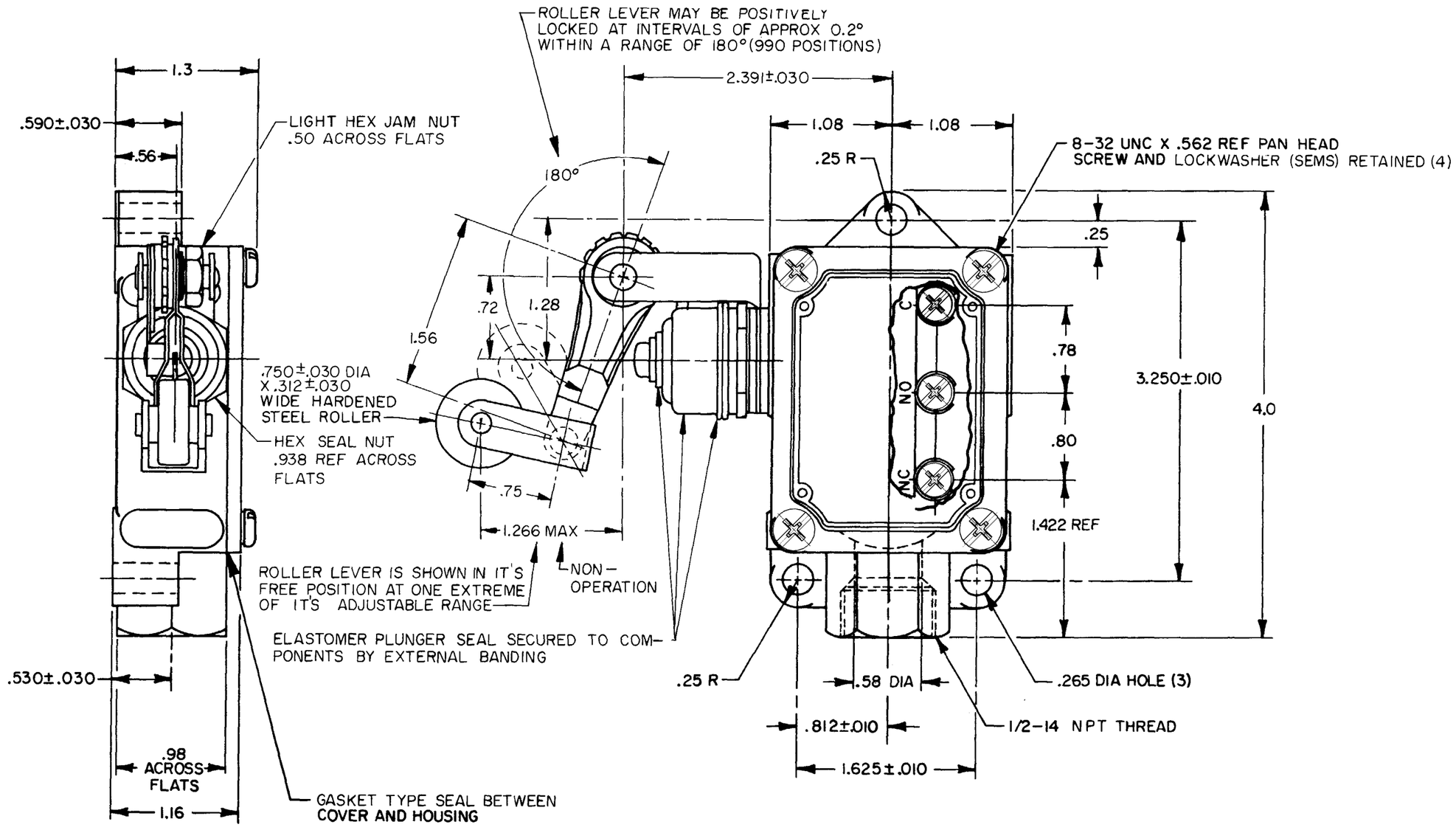

THIS DRAWING COVERS A PROPRIETARY ITEM AND IS THE PROPERTY OF MICRO SWITCH. A DIVISION OF HONEYWELL. THIS DRAWING IS NOT TO BE COPIED OR USED WITHOUT THE APPROVAL OF MICRO SWITCH

THIRD ANGLE PROJECTION

SCALE FULL

DO NOT SCALE PRINT

CHARACTERISTICS	ELECTRICAL DATA
OPERATING FORCE - - - - - - 2 LBS MAX	CONTACT ARRANGEMENT S P D T
RELEASE FORCE - - - - - - - - 8 OZ MIN PRETRAVEL - - - - - - - - - - - .219 MAX DIFFERENTIAL TRAVEL - - - - - - .020 MAX OVERTRAVEL - - - - - - - - - - - .250 MIN	L23 20A 125, 250 OR 480 VAC 10A 125 VAC "L" 1HP 125 VAC, 2HP 250 VAC 1/2A 125 VDC, 1/4A 250 VDC
SWITCH-BASIC REPLACEMENT -- BA-2R708-P7	

UNLESS OTHERWISE SPECIFIED TOLERANCES ARE

ONE PLACE	(.0)	±.030
TWO PLACE	(.00)	±.015
THREE PLACE	(.000)	±.005
ANGLES		±

WEIGHT .670 LB

NOTES
1 - ROLLER LEVER BRACKET ASSEMBLY MAY BE SET IN ANY POSITION AROUND AXIS OF PLUNGER
2 - 8-32 UNC X (.219) BINDER HEAD,COMBINATION , TERMINAL SCREWS AND CUPWASHERS

CATALOG LISTING
BAFI-2RN28-RH
PAGE 1 OF 1
ISSUE 14
REPLACES
RELEASE NO.
CHECK
REVISIONS
A CO-73287M GJW 11 MAY 95
CHECK
CHECK 25 MAY 95
CHECK JJA
CHECK 11 MAY 95
DRAWN GJW
FORMTEK