Jul.1.2019 Copyright 2019 HIROSE ELECTRIC CO., LTD. All Rights Reserved.
In case of consideration for using Automotive equipment / device which demand high reliability, kindly contact our sales window correspondents.

	COUNT	DESCRIPTION OF REVISIONS	BY	CHKD	DATE		COUNT	DESCRIPTION OF REVISIONS	BY	CHKD	DATE
△					. .	△					. .
△					. .	△					. .
△					. .	△					. .

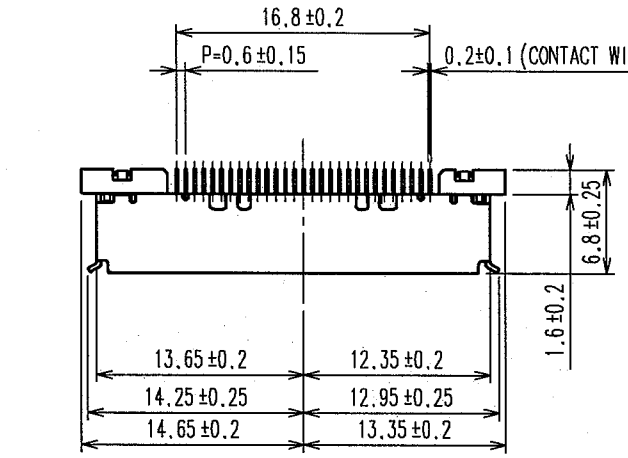

CUT SECTION OF MATED CONNECTOR(4:1)

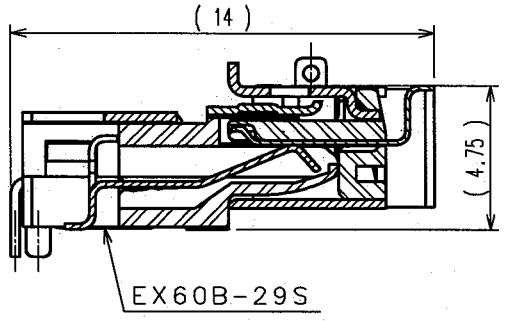

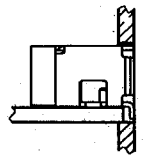

PANEL CUTOUT

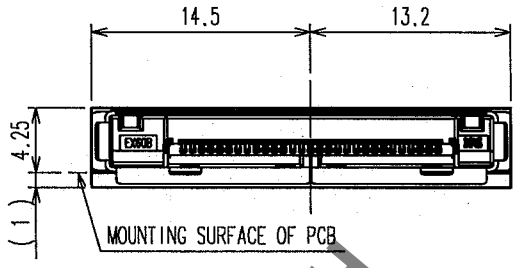

RECOMMENDED PCB PATTERN
(CONNECTOR MOUNTING SIDE)

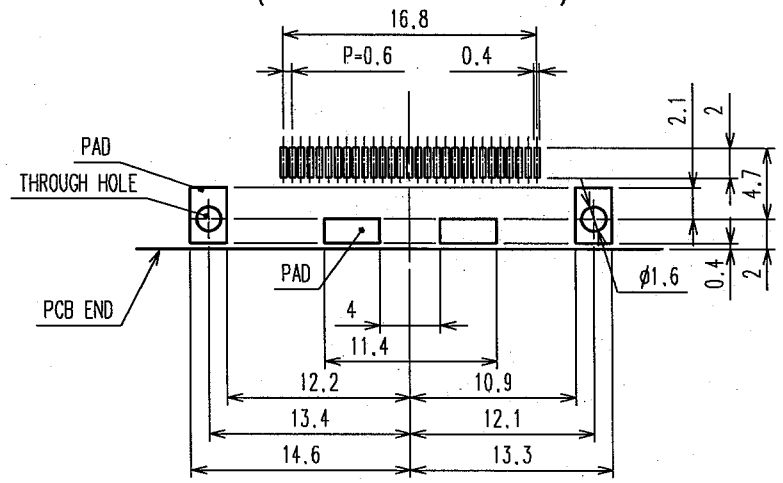

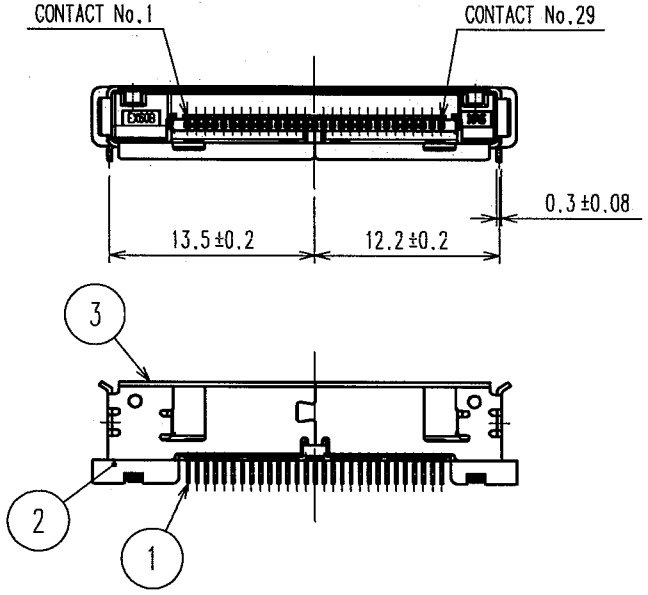

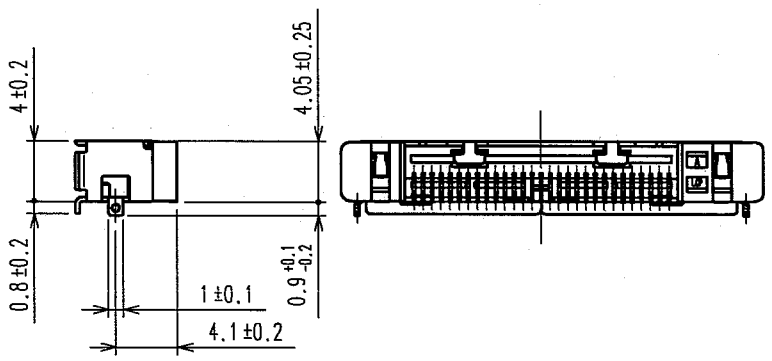

4 DRAWING FOR PACKING(FREE)

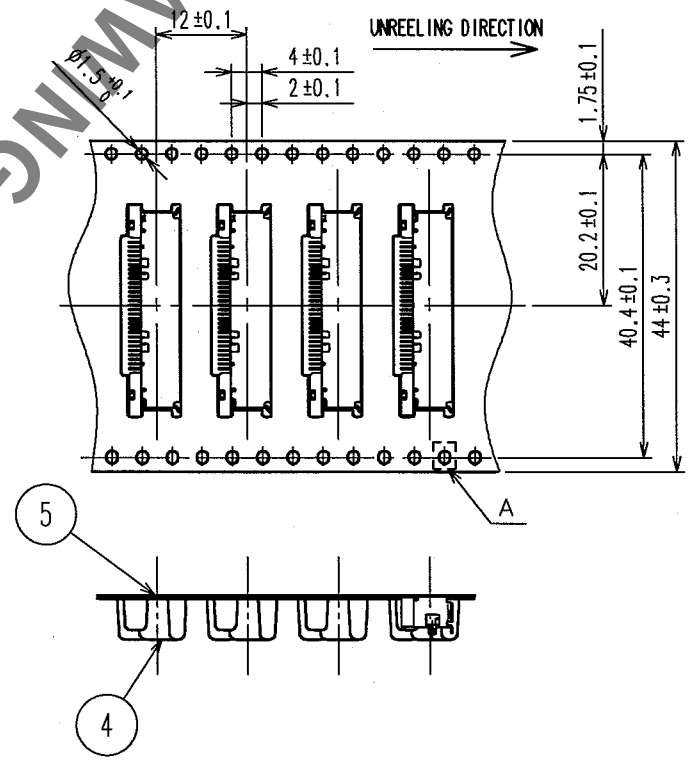

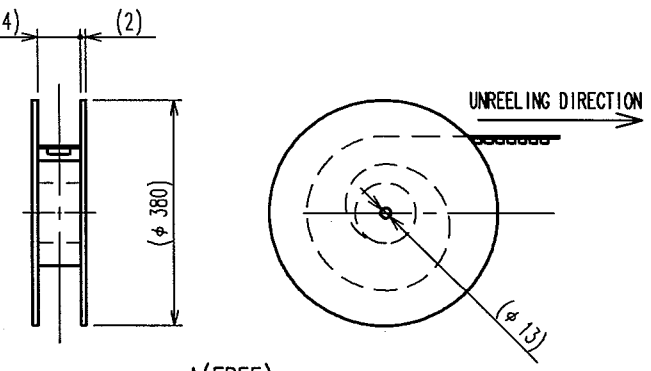

A(FREE)

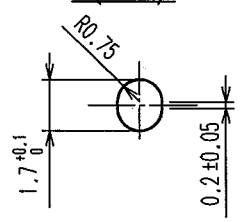

NOTE 1 APPRICABLE CONNECTOR:EX60B-29S(CL232-0613-0)
REFER TO THE DRAWING AND THE SPECIFICATION SHEET OF EX60B-29S
IN CASE OF USING THIS PRODUCT FOR A CRADLE DEVICE.
2 CONTACT CO-PLANARITY IS 0.1 MAX.
3 CONTACT PLATING SPECIFICATION
UNDER : NICKEL PLATING 1μm min
CONTACT : GOLD PLATING 0.2μm min
LEAD : GOLD FLASH PLATING
4 1REEL:1200 PIECES.

HRS DRAWING FOR REFERENCE

NO.	MATERIAL	FINISH, REMARKS	NO.	MATERIAL	FINISH, REMARKS
3	STAINLESS STEEL	NiP0.2μm min+SnP1μm min			
2	LCP	UL94V-0(BLACK)	5	PS	TOP COVER TAPE
1	COPPER ALLOY	3	4	PS	EMBSSED CARRIER TAPE

CODE NO.(OLD)	DRAWN	DESIGNED	CHECKED	APPROVED	RELEASED
	K.Hirohama 05.02.15	K.Hirohama 05.02.15	S.Matsuzaki 05.02.17	S.Matsuzaki 05.02.17	. .

SCALE 2 : 1	DRAWING NO. EDC3-124758	PART NO. EX60B-29P-FL
UNITS mm	HRS HIROSE ELECTRIC CO., LTD	CODE NO. CL232-0612-8 1/1

TO
Q

FORM NO.229