THIS DRAWING IS UNPUBLISHED. RELEASED FOR PUBLICATION
© COPYRIGHT ALL RIGHTS RESERVED.

REVISIONS

P	LTR	DESCRIPTION	DATE	DWN	APVD
	F	REVISED(FC00-0008-03)	JAN.23/03	HS	CS
	G	REVISED(ECR-07-008979)	APR.18/07	YH	JK
	G1	REVISED(ECR-17-012909)	SEP.04/17	YH	YJ

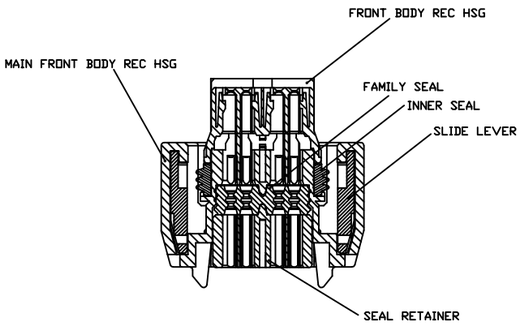

SECT. A-A

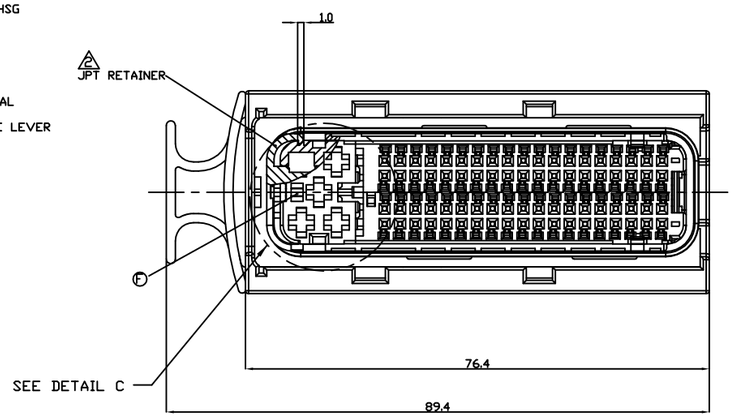

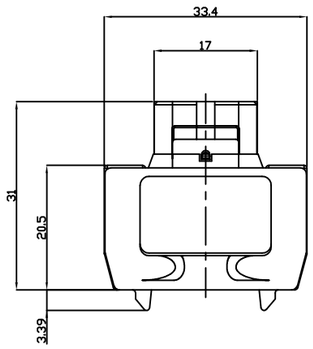

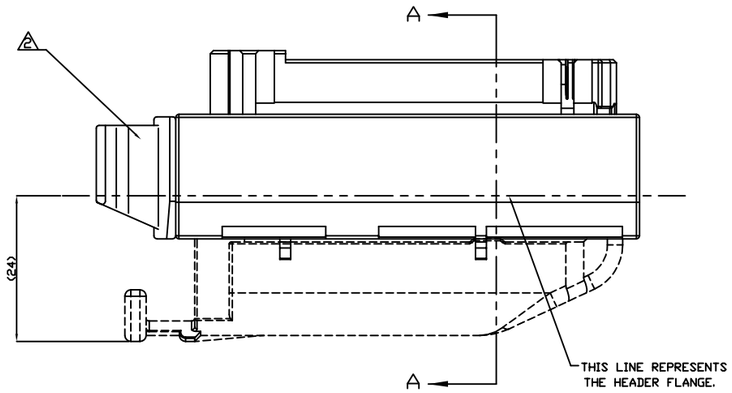

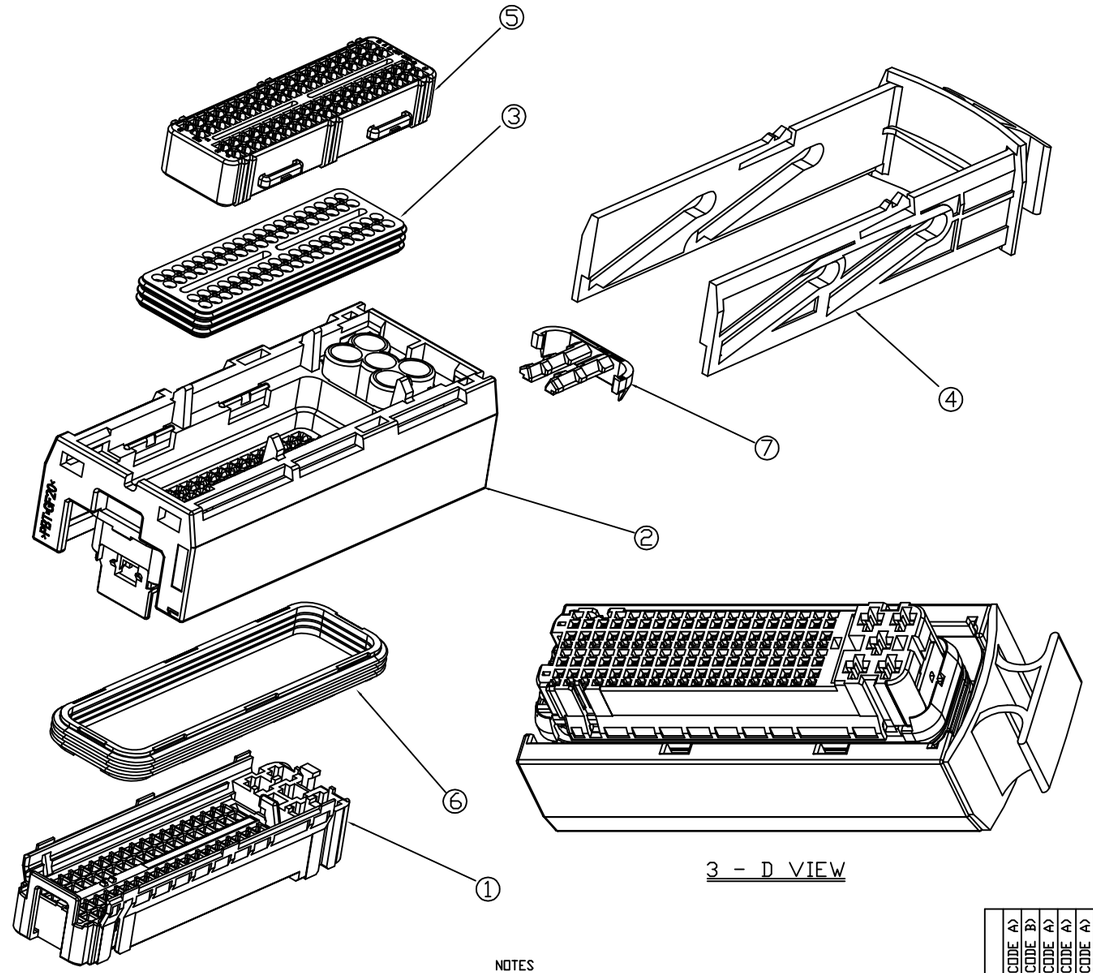

3 - D VIEW

NOTES

1. GENERAL TOLERANCE IS ±0.5
2. CONDITION OF DELIVERY : SLIDE LEVER IN CLOSED POSITION, JPT RETAINER IN OPEN POSITION.
3. SUITABLE FOR WIRE SIZE RANGE:

CONTACT	MQS	JPT
CIRCUIT NO.	6 - 81	1 - 5
WIRE SIZE(mm^2)	0.5 - 0.75	0.5 - 2.5

4. APPLIED COVER HSG P/N: 368389.
5. APPLIED RECEPTACLE CONTACT P/N:

CONTACT	MQS		JPT	
Part NO.	968220	968221	964286	964273
WIRE SIZE(mm^2)	0.5	0.75	0.5 - 1.0	1.0 - 2.5

6. APPLIED HEADER ASSEMBLY P/N: 368146.
7. (G1) APPLIED MQS RETAINER HSG P/N: 368382.

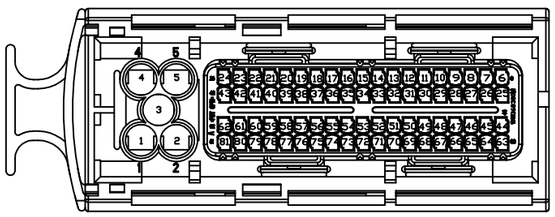

CIRCUIT NUMBER LAYOUT
SCALE(2/1)

368376-4	6,8,10,21,25~28,33,34,41,42, 46~49,53,61,65~68,70,72,74,80,81.	ⒶⒷⒸⒹ
368376-3	14~16,20,30,32~35,37,39, 45~47,53~59,72~75,77.	ⒶⒺ
368376-2	7,9,10,14~16,20,27,30,32~35,37, 39,45~47,52~59,67,68,72~75,77.	Ⓐ
368376-1	-	
PART NUMBER	BLANKED CAVITIES	

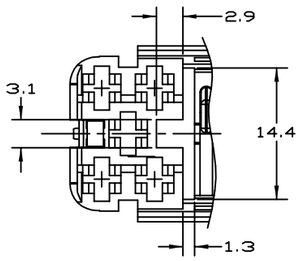

CODE A

Ⓑ DETAIL C
SCALE 3/1

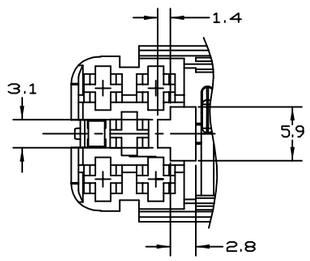

CODE B

NO.	Part NO.	DESCRIPTION	MATERIAL	COLOR	Q'TY					
7	368381-1	JPT RETAINER	PBT-GF30	YELLOW	1	1	1	1	1	1
6	368905-1	INNER SEAL FOR 81P	SILICONE	ORANGE	1	1	1	1	1	1
5	368380-4	SEAL RETAINER FOR 81P	PBT-GF15	BLUE			1			
	368380-3			WHITE				1		
	368380-2			GRAY					1	
	368380-1			BLACK		1				1
4	368379-1	SLIDE LEVER FOR 81P	PA66-GF35	BLACK	1	1	1	1	1	1
3	368904-1	76P FAMILY SEAL	SILICONE	ORANGE		1	1	1	1	1
2	368378-1	MAIN BODY REC. HSG FOR 81P	PBT-GF20	BLACK	1	1	1	1	1	1
1	368377-2	FRONT BODY REC. HSG FOR 81P(CODE B)	PA66-GF15	RED (E)		1				
1	368377-1	FRONT BODY REC. HSG FOR 81P(CODE A)	PA66-GF15	BLACK	1		1	1	1	1

ASS'Y P/N	DISCRIPTION
(G)2-368376-1	81Pos REC. HSG ASS'Y(CODE A)
1-368376-1	81Pos REC. HSG ASS'Y(CODE B)
368376-4	81Pos REC. HSG ASS'Y(CODE A)
368376-3	81Pos REC. HSG ASS'Y(CODE A)
368376-2	81Pos REC. HSG ASS'Y(CODE A)
368376-1	81Pos REC. HSG ASS'Y(CODE A)

THIS DRAWING IS A CONTROLLED DOCUMENT.

DIMENSIONS: MM

3rd ANGLE PROJECTION

TOLERANCE'S UNLESS OTHERWISE SPECIFIED: 0 PLC ±, 1 PLC ±, 2 PLC ±, 3 PLC ±, 4 PLC ±, ANGLES ±

MATERIAL

FINISH

DWN YH MA
CHK YD LEE
APVD YJ YOUN
PRODUCT SPEC 108-61039
APPLICATION SPEC 114-18050, 114-18021-1
WEIGHT

TE Connectivity

NAME 81Pos RECEPTACLE HSG ASSEMBLY

SIZE A1 | CAGE CODE 00779 | DRAWING NO (C)- 368376 | RESTRICTED TO

CUSTOMER DRAWING | SCALE 2:1 | SHEET 1 OF 1 | REV G1

4805 (3/13)