DRAWING MADE IN THIRD ANGLE PROJECTION

© COPYRIGHT 1970 BY AMP INCORPORATED, HARRISBURG, PA. ALL INTERNATIONAL RIGHTS RESERVED. AMP INCORPORATED PRODUCTS COVERED BY U. S. AND FOREIGN PATENTS AND/OR PATENTS PENDING.

LOC	DIST
FT	22

REVISIONS

P	F	ZONE	LTR	DESCRIPTION	DATE	APPROVED
			F	REV PER 0010-0337-95	10-17-95	P.B./
	✓		G	REV PER EC 0320-349-97	25 NOV 97	NS

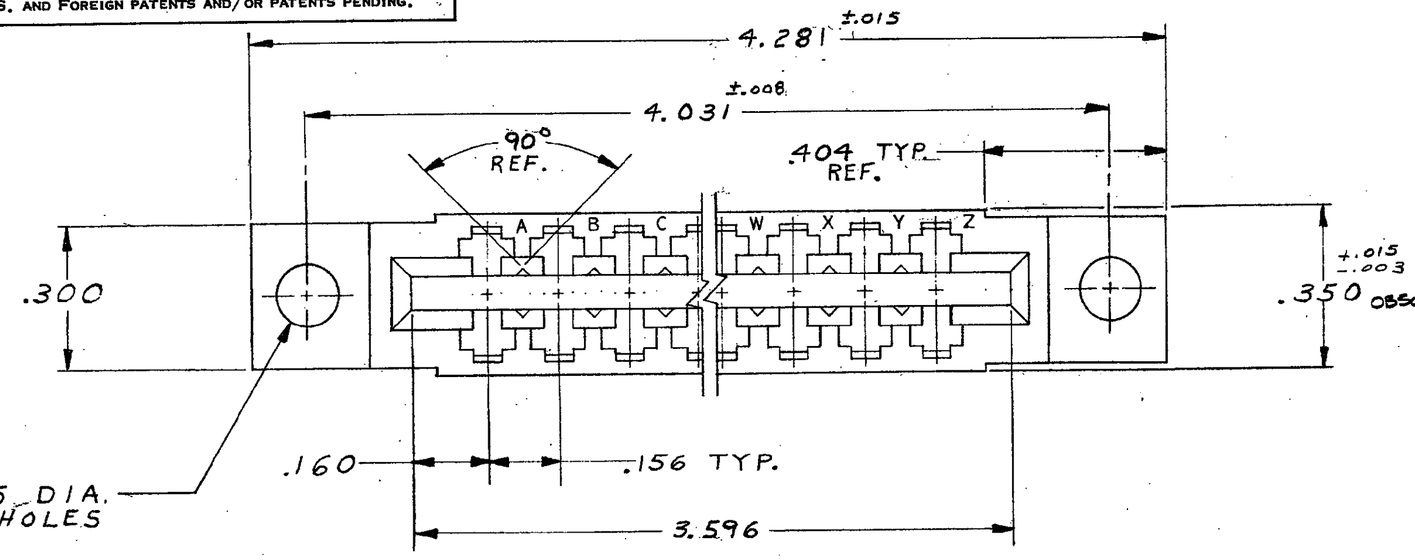

583617-1 1. AS SHOWN

583617-3 1. SAME AS -1 EXCEPT: .156 DIA. MTG. HOLES.

~~583617-6 1. SAME AS -1 EXCEPT: WITH SPECIAL MARKING~~ 2

583617-7 1. SAME AS -3 EXCEPT: .180 DIA. MTG. HOLES.

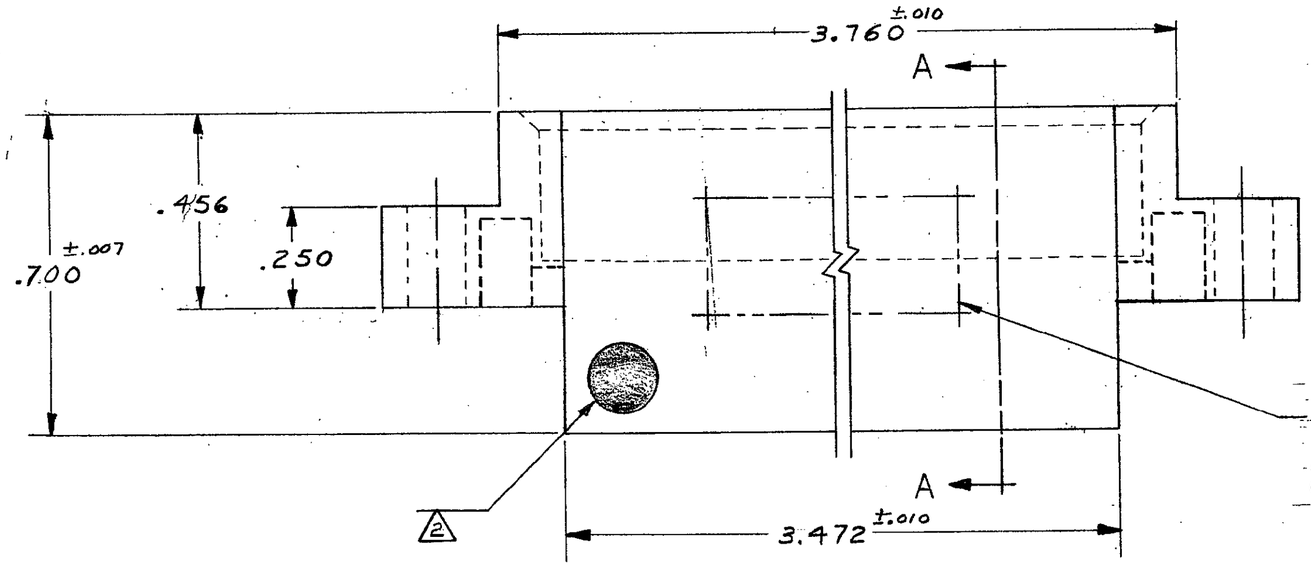

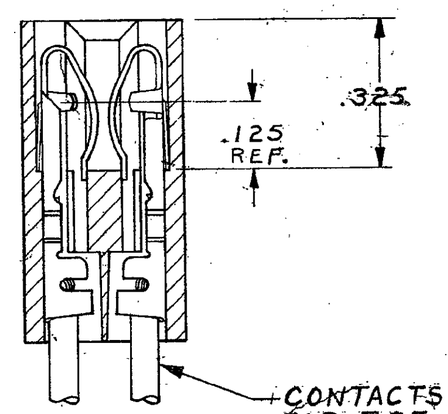

SECT. A-A

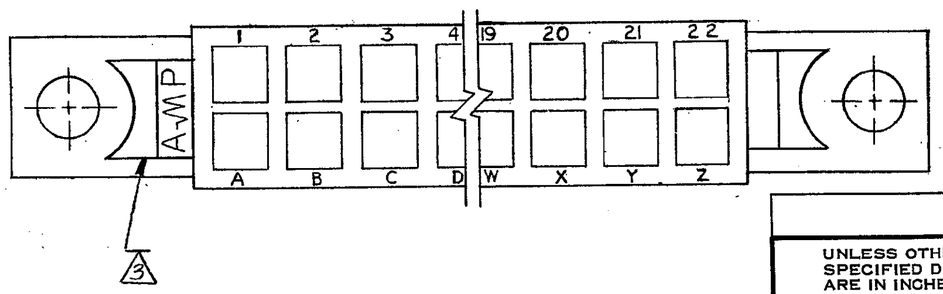

2 1. .055-.070 P.C. BOARD THICKNESS. .250 ±.015 DIA. WHITE DOT INK STAMPED IN LOWER LEFT HAND CORNER ON EITHER SIDE OF HOUSING

3 VOID CORING PERMISSIBLE AT AMP'S OPTION REF ONLY

PART NO

UNLESS OTHERWISE SPECIFIED DIMENSIONS ARE IN INCHES.
TOLERANCES ON:
DECIMALS ±.005
ANGLES ±1°

MATERIAL
GLASS FILLED NYLON OR POLYESTER
COLOR: BLACK

FINISH

CONTRACT NO

DR A.M. SHARPE 11-26-80

CHK D. Bushey 12-2-80

APPD L.S. Shipp 12-2-80

APPD John Pavilla 12-2-80

DSGN APPD

OTHER APPD

AMP | AMP INCORPORATED Harrisburg, Pa.

NAME
HOUSING, AMP LEAF, 22 POS. DUAL

SIZE	CODE IDENT NO	DRAWING NO
C	00779	583617

SCALE 4:1 SHEET 1 OF 1

AMP 1471-6 REV 12-78

CUSTOMER DRAWING