THIS DRAWING IS UNPUBLISHED. RELEASED FOR PUBLICATION -,- .
© COPYRIGHT - BY TYCO ELECTRONICS CORPORATION. ALL RIGHTS RESERVED.

LOC	DIST
—	—

REVISIONS

P	LTR	DESCRIPTION	DATE	DWN	APVD
	K	REV PER ECO 08-021379	8-27-08	CT	KT

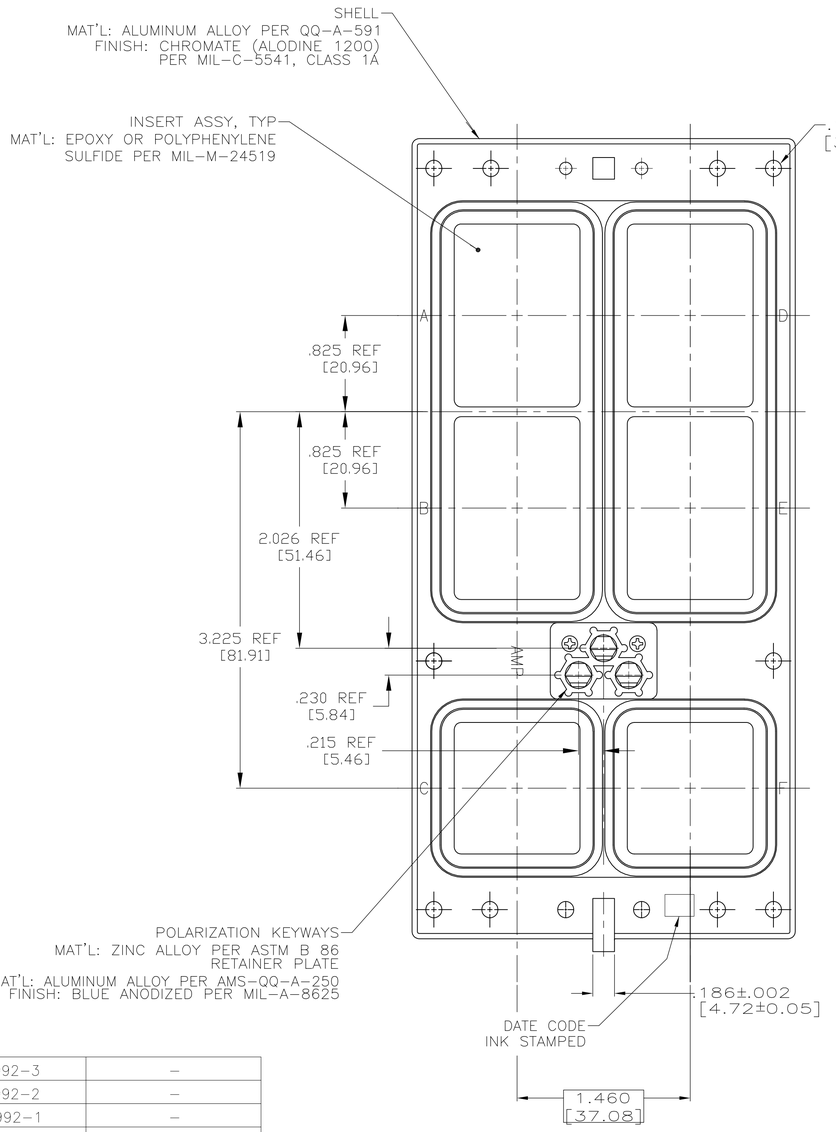

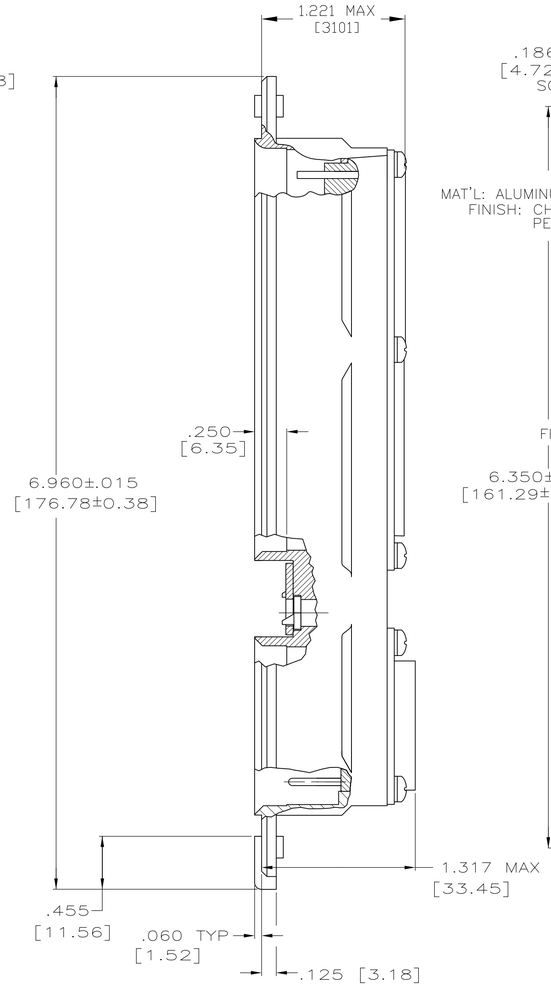

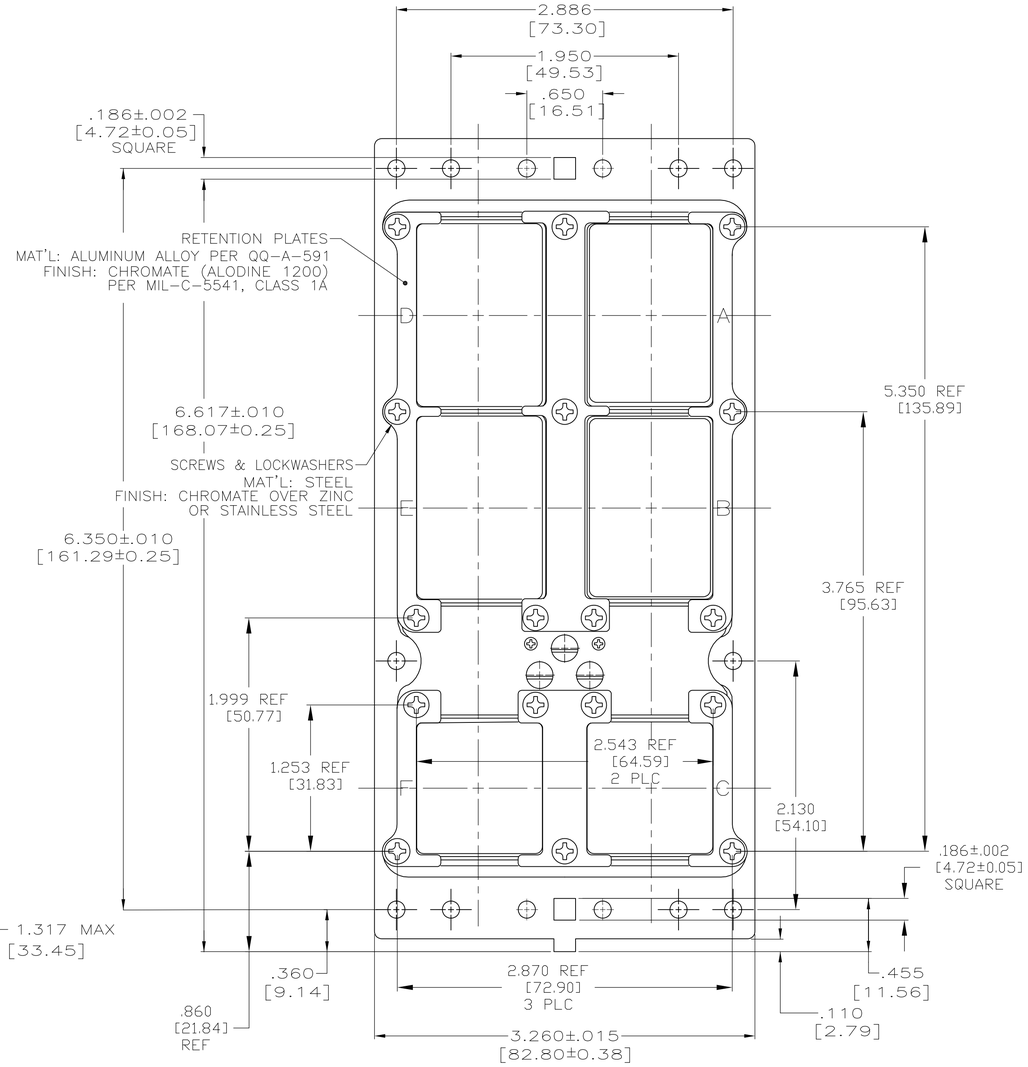

1. CONTACTS ARE SHOWN IN POSITION FOR ILLUSTRATION ONLY. FOR SHIPMENT CONTACTS ARE INCLUDED IN A CONTAINER WITHIN THE CONNECTOR PACKAGE. COAX CONTACTS ARE NOT SUPPLIED AND MUST BE ORDERED SEPARATELY.
2. ALL DIMENSIONS PER ARINC 600 SPECIFICATIONS.
3. POLARIZING KEYS SHOWN IN POSITION 01 FOR ILLUSTRATION ONLY CONNECTORS SHIPPED WITH KEYING PER ORDERING INSTRUCTIONS. CONTACT INSERTS AS SHOWN FOR ILLUSTRATION ONLY. SEE TABLE FOR DISCRIPTIVE NUMBER.
4. FRONT RELEASE FEATURE PERTAINS TO SIGNAL INSERTS ONLY.

PART NUMBER	DESCRIPTIVE NUMBER	PART NUMBER	DESCRIPTIVE NUMBER
2-211992-3	–		
2-211992-2	–		
2-211992-1	–		
2-211992-0	–		
1-211992-9	–		
1-211992-8	–		
1-211992-7	–		
1-211992-6	–		
1-211992-5	–		
1-211992-4	–		
1-211992-3	NIC66J33FA00CA1		
1-211992-2	–		
1-211992-1	NIC66J31FA00CA1		
1-211992-0	–	–	–
211992-9	–	–	–
211992-8	–	–	–
211992-7	NIC66J31FA27FA1	–	–
211992-6	NIC66J31FA03FA1	–	–
211992-5	NIC66J31FA01FH0	–	–
211992-4	NIC66J31FA01FF0	–	–
211992-3	NIC66J32FA00FA1	–	–
211992-2	–	–	–
211992-1	NIC66J31FA01FA1	2-211992-4	NIC66J31FA01FJ0

PRELIMINARY NOT RELEASED FOR PRODUCTION

CONTACTS

.025 SQUARE FRONT RELEASE #22 CONTACTS	–	–	–	.025 ROUND FRONT RELEASE #22 CONTACTS	.500 [12.70]	211431-8
	3	.500 [12.70]	211245-6		.375 [9.53]	211431-6
	2	.375 [9.53]	211245-4		.250 [6.35]	211431-4
	1	.250 [6.35]	211245-2		.150 [3.81]	211431-2
	NUMBER OF WRAPS	MIN POST EXTENSION FROM REAR OF INSERT	AMP PART NUMBER		MIN EXTENSION FROM REAR OF INSERT	AMP PART NUMBER

THIS DRAWING IS A CONTROLLED DOCUMENT.

DIMENSIONS: INCHES

TOLERANCES UNLESS OTHERWISE SPECIFIED:
0 PLC ± –
1 PLC ± –
2 PLC ± –
3 PLC ± .005 [0.13]
4 PLC ± –
ANGLES ± –

MATERIAL: SEE CALLOUTS
FINISH: SEE CALLOUTS

DWN C.C.THOMAS 11-27-95
CHK R.GROSS 4-11-96
APVD R.GROSS 4-11-96
PRODUCT SPEC —
APPLICATION SPEC —
WEIGHT —

Tyco Electronics
Tyco Electronics Corporation
Harrisburg, PA 17105-3608

NAME: CONNECTOR ASSY, SIZE 3
CLASS A, RCPT, ARINC 600
FRONT RELEASE

SIZE A1 | CAGE CODE 00779 | DRAWING NO C-211992 | RESTRICTED TO —

CUSTOMER DRAWING | SCALE 1:1 | SHEET 1 OF 1 | REV K

AMP 4805 REV 31MAR2000

27AUG2008 us016412 H:\docmod\211992_1_c.dwg