Amphenol Pcd Relay Sockets
MIL-PRF-12883

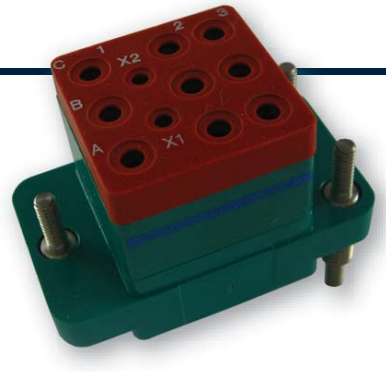

Amphenol Pcd MIL-PRF-12883 Relay Sockets

Amphenol Pcd offers the industry's broadest line of pluggable relay sockets for commercial and miltary airborne, ground and shipboard equipment. Sockets are to MIL-PRF-12883 specifications, plus specialized requirements, and are supplied in a broad range of miltary standard and special configurations and styles for 2 through 25 amp operations.

Amphenol Pcd relay Sockets feature state of the art ultrasonically bonded interfaces between the dielectric components, which eliminate air paths and provide protection against moisture and degradation.

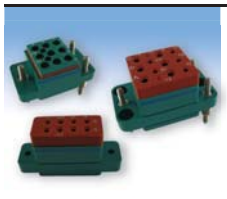

Low Profile Relay Sockets

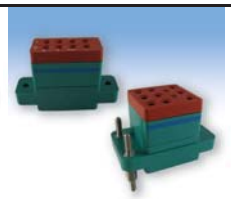

Extended Height Relay Sockets

Microminiature Relay Sockets

Board Mount Relay Sockets

Track Mount Relay Sockets

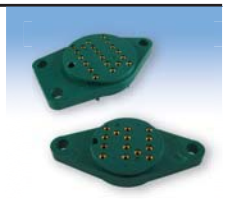

Solder Terminaiton Relay Sockets

Key Features and Benefits

Socket Selection

Reference tanles of QPL listings on Page 5, relays utilized with specific sockets on pages 6-7 and socket recomendations for military and commercial relays on pages 8-9 will assist in and simplify socket selection.

Socket Variations

Low Profile

Low Profile Relay Sockets are provided in all military configurations, are configured to a minimum size and weight, and accept the MIL-C-39029/92 contact family.

Extended Height

Extended Height Sockets are configured to accept the longer MIL-C-39029/5 contact - which is standard on many cylindrical connectors and other avionic interconnect systems - and allow contact standardization.

Mounting Hardware

Sockets are available with either fixed or loose mounting studs. Studs and hardware supplied with standard Ampehnol Pcd QPL-listed sockets are cold rolled steel. Stainless steel is available as an alternate. To specify stainless steel, an "S" is added to both the QPL number and the Amphenol Pcd catalog number.

Mounting Style

Relay sockets can be top or bottom mounted. See appropriate catalog pages for mounting instructions.

Polarization

Relay-to-socket positive polarization is provided by specific contact configurations and/or polarizing pins, in accordance with MIL-Spec requirements.

Contact

Closed entry socket contacts qualified to MIL-C-39029 are utilized and supplied with Amphenol Pcd Relay Sockets. Note: Relay Socket catalog numbers include the appropriate number of contacts as defined in the applicable military specification.

www.amphenolpcd.com Milaero@amphenolpcd.com 1-978-624-3400 72 Cherry Hill Road Beverly, MA 01915

Military Qualified, QPL Listed
Relay Socket Part Numbers

Military Socket P/N	PCD Socket P/N	Page
M12883/40-01	RSL116079	10
M12883/40-02	RSL116081	10
M12883/40-03	RSL116083	10
M12883/40-04	RSL116085	10
M12883/40-05	RSL116087	10
M12883/40-06	RSL116089	10
M12883/40-07	RSL116051	10
M12883/40-08	RSL116053	10
M12883/40-09	RSL116055	10
M12883/40-10	RSL116057	10
M12883/40-11	RSL116059	10
M12883/40-12	RSL116061	10
M12883/40-13	RSE116661	11
M12883/40-14	RSE116663	11
M12883/40-15	RSE116665	11
M12883/40-16	RSE116667	11
M12883/40-17	RSE116669	11
M12883/40-18	RSE116671	11
M12883/40-19	RSE116673	11
M12883/40-20	RSE116675	11
M12883/40-21	RSE116677	11
M12883/40-22	RSE116679	11
M12883/40-23	RSE116681	11
M12883/40-24	RSE116683	11
M12883/41-01	RSL116091	12
M12883/41-02	RSL116093	12
M12883/41-03	RSL116095	12
M12883/41-04	RSL116097	12
M12883/41-05	RSL116099	12
M12883/41-06	RSL116063	12
M12883/41-07	RSL116065	12
M12883/41-08	RSL116067	12
M12883/41-09	RSL116069	12
M12883/41-10	RSL116071	12
M12883/41-11	RSE116685	13
M12883/41-12	RSE116687	13
M12883/41-13	RSE116689	13
M12883/41-14	RSE116691	13
M12883/41-15	RSE116693	13
M12883/41-16	RSE116695	13
M12883/41-17	RSE116697	13
M12883/41-18	RSE116699	13
M12883/41-19	RSE116701	13

Military Socket P/N	PCD Socket P/N	Page
M12883/41-20	RSE116703	13
M12883/44-01	RSE120151	14
M12883/44-02	RSE120153	14
M12883/44-03	RSE120155	14
M12883/44-04	RSE120157	14
M12883/45-01	RSE120159	15
M12883/45-02	RSE120161	15
M12883/45-03	RSE120163	15
M12883/45-04	RSE120165	16
M12883/45-05	RSE120167	16
M12883/45-06	RSE120169	16
M12883/46-01	RSE116747	17
M12883/46-02	RSE116749	17
M12883/46-03	RSE116751	17
M12883/46-04	RSE116753	17
M12883/47-01	RSE116755	18
M12883/47-02	RSE116757	18
M12883/47-04	RSE116761	18
M12883/47-05	RSE116763	18
M12883/47-07	RSL116101	18
M12883/47-08	RSL116103	18
M12883/47-10	RSL116073	18
M12883/47-11	RSL116075	18
M12883/48-01	RSE112061	19
M12883/48-02	RSE112063	19
M12883/48-03	RSL112105	19
M12883/48-04	RSL112101	19
M12883/48-05	RSE112065	19
M12883/48-06	RSE112067	19
M12883/48-07	RSL112107	19
M12883/48-08	RSL112103	19
M12883/52-001	RSE116175	20
M12883/52-002	RSE116185	20
M12883/52-003	RSE116195	20
M12883/53-001	RST145005	20
M12883/54-01	RSE116627	21
M12883/54-02	RSE116631	21
M12883/54-03	RSE116629	21
M12883/54-04	RSE116635	21
M12883/55-01	RSE112035	22
M12883/55-02	RSE112036	22
M12883/55-03	RSE112044	22

Stainless Steel Hardware
To specify Relay Sockets with Stainless Steel hardware, the suffix “S” is added to both the military and Aphenol Pcd part Numbers. For example, M12883/40-01 becomes M12883/40-01S, and the Amphenol Pcd equivalent RSL116079 becomes RSL116079-S.

Relay Socket Cross Reference Chart

Relay to Relay Socket

Military Relay Part Number	Military Socket Part Number	APCD Socket Part Number	Relay Type	Page
M83536/15-002 M83536/16-006, -014, -031, -034 M83726/1, /2, /3, /4, /28, /29, /30, /31* MS27709-2	M12883/40-01 M12883/40-05 M12883/40-07 M12883/40-11 M12883/40-13 M12883/40-17 M12883/40-19 M12883/40-23	RSL116079 RSL116087 RSL116051 RSL116059 RSE116661 RSE116669 RSE116673 RSE116681	4 Pole / 10 Amp	10-11
M83536/17-002, 17-005	M12883/40-02 M12883/40-08 M12883/40-14 M12883/40-20	RSL116081 RSL116053 RSE116663 RSE116675	4 Pole / 10 Amp	10-11
M83536/18-002, -005, -008, -012 M83536/19-002, -005, -008, -012 M83536/20-002	M12883/40-06 M12883/40-12 M12883/40-18 M12883/40-24	RSL116089 RSL116061 RSL116671 RSE116683	4 Pole / 10 Amp	10-11
M83536/21-006, -014, -022, -030 M83536/22-006, -014, -022, -031	M12883/46-01	RSE116747	3 Pole / 10 Amp	17
M83536/25-002 M83536/26-002	M12883/47-01 M12883/47-04 M12883/47-07 M12883/47-10	RSE116755 RSE116761 RSL116101 RSL116073	6 Pole / 10 Amp	18
M6106/27-002	M12883/47-02 M12883/47-05 M12883/47-08 M12883/47-11	RSE116757 RSE116763 RSL116103 RSL116075	6 Pole / 10 Amp	18
MS27742-2	M12883/54-04	RSE116635	3 Pole / 25 Amp	21
MS27743-06, -12, -18, -24	M12883/48-01 M12883/48-02 M12883/48-03 M12883/48-04	RSE112061 RSE112063 RSL112105 RSL112101	3 Pole / 25 Amp	19
MS27743-09, -15, -21, -27	M12883/48-05 M12883/48-06 M12883/48-07 M12883/48-08	RSE112065 RSE112067 RSL112107 RSL112103	3 Pole / 25 Amp	19
Leach Corp. JA-D4E & J	M12883/41-03 M12883/41-08 M12883/41-13 M12883/41-18	RSL116095 RSL116067 RSE116689 RSE116699	2 Pole / 10 Amp	12-13
Leach Corp. KA-D4E & J	M12883/40-04 M12883/40-10 M12883/40-16 M12883/40-22	RSL116085 RSL116057 RSE116667 RSE116679	4 Pole / 10 Amp	10-11

* *Applies to all plug-in dash numbered relays of these documents*

www.amphenolpcd.com Milaero@amphenolpcd.com 1-978-624-3400 72 Cherry Hill Drive Beverly, MA 01915

Relay Socket Cross Reference Chart

Relay to Relay Socket

Military Relay Part Number	Military Socket Part Number	APCD Socket Part Number	Relay Type	Page
M6106/12-002	M12883/54-03	RSE116629	3 Pole / 25 Amp	21
M6106/13-002,-008,-011,-013,-015	M12883/54-01	RSE116627	3 Pole / 25 Amp	21
M6106/13-004	M12883/54-02	RSE116631	3 Pole / 25 Amp	21
M6106/19-004,-007,-012,-017,-022	M12883/55-01, M12883/55-02	RSE112035, RSE112036	1 Pole / 25 Amp	22
M6106/20-002	M12883/55-03	RSE112044	1 Pole / 25 Amp	22
M6106/38-002	M12883/45-04	RSE120165	2 Pole / 5 Amp	15-16
M6106/40-002	M12883/46-02	RSE116749	3 Pole / 5 Amp	17
M83536/1-006,-015,-024,-033 M83536/2-006,-015,-024,-035	M12883/45-01	RSE120159	2 Pole / 5 Amp	15-16
M83536/2-028, M83726/24, /25	M12883/52-001	RSE116175	Track Mount 2 Pole / 5 Amp	20
M83536/5-006,-014, -022, -030 M83536/6-006, -015, -022, -032	M12883/44-01	RSE120151	4 Pole / 5 Amp	14
M83536/6-025	M12883/52-002	RSE116185	Track Mount 4 Pole / 5 Amp	20
M83536/7-022	M12883/44-02	RSE120153	4 Pole / 5 Amp	14
M83536/9, -006, -015, -024, -035 M83536/10-006,-015,-024, -034,-038	M12883/41-01 M12883/41-04 M12883/41-06 M12883/41-09 M12883/41-11 M12883/41-14 M12883/41-16 M12883/41-19	RSL116091 RSL116097 RSL116063 RSL116069 RSE116685 RSE116691 RSE116695 RSE116701	2 Pole / 10 Amp	12-13
M83536/11-002, 004, 007	M12883/41-02 M12883/41-07 M12883/41-12 M12883/41-17	RSL116093 RSL116065 RSE116687 RSE116697	2 Pole / 10 Amp	12-13
M83536/13-002, 005, 008, 012 M83536/14-002	M12883/41-05 M12883/41-10 M12883/41-15 M12883/41-20	RSL116099 RSL116071 RSE116693 RSE116703	2 Pole / 10 Amp	12-13

* *Applies to all plug-in dash numbered relays of these documents*

Relay Sockets

Mates with M83536, M6106, M27709, M83726 Relays

MIL-PRF-12883/40

Extended Height RSL 4 Pole/10 Amp

Operating Range

Temperature:
-65ºC to 125ºC
Insulation Resistance:
1000 Megaohms Min.
Dielectric Withstanding Voltage:
1500 VRMS at Sea Level
500 VRMS at 80,000 ft.
Vibration:
MIL-STD-202, Method 204
Test Condition G
Shock:
MIL-STD-202, Method 213
Test Condition C

Materials

Module Body:
Polyetherimide per ASTM-D5205
Grommet:
Silicone Rubber per A-A-59588
Hardware:
Stainless Steel or Steel w/
Cadmium Chromate Finish
Contact Retainers:
Stainless Steel
Socket Contacts:
Stainless Steel, Hard Gold Plated in
Accordance with SAE-AMS-2422

Socket Configurations

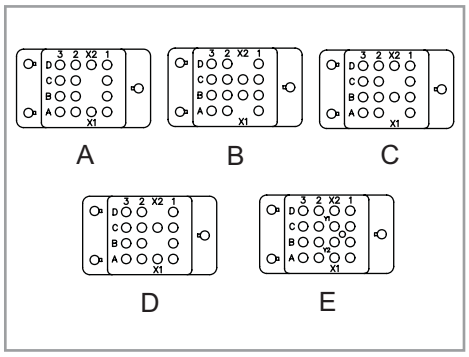

Relay Socket Weight

Relay Socket	Pounds	Grams
Extended Height	.132	60

Recommended Mounting Panel Cutout

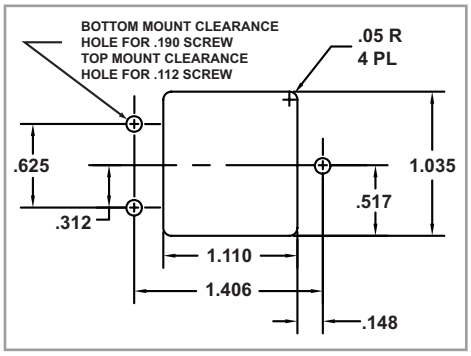

Extended Height Relay Sockets

MIL P/N M12883	APCD P/N	Mounting Stud	QTY	Size[1]	Contact Config. P/N		Mating Relay
/40-01	RSL116079	Loose	14	16/16	/5-116	A	M83536/15-022, M83536/16-006,-014,-031,-034 M83726/1,2,3,4,28,29,30,31*, M27709-02
/40-02	RSL116081	Loose	14	16/16	/5-116	B	M83536/17-002,-005
/40-03	RSL116083	Loose	14	16/16	/5-116	C	
/40-04	RSL116085	Loose	14	16/16	/5-116	D	Leach Corp KA-D4E & J
/40-05	RSL116087	Loose	14	16/20	/5-117	A	M83536/15-022, M83536/16-006,-014,-031,-034 M83726/1,2,3,4,28,29,31,31, N27709-02
/40-06	RSL116089	Loose	16	16/16	/5-116	E	M83536/18-002,005,008,012 M83536/19-002,008,012, M83536/20-002
/40-07	RSL116051	Fixed	14	16/16	/5-116	A	M83536/15-022, M83536/16-006,-014,-031,-034 M83726/1,2,3,4,28,29,31,31, N27709-02
/40-08	RSL116053	Fixed	14	16/16	/5-116	B	M83536/17-002,-005
/40-09	RSL116055	Fixed	14	16/16	/5-116	C	
/40-10	RSL116057	Fixed	14	16/16	/5-116	D	Leach Corp KA-D4E & J
/40-11	RSL116059	Fixed	14	16/20	/5-117	A	M83536/15-022, M83536/16-006,-014,-031,-034 M83726/1,2,3,4,28,29,31,31, M27709-02
/40-12	RSL116061	Fixed	16	16/16	/5-116	E	M83536/18-002,-005,-008,-012 M83536/19-002,-008,-012, M83536/20-002

[1] *Mating End / Wire Barrel*
**Applies to all plug-in type relays of these documents*

Mounting instructions can be found on page 26

Relay Socket Dimensions

Side View

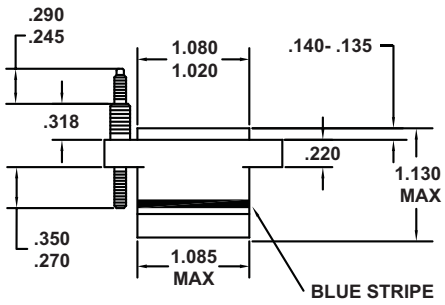

Top View

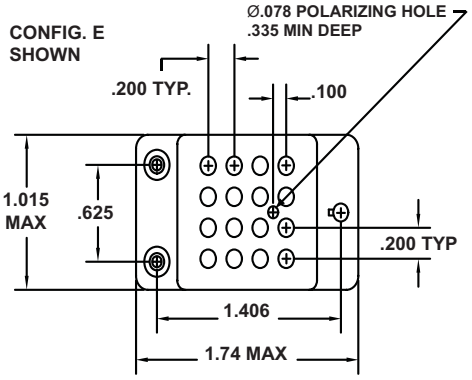

www.amphenolpcd.com Milaero@amphenolpcd.com 1-978-624-3400 72 Cherry Hill Drive Beverly, MA 01915

MIL-PRF-12883/40

Low Profile RSE 4 Pole/10 Amp

Relay Sockets

Mates with M83536, M6106, M27709, M83726 Relays

Operating Range

Temperature:
-65ºC to 125ºC
Insulation Resistance:
1000 Megaohms Min.
Dielectric Withstanding Voltage:
1500 VRMS at Sea Level
500 VRMS at 80,000 ft.
Vibration:
MIL-STD-202, Method 204
Test Condition G
Shock:
MIL-STD-202, Method 213
Test Condition C

Materials

Module Body:
Polyetherimide per ASTM-D5205
Grommet:
Silicone Rubber per A-A-59588
Hardware:
Stainless Steel or Steel w/
Cadmium Chromate Finish
Contact Retainers:
Stainless Steel
Socket Contacts:
Stainless Steel, Hard Gold Plated in
Accordance with SAE-AMS-2422

Low Profile Relay Sockets

MIL P/N M12883	APCD P/N	Mounting Stud	QTY	Size[1]	Contact P/N	Config.	Mating Relay
/40-13	RSE116661	Loose	14	16/16	/92-533	A	M83536/15-022, M83536/16-006,-014,-031,-034 M83726/1,2,3,4,28,29,30,31*, M27709-02
/40-14	RSE116663	Loose	14	16/16	/92-533	B	M83536/17-002, 005
/40-15	RSE116665	Loose	14	16/16	/92-533	C	
/40-16	RSE116667	Loose	14	16/16	/92-533	D	Leach Corp KA-D4E & J
/40-17	RSE116669	Loose	14	16/20	/92-594	A	M83536/15-022, M83536/16-006,-014,-031,-034 M83726/1,2,3,4,28,29,30,31*, M27709-02
/40-18	RSE116671	Loose	16	16/16	/92-533	E	M83836/18-002,-005,-012 M83536/19-002,-005,-008,-012, M83536/20-002
/40-19	RSE116673	Fixed	14	16/16	/92-533	A	M83536/15-022, M83536/16-006,-014,-031,-034 M83726/1,2,3,4,28,29,30,31*, M27709-02
/40-20	RSE116675	Fixed	14	16/16	/92-533	B	M83536/17-002, 005
/40-21	RSE116677	Fixed	14	16/16	/92-533	C	
/40-22	RSE116679	Fixed	14	16/16	/92-533	D	Leach Corp KA-D4E & J
/40-23	RSE116681	Fixed	14	16/20	/92-534	A	M83536/15-022, M83536/16-006,-014,-031,-034 M83726/1,2,3,4,28,29,30,31*, M27709-02
/40-24	RSE116683	Fixed	16	16/16	/92-533	E	M83836/18-002,-005,-012 M83536/19-002,-005,-008,-012, M83536/20-002

[1] *Mating End / Wire Barrel*
**Applies to all plug-in type relays of these documents*

Mounting instructions can be found on page 26

Socket Configurations

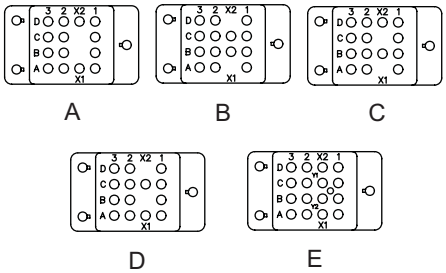

Relay Socket Weight

Relay Socket	Pounds	Grams
Low Profile	.100	45

Recommended Mounting Panel Cutout

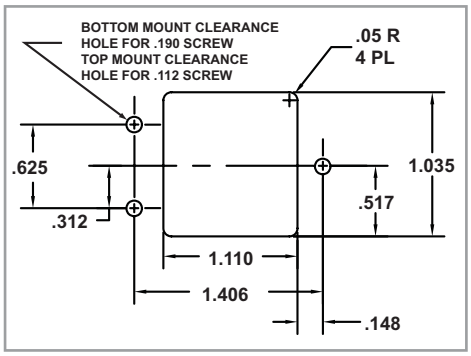

Relay Socket Dimensions

Side View

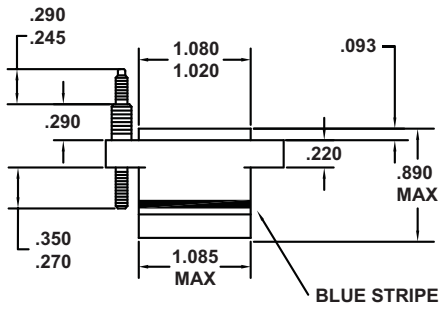

Top View

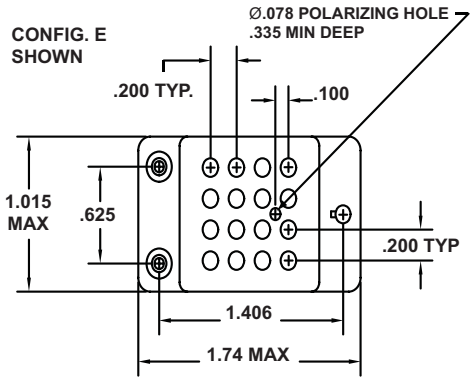

Amphenol Pcd

Relay Sockets

Mates with M83536, M6106 Relays

MIL-PRF-12883/41

Extended Height RSL 2 Pole/10 Amp

Operating Range

Temperature:
-65ºC to 125ºC
Insulation Resistance:
1000 Megaohms Min.
Dielectric Withstanding Voltage:
1500 VRMS at Sea Level
500 VRMS at 80,000 ft.
Vibration:
MIL-STD-202, Method 204
Test Condition G
Shock:
MIL-STD-202, Method 213
Test Condition C

Materials

Module Body:
Polyetherimide per ASTM-D5205
Grommet:
Silicone Rubber per A-A-59588
Hardware:
Stainless Steel or Steel w/
Cadmium Chromate Finish
Contact Retainers:
Stainless Steel
Socket Contacts:
Stainless Steel, Hard Gold Plated in
Accordance with SAE-AMS-2422

Socket Configurations

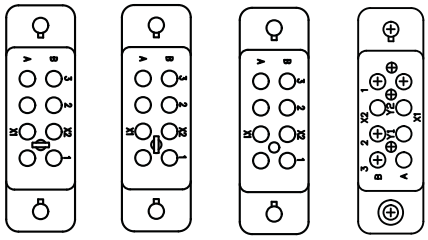

A B C D

Relay Socket Weight

Relay Socket	Pounds	Grams
Extended Height	.073	33

Recommended Mounting Panel Cutout

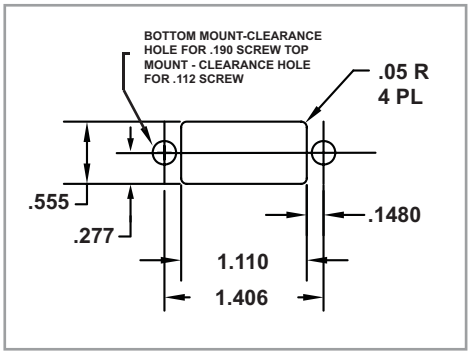

Extended Height Relay Sockets

MIL P/N M12883	APCD P/N	Mounting Stud	QTY	Size*	Contact P/N	Config.	Mating Relay
/41-01	RSL116091	Loose	8	16/16	/5-116	C	M83536/9-006, 015, 024, 035 M83536/10-006, 015, 024, 034, 038
/41-02	RSL116093	Loose	8	16/16	/5-116	B	M83536/11-002, 004, 007
/41-03	RSL116095	Loose	8	16/16	/5-116	A	Leach Corp JA-D4E & J
/41-04	RSL116097	Loose	8	16/20	/5-117	C	M83536/9-006, 015, 024, 035 M83536/10-006, 015, 024, 034, 038
/41-06	RSL116063	Fixed	8	16/16	/5-116	C	M83536/9-006, 015, 024, 035 M83536/10-006, 015, 024, 034, 038
/41-07	RSL116065	Fixed	8	16/16	/5-116	B	M83536/11-002, 004, 007
/41-08	RSL116067	Fixed	8	16/16	/5-116	A	Leach Corp JA-D4E & J
/41-09	RSL116069	Fixed	8	16/20	/5-117	C	M83536/9-006, 015, 024, 035 M83536/10-006, 015, 024, 034, 038
/41-05	RSL116099	Loose	8	16/16	/5-116	D	M83536/13-002,-005,-008,-012
			2	22/22	/101-553		M83536/13-002,-005,-008,-012
/41-10	RSL116071	Fixed	8	16/16	/5-116	D	M83536/13-002,-005,-008,-012
			2	22/22	/101-553		M83536/13-002,-005,-008,-012

*Mating End / Wire Barrel

Mounting instructions can be found on page 25

Relay Socket Dimensions

Side View

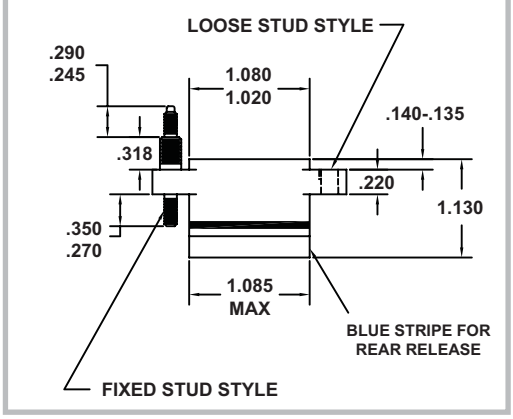

Top View

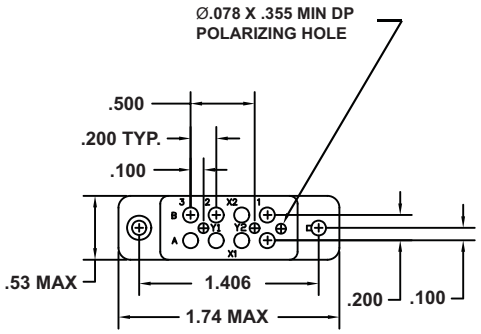

www.amphenolpcd.com Milaero@amphenolpcd.com 1-978-624-3400 72 Cherry Hill Drive Beverly, MA 01915

MIL-PRF-12883/41

Low Profile RSE 2 Pole/10 Amp

Relay Sockets

Mates with M83536, M6106 Relays

Operating Range

Temperature:
-65ºC to 125ºC
Insulation Resistance:
1000 Megaohms Min.
Dielectric Withstanding Voltage:
1500 VRMS at Sea Level
500 VRMS at 80,000 ft.
Vibration:
MIL-STD-202, Method 204
Test Condition G
Shock:
MIL-STD-213, Method 213
Test Condition C

Materials

Module Body:
Polytherimide per ASTM-D5205
Grommet:
Silicone Rubber per A-A-59588
Hardware:
Stainless Steel or Steel w/
Cadmium Chromate Finish
Contact Retainers:
Stainless Steel
Socket Contacts:
Copper Alloy, Hard Gold Plated in
Accordance with SAE-AMS 2422

Low Profile Relay Sockets

MIL P/N M12883	APCD P/N	Mounting Stud	QTY	Size*	Contact P/N	Config.	Mating Relay
/40-11	RSE116685	Loose	8	16/16	/92-533	C	M83536/9-006, 015, 024, 035 M83536/10-006, 015, 024, 034, 038
/40-12	RSE116687	Loose	8	16/16	/92-533	B	M83536/11-002, 004, 007
/40-13	RSE116691	Loose	8	16/16	/92-533	A	Leach Corp JA-D4E & J
/40-14	RSE116693	Loose	8	16/20	/92-534	C	M83536/9-006, 015, 024, 035 M83536/10-006, 015, 024, 034, 038
/40-16	RSE116695	Fixed	8	16/16	/92-533	C	M83536/9-006, 015, 024, 035 M83536/10-006, 015, 024, 034, 038
/40-17	RSE116697	Fixed	8	16/16	/92-533	B	M83536/11-002, 004, 007
/40-18	RSE116699	Fixed	8	16/16	/92-533	A	Leach Corp JA-D4E & J
/40-19	RSE116701	Fixed	8	16/20	/92-534	C	M83536/9-006, 015, 024, 035 M83536/10-006, 015, 024, 034, 038
/41-15	RSE116693	Loose	8	16/16	/92-553	D	M83536/13-002,-005,-008,-012 M83536/13-002,-005,-008,-012
			2	22/22	/92-551		
/41-20	RSE116703	Fixed	8	16/16	/92-553	D	M83536/13-002,-005,-008,-012 M83536/13-002,-005,-008,-012
			2	22/22	/92-551		

*Mating End / Wire Barrel

Mounting instructions can be found on page 26

Socket Configurations

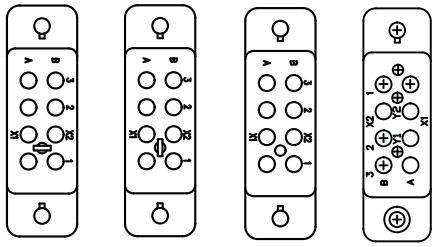

Relay Socket Weight

Relay Socket	Pounds	Grams
Low Profile	.055	25

Recommended Mounting Panel Cutout

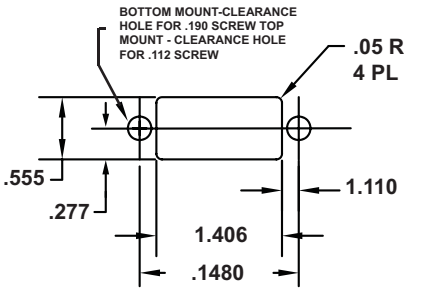

Relay Socket Dimensions

Side View

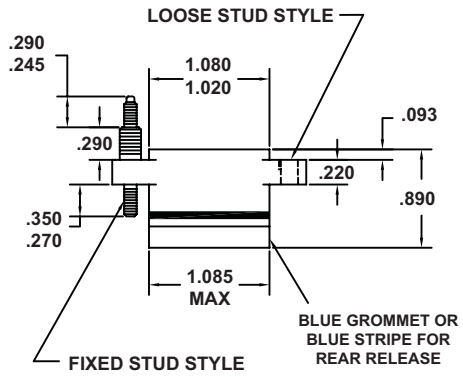

Top View

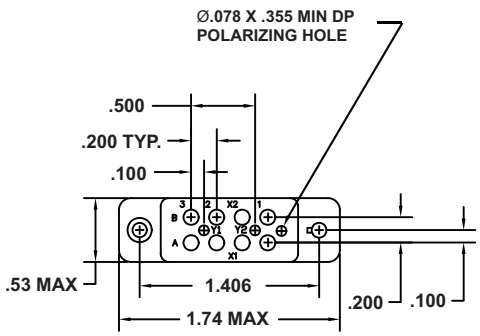

Amphenol Pcd

www.amphenolpcd.com Milaero@amphenolpcd.com 1-978-624-3400 72 Cherry Hill Drive Beverly, MA 01915

Relay Sockets

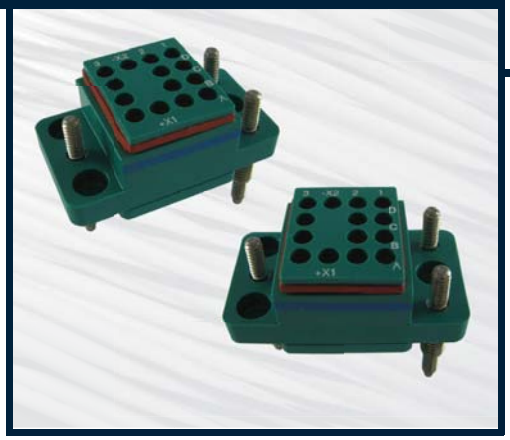

Mates with M6106, M83536 Relays

MIL-PRF-12883/44
RSE 4 Pole/5 Amp

Operating Range
Temperature:
-65ºC to 125ºC
Insulation Resistance:
1000 Megaohms Min.
Dielectric Withstanding Voltage:
1000 VRMS at Sea Level
500 VRMS at 80,000 ft.
Vibration:
MIL-STD-202, Method 204
Test Condition G
Shock:
MIL-STD-202, Method 213
Test Condition C

Materials
Module Body:
Polyetherimide per ASTM-D5205
Grommet:
Silicone Rubber per A-A-59588
Hardware:
Stainless Steel or Steel w/
Cadmium Chromate Finish
Contact Retainers:
Stainless Steel
Socket Contacts:
Copper Alloy, Hard Gold Plated in
Accordance with SAE-AMS 2422

Socket Configurations

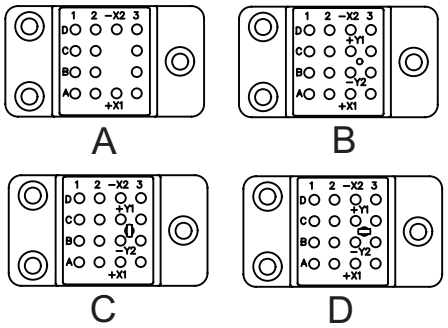

Relay Socket Weight

Relay Socket	Pounds	Grams
Low Profile	.055	25

Recommended Mounting Panel Cutout

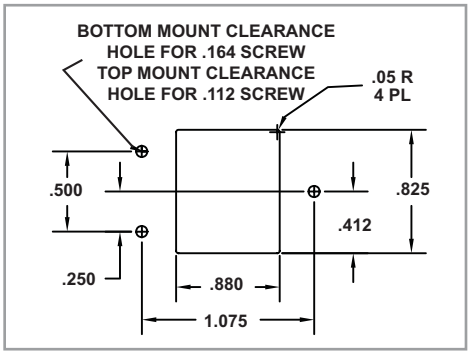

Low Profile Relay Sockets

MIL P/N M12883	APCD P/N	QTY	Size*	Contact P/N	Config.	Mating Relay
/44-01	RSE120151	14	20/20	/101-553	A	M83536/5-006,-014,-022,-030 M83536/6,-006,-014,-022,-032
/44-02	RSE120153	16	20/20	/101-553	B	M83536/7-002
/44-03	RSE120155	16	20/20	/101-553	C	
/44-04	RSE120157	16	20/20	/101-553	D	

*Mating End / Wire Barrel

Mounting instructions can be found on page 26

Relay Socket Dimensions

Side View

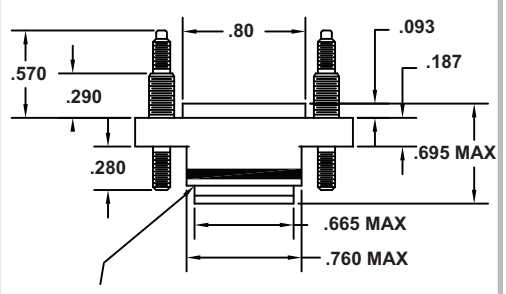

Top View

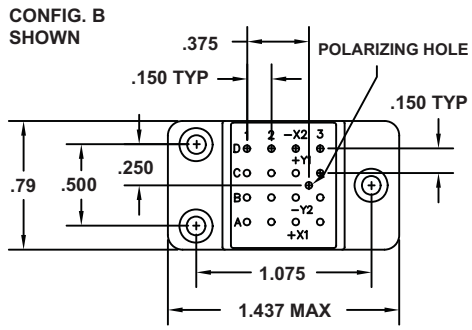

www.amphenolpcd.com Milaero@amphenolpcd.com 1-978-624-3400 72 Cherry Hill Drive Beverly, MA 01915

MIL-PRF-12883/45
RSE 2 Pole/5 Amp

Relay Sockets

Mates with M6106, M83536 Relays

Operating Range
Temperature:
-65ºC to 125ºC
Insulation Resistance:
1000 Megaohms Min.
Dielectric Withstanding Voltage:
1000 VRMS at Sea Level
500 VRMS at 80,000 ft.
Vibration:
MIL-STD-202, Method 204
Test Condition G
Shock:
MIL-STD-202, Method 213
Test Condition C

Materials
Socket Body:
Polyetherimide per ASTM -D5205
Grommet:
Silicone Rubber per A-A-59588
Hardware:
Stainless Steel or Steel w/
Cadmium Chromate Finish
Contact Retainers:
Stainless Steel
Socket Contacts:
Copper Alloy, Hard Gold Plated in
Accordance with SAE-AMS 2422

Low Profile Relay Sockets

MIL P/N M12883	APCD P/N	QTY	Size[1]	Contact P/N	Config.	Mating Relay
/45-01	RSE120159	8	20/20	/101-553	A	M83536/1-006, -015, -024, -033 M83536/2-006, -015, -024, -035
/45-02	RSE120161	8	20/20	/101-553	B	
/45-03	RSE120163	8	20/20	/101-553	C	

*Mating End / Wire Barrel

Mounting instructions can be found on page 26

Socket Configurations

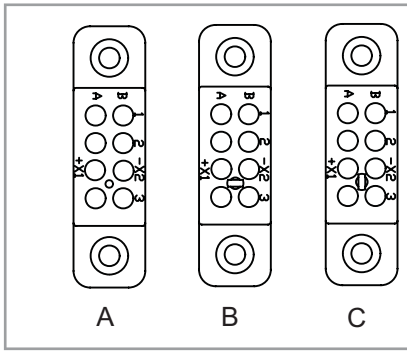

Relay Socket Weight

Relay Socket	Pounds	Grams
Low Profile	.033	15

Recommended Mounting Panel Cutout

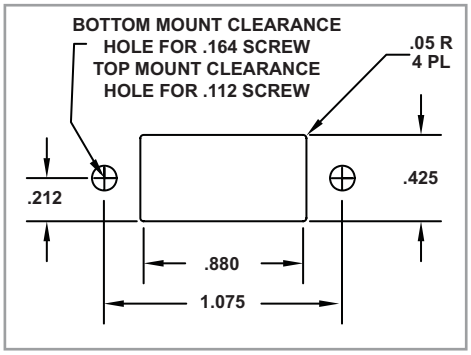

Relay Socket Dimensions

Side View

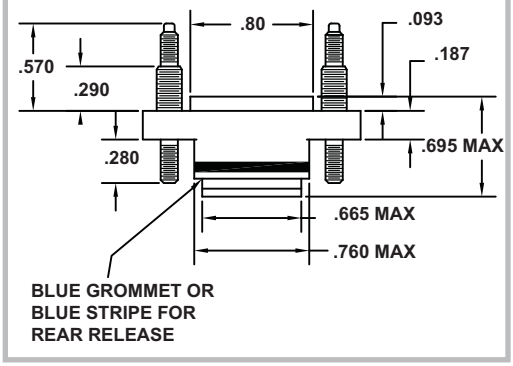

Top View

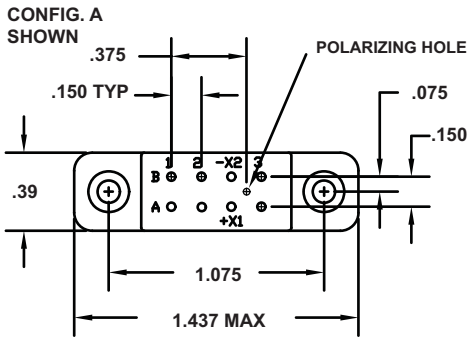

Amphenol Pcd

Relay Sockets

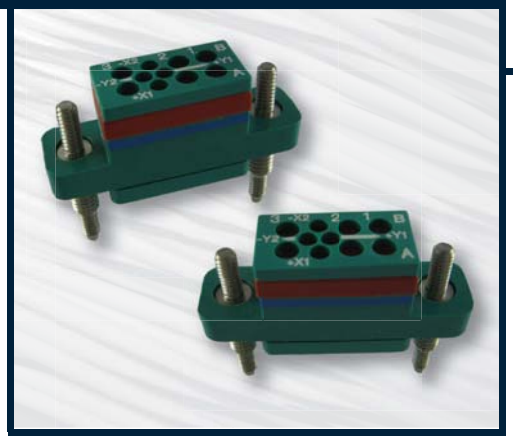

Mates with M6106/38 Relays

MIL-PRF-12883/45

RSE 2 Pole/5 Amp

Operating Range

Temperature:
-65ºC to 125ºC
Insulation Resistance:
1000 Megaohms Min.
Dielectric Withstanding Voltage:
1000 VRMS at Sea Level
500 VRMS at 80,000 ft.
Vibration:
MIL-STD-202, Method 204
Test Condition G
Shock:
MIL-STD-202, Method 213
Test Condition C

Materials

Socket Body:
Polyetherimide per ASTM-D5205
Grommet:
Silicone Rubber per A-A-59588
Hardware:
Stainless Steel or Steel w/
Cadmium Chromate Finish
Contact Retainers:
Stainless Steel
Socket Contacts:
Copper Alloy, Hard Gold Plated in
Accordance with with SAE-AMS 2422

Socket Configurations

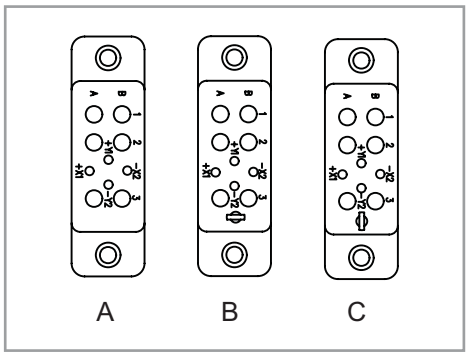

Relay Socket Weight

Relay Socket	Pounds	Grams
Low Profile	.033	15

Recommended Mounting Panel Cutout

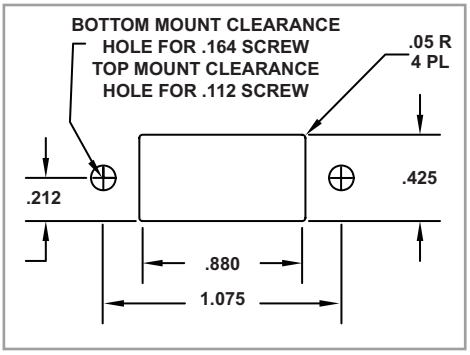

Low Profile Relay Sockets

MIL P/N M12883	APCD P/N	QTY	Size[1]	Contact P/N	Config.	Mating Relay
/45-04	RSE120165	6	20/20	/101-553	A	M6106/38-002
		4	22/22	/101-552		
/45-05	RSE120167	6	20/20	/101-553	B	
		4	22/22	/101-552		
/45-06	RSE120169	6	20/20	/101-553	C	
		4	22/22	/101-552		

[1] *Mating End / Wire Barrel*

Mounting instructions can be found on page 26

Relay Socket Dimensions

Side View

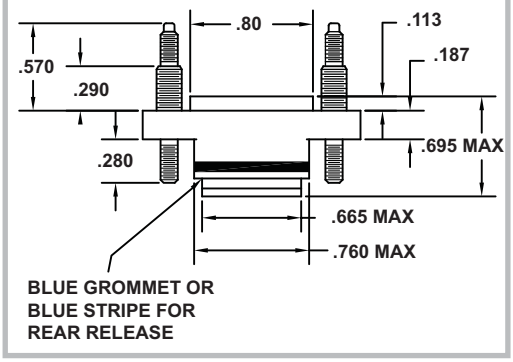

Top View

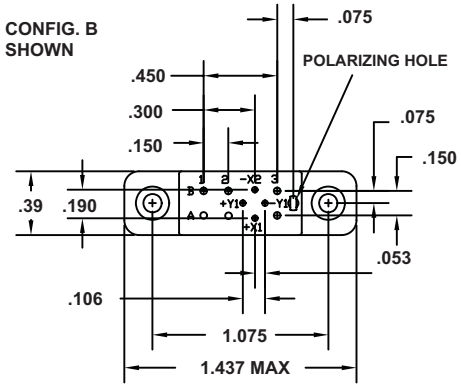

MIL-PRF-12883/46
RSE 3 Pole/10 Amp

Relay Sockets

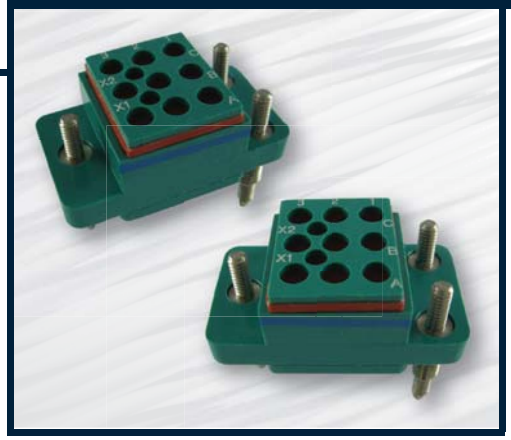

Mates with M83536, M6106 Relays

Operating Range
Temperature:
-65ºC to 125ºC
Insulation Resistance:
1000 Megaohms Min.
Dielectric Withstanding Voltage:
1250 VRMS at Sea Level
500 VRMS at 80,000 ft.
Vibration:
MIL-STD-202, Method 204
Test Condition G
Shock:
MIL-STD-202, Method 213
Test Condition C

Materials
Socket Body:
Polyetherimide per ASTM -D5205
Grommet:
Silicone Rubber per A-A-59588
Hardware:
Stainless Steel or Steel w/
Cadmium Chromate Finish
Contact Retainers:
Stainless Steel
Socket Contacts:
Copper Alloy, Hard Gold Plated in
Accordance with SAE-AMS 2422

Low Profile Relay Sockets

MIL P/N M12883	APCD P/N	QTY	Size[1]	Contact P/N	Config.	Mating Relay
/46-01	RSE116747	9	16/16	/101-554	A	M83536/21-006,-014,-022,-030 M83536/22-006,-014,-022,-030
		2	20/20	/101-553		
/46-02	RSE116749	9	16/16	/101-554	B	M6106/40-002
		2	20/20	/101-553		
/46-03	RSE116751	9	16/16	/101-554	C	
		2	20/20	/101-553		
/46-04	RSE116753	9	16/16	/101-554	D	
		2	20/20	/101-553		

[1] *Mating End / Wire Barrel*

Mounting instructions can be found on page 26

Socket Configurations

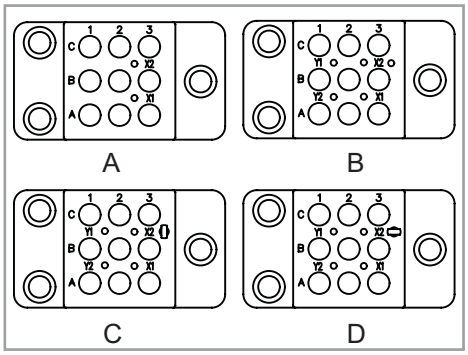

Relay Socket Weight

Relay Socket	Pounds	Grams
Low Profile	.055	25

Recommended Mounting Panel Cutout

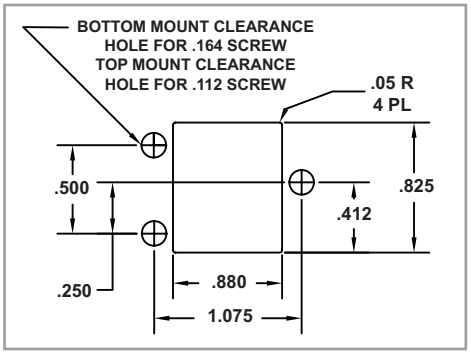

Relay Socket Dimensions

Side View

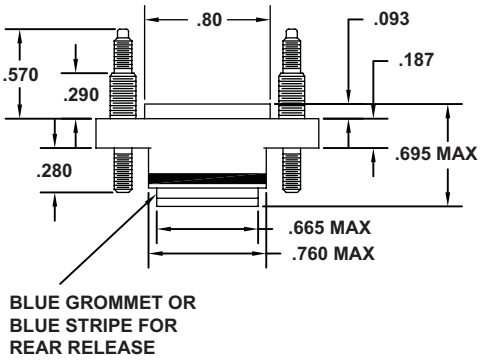

Top View

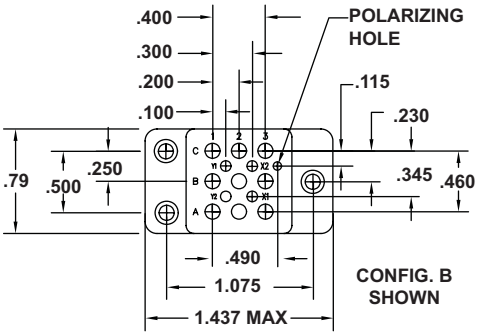

Amphenol Pcd

Relay Sockets

Mates with M83536, M83536 Relays

MIL-PRF-12883/47

RSE/RSL 6 Pole/10 Amp

Operating Range

Temperature:
-65ºC to 125ºC
Insulation Resistance:
1000 Megaohms Min.
Dielectric Withstanding Voltage:
1500 VRMS at Sea Level
500 VRMS at 80,000 ft.
Vibration:
MIL-STD-202, Method 204
Test Condition G
Shock:
MIL-STD-202, Method 213
Test Condition C

Materials

Socket Body:
Polyetherimide per ASTM-D5205
Grommet:
Silicone Rubber per A-A-59588
Hardware:
Stainless Steel or Steel w/
Cadmium Chromate Finish
Contact Retainers:
Stainless Steel
Socket Contacts:
Copper Alloy, Hard Gold Plated in
Accordance with SAE-AMS 2422

Socket Configurations

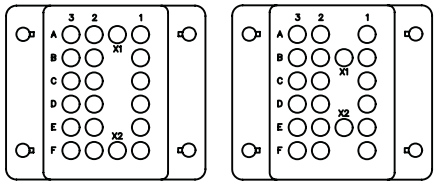

A B

Relay Socket Weight

Relay Socket	Pounds	Grams
Extended Height	.176	80
Low Profile	.144	65

Recommended Mounting Panel Cutout

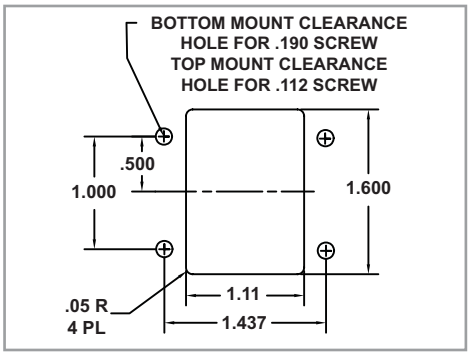

Low Profile Relay Sockets

MIL P/N M12883	APCD P/N	Mounting Stud	QTY	Size[1]	Contact P/N	Config.	Mating Relay
/47-01	RSE116755	Loose	20	16/16	/92-533	A	M83536/25-002, M83536/26-002
/47-02	RSE116757	Loose	20	16/16	/92-533	B	M83536/27-002
/47-04	RSE116761	Fixed	20	16/16	/92-533	A	M83536/25-002, M83536/26-002
/47-05	RSE116763	Fixed	20	16/16	/92-533	B	M83536/27-002

Extended Height Relay Sockets

MIL P/N M12883	APCD P/N	Mounting Stud	QTY	Size[1]	Contact P/N	Config.	Mating Relay
/47-07	RSL116101	Loose	20	16/16	/5-116	A	M83536/25-002, M83536/26-002
/47-08	RSL116103	Loose	20	16/16	/5-116	B	M83536/27-002
/47-10	RSL116073	Fixed	20	16/16	/5-116	A	M83536/25-002, M83536/26-002
/47-11	RSL116075	Fixed	20	16/16	/5-116	B	M83536/27-002

[1] *Mating End / Wire Barrel*

Mounting instructions can be found on page 26

Relay Socket Dimensions

Side View

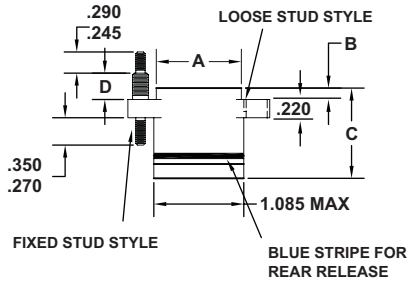

Relay Socket	A	B	C Max	D
Extended Height	1.03	.140-.135	1.25	.318
Low Profile	1.08	.093	.890	.290

Top View

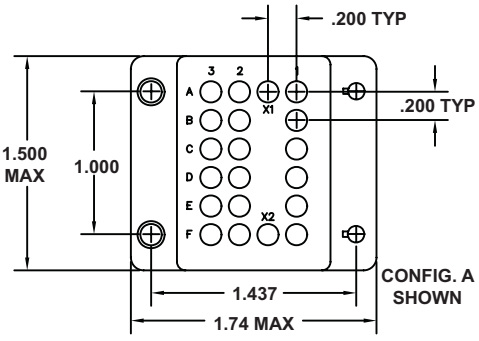

www.amphenolpcd.com Milaero@amphenolpcd.com 1-978-624-3400 72 Cherry Hill Drive Beverly, MA 01915

MIL-PRF-12883/48

RSE/RSL 3 Pole/25 Amp

Relay Sockets

Mates with MS27743 Relays

Operating Range

Temperature:
-65ºC to 125ºC
Insulation Resistance:
1000 Megaohms Min.
Dielectric Withstanding Voltage:
1500 VRMS at Sea Level
500 VRMS at 80,000 ft.
Vibration:
MIL-STD-202, Method 204
Test Condition G
Shock:
MIL-STD-202, Method 213
Test Condition C

Materials

Socket Body:
Polyetherimide per ASTM-D5205
Grommet:
Silicone Rubber per A-A-59588
Hardware:
Stainless Steel or Steel w/
Cadmium Chromate Finish
Contact Retainers:
Stainless Steel
Socket Contacts:
Copper Alloy, Hard Gold Plated in
Accordance with SAE-AMS 2422

Low Profile Relay Sockets

MIL P/N M12883	APCD P/N	Mounting Stud	QTY	Size[1]	Contact P/N	Config.	Mating Relay
/48-01	RSE112061	Loose	2	16/16	/92-533	A	MS27743-06, -12, -18, -24
			9	12/12	/92-535		
/48-02	RSE112063	Fixed	2	16/16	/92-533	A	MS27743-06, -12, -18, -24
			9	12/12	/92-535		
/48-05	RSE112065	Loose	2	16/16	/92-533	B	MS27743-09, -15, -21, -27
			9	12/12	/92-535		
/48-06	RSE112067	Fixed	2	16/16	/92-533	B	MS27743-09, -15, -21, -27
			9	12/12	/92-535		

Extended Height Relay Sockets

MIL P/N M12883	APCD P/N	Mounting Stud	QTY	Size[1]	Contact P/N	Config.	Mating Relay
/48-03	RSL112105	Loose	2	16/16	/5-116	A	MS27743-06, -12, -18, -24
			9	12/12	/5-118		
/48-04	RSL112101	Fixed	2	16/16	/5-116	A	MS27743-06, -12, -18, -24
			9	12/12	/5-118		
/48-07	RSL112107	Loose	2	16/16	/5-116	B	MS27743-09, -15, -21, -27
			9	12/12	/5-118		
/48-08	RSL112103	Fixed	2	16/16	/5-116	B	MS27743-09, -15, -21, -27
			9	12/12	/5-118		

[1] *Mating End / Wire Barrel*

Mounting instructions can be found on page 25

Socket Configurations

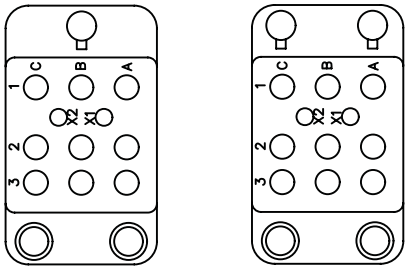

Relay Socket Weight

Relay Socket	Pounds	Grams
Extended Height	.129	55
Low Profile	.109	49

Recommended Mounting Panel Cutout

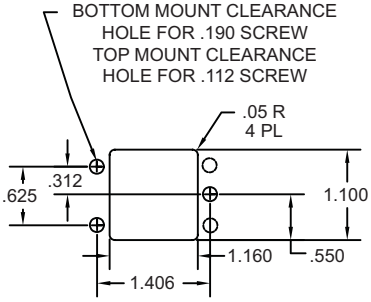

Relay Socket Dimensions

Side View

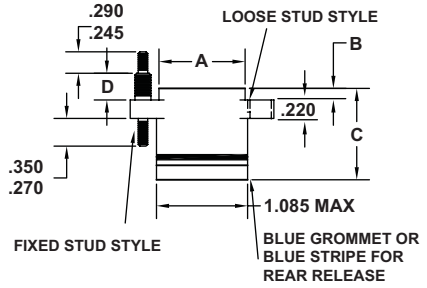

Relay Socket	A	B	C Max	D
Extended Height	1.03	.140-.135	1.25	.318
Low Profile	1.00	.093	.890	.290

Top View

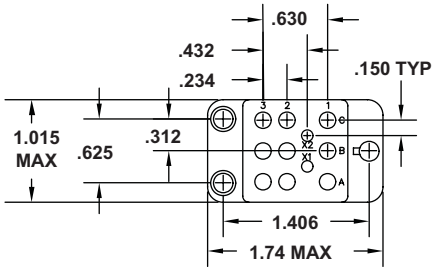

Amphenol Pcd

www.amphenolpcd.com Milaero@amphenolpcd.com 1-978-624-3400 72 Cherry Hill Drive Beverly, MA 01915

MIL-PRF-12883/52, MIL-PRF-12883/53

RSE Track Mount 2, 3, & 4 Pole & Mounting Track

Relay Sockets

Mates with MS83726, M83536 & M6106 Relays

Operating Range

Temperature:
-65ºC to 125ºC
Insulation Resistance:
1000 Megaohms Min.
Dielectric Withstanding Voltage:
1500 VRMS at Sea Level
700 VRMS at 80,000 ft.
Vibration:
MIL-STD-202, Method 204
Test Condition G
Shock:
MIL-STD-202, Method 213
Test Condition C

Materials

Socket Body:
Polyetherimide per ASTM-D5205
Grommet:
Silicone Rubber per A-A-59588
Contact Retainers:
Beryllium Copper
Socket Contacts:
Copper Alloy, Hard Gold Plated in Accordance with MIL-G-45204

Socket Dimensions

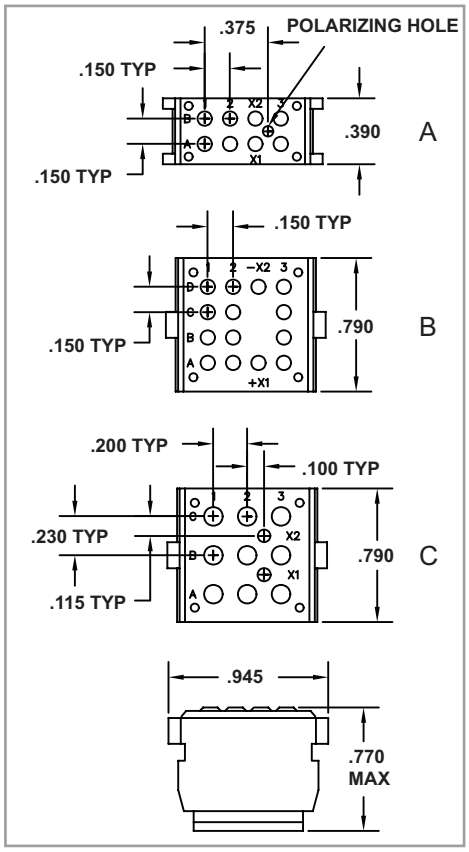

Relay Socket Weight

Relay Socket	Pounds	Grams
RSE116175	.016	7
RSE116185	.031	14
RSE116195	.031	14

Low Profile Relay Sockets

MIL P/N M12883*	APCD P/N*	QTY	Size[1]	Contact P/N	Config.	Mating Relay
/52-001	RSE116175	8	20/20	/101-553	A	M83536/2-028, M83726/27, /25
/52-002	RSE116185	14	20/20	/101-533	B	M8536/6-025
/52-003	RSE116195	9	16/16	/101-554	C	M83536/22-025
		2	20/20	/101-553		

*These Relay Sockets are used in the track mount system with track M12883/53-001, Amphenol Pcd P/N RST145005

[1] *Mating End / Wire Barrel*

M12883/53-001 Mounting Track Dimensions

Track Dimensions

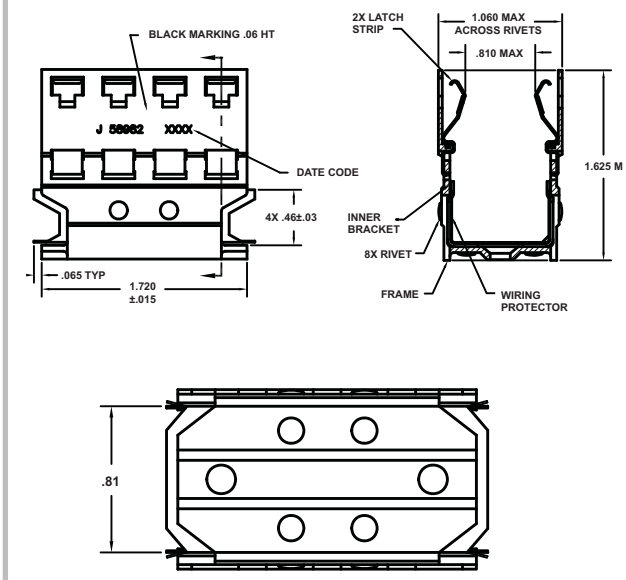

Track Materials

Outer Track:
Aluminum Alloy per QQ-A-225.
Chemical Coating per
MIL-C-5541, Class 3
Inner Brackets and Rivets:
Stainless Steel per QQ-S-766, Passivated
Latch:
Beryllium copper #172 per QQ-C-533
Bright Finish
Wiring Protector:
Aramid Paper per MIL-I-24202
Track Operating Range:
-65ºC to 125ºC

Track Weight

Part Number	Pounds	Grams
RST145005	.053	24

Use tool M6106/32-001 to remove M1288/52 sockets.
Use tool M6106/31-001 to remove relays from this mounting bracket.

MIL-PRF-12883/54

RSE 3 Pole/25 Amp

Relay Sockets

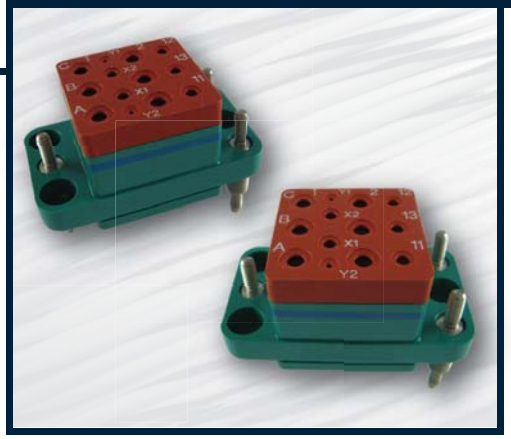

Mates with M6106/12, /13 & MS27742 Relays

Operating Range

Temperature:
-65ºC to 125ºC
Insulation Resistance:
1000 Megaohms Min.
Dielectric Withstanding Voltage:
1500 VRMS at Sea Level
500 VRMS at 80,000 ft.
Vibration:
MIL-STD-202, Method 204
Test Condition G
Shock:
MIL-STD-202, Method 213
Test Condition C

Materials

Socket Body:
Polyetherimide per ASTM-D5205
Grommet:
Silicone Rubber per A-A-59588
Hardware:
Stainless Steel or Steel w/
Cadmium Chromate Finish
Contact Retainers:
Stainless Steel
Socket Contacts:
Copper Alloy, Hard Gold Plated in
Accordance with SAE-AMS 2422

Low Profile Relay Sockets

MIL P/N M12883	APCD P/N	Mounting Stud	QTY	Size*	Contact P/N	Config.	Mating Relay
/54-01	RSE116627	Fixed	5	16/16	/92-533	A	M6106/13-002,-008,-011,-013,-015
			6	12/12	/92-535		
/54-02	RSE116631	Fixed	5	16/16	/92-533	B	M6106/13-004
			6	12/12	/92-535		
/54-03	RSE116629	Fixed	2	20/20	/92-532	C	M6106/12-002
			5	16/16	/92-533		
			6	12/12	/92-535		
/54-04	RSE116635	Fixed	2	20/20	/92-532	D	MS27742-2
			2	16/16	/92-535		
			9	12/12	/92-535		

Mounting instructions can be found on page 26

Socket Configurations

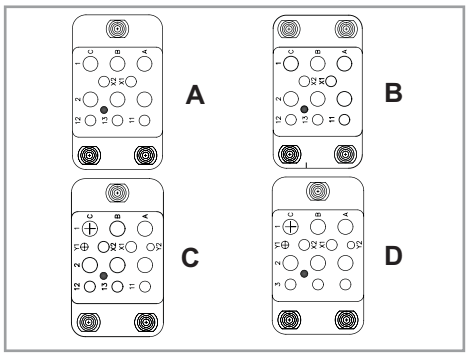

Relay Socket Weight

Relay Socket	Pounds	Grams
RSE116627	.132	60
RSE116631	.132	60
RSE116629	.154	70
RSE116635	.154	70

Recommended Mounting Panel Cutout

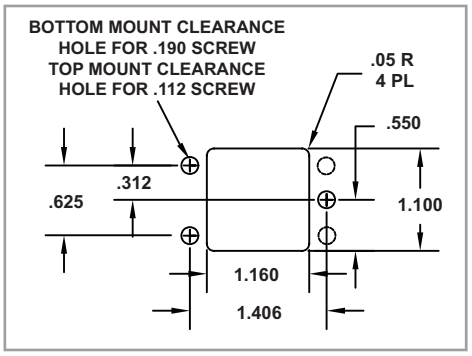

Relay Socket Dimensions

Side View

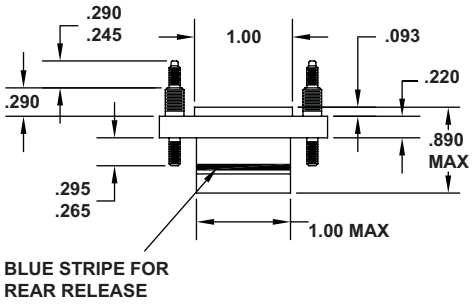

Top View

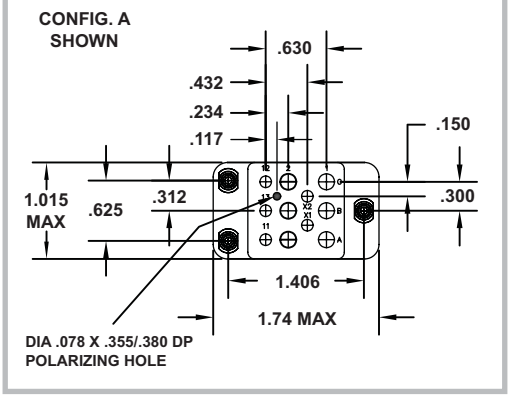

Amphenol Pcd

Relay Sockets

MIL-PRF-12883/55
RSE 1 Pole/25 Amp

Mates with M6106/19, /20 Relays

Operating Range
Temperature:
-65ºC to 125ºC
Insulation Resistance:
1000 Megaohms Min.
Dielectric Withstanding Voltage:
1500 VRMS at Sea Level
500 VRMS at 80,000 ft.
Vibration:
MIL-STD-202, Method 204
Test Condition G
Shock:
MIL-STD-202, Method 213
Test Condition C

Materials
Socket Body:
Polyetherimide per ASTM-D5205
Grommet:
Silicone Rubber per A-A-59588
Hardware:
Stainless Steel or Steel w/
Cadmium Chromate Finish
Contact Retainers:
Stainless Steel
Socket Contacts:
Copper Alloy, Hard Gold Plated in
Accordance with SAE-AMS 2422

Socket Configurations

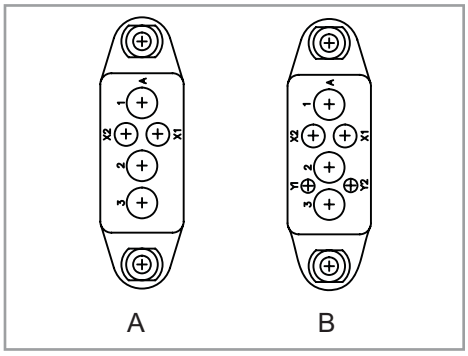

Relay Socket Weight

Relay Socket	Pounds	Grams
Low Profile	.073	33

Recommended Mounting Panel Cutout

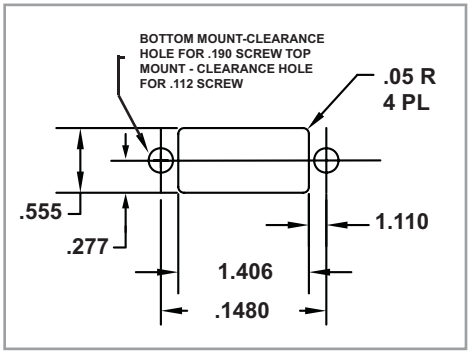

Low Profile Relay Sockets

MIL P/N M12883	APCD P/N	Mounting Stud	QTY	Size[1]	Contact P/N	Config.	Mating Relay
/55-01	RSE112035	Fixed	2	16/16	/92-533	A	M6106/19-004, -007, -012, -017, -022
			3	12/12	/92-535		
/55-02	RSE112036	Fixed	2	16/16	/92-533	A	M6106/19-004, -007, -012, -017, -022
			3	12/12	/92-535		
/55-03	RSE112044	Fixed	2	22/22	/92-531	B	M6106/20-002
			2	16/16	/92-533		
			3	12/12	/92-535		

[1] *Mating End / Wire Barrel*

Mounting instructions can be found on page 26

Relay Socket Dimensions

Side View

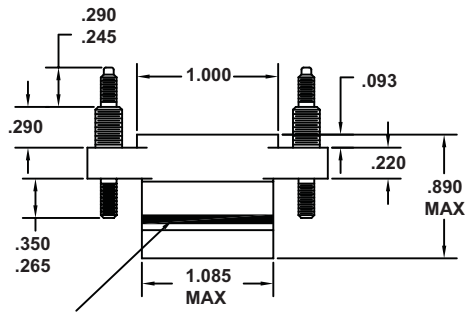

Top View

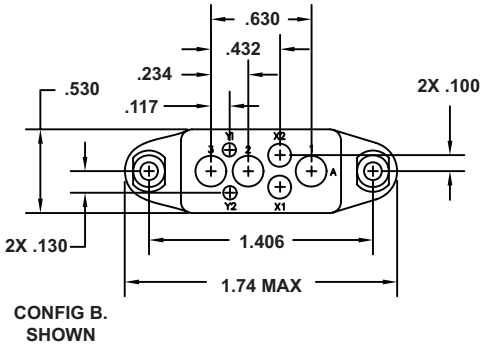

Microminiature Relay Sockets

RSE 2 & 3 Pole, 2 Amp

Relay Sockets

Mates with M39016 & M5757 Relays

Operating Range

Temperature:
-65ºC to 125ºC
Insulation Resistance:
1000 Megaohms Min.
Dielectric Withstanding Voltage:
2500 VRMS at Sea Level
700 VRMS at 80,000 ft.
Vibration:
MIL-STD-202, Method 204
Test Condition G
Shock:
MIL-STD-202, Method 213
Test Condition C

Materials

Module Body:
Polyetherimide per ASTM-D5205
Grommet:
Silicone Rubber per A-A-59588
Hardware:
Stainless Steel or Steel w/
Cadmium Chromate Finish
Contact Retainers:
Stainless Steel
Socket Contacts:
Copper Alloy, Hard Gold Plated in
Accordance with SAE-AMS 2422

Relay Sockets for 2 Pole/ 2 Amp Microminiature Relays

APCD P/N	QTY	Size	Contact P/N	Config.	Mating Relay
RSE120020	8	22/20	CNS109900	A	MIL-R-5757/10-022,-044
RSE120074	8	22/20	CNS109900	B	MIL-R-39016/55-001,-013,-025,-037

Relay Sockets for 3 Pole/ 2 Amp Microminiature Relays

APCD P/N	QTY	Size	Contact P/N	Config.	Mating Relay
RSE120070	14	22/20	CNS109900	C	MIL-R-39016/39-002,-008,-014

Mounting instructions can be found on page 26

Product Description

Microminiature Relay Sockets are designed to mate with M39016 & M5757 Microminiature Relays. Amphenol Pcd supplies three separate relay sockets for customers using Microminiature Relays.

Relay Socket Dimensions

RSE120020

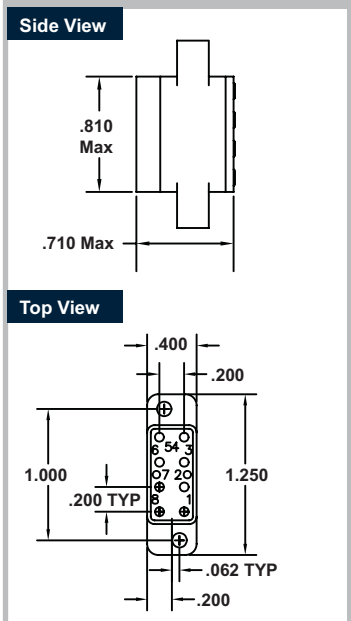

RSE120074

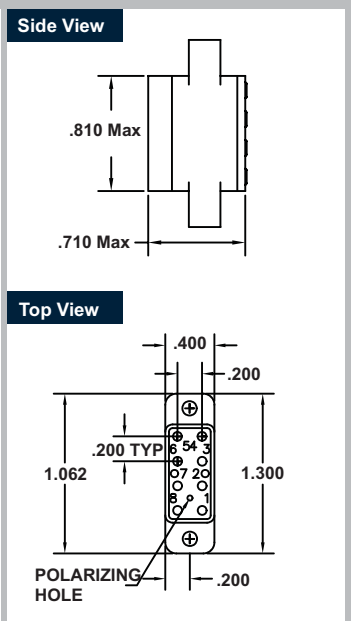

RSE120070

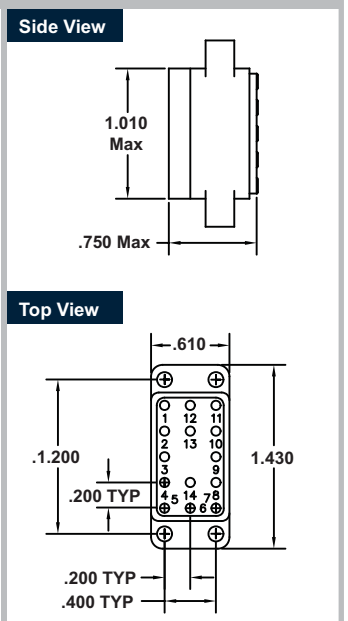

Socket Configurations

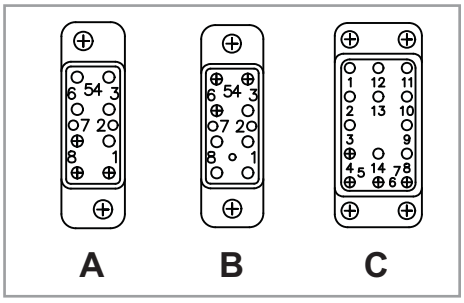

Relay Socket Weight

Relay Socket	Pounds	Grams
RSE120020	.024	11
RSE120074	.024	11
RSN120070	.044	20

Amphenol Pcd

Relay Sockets

Mates with MIL-R-6106 & MS27743 Relays

Board Mount MIL-PRF-12883

RSN 2,4 Pole/10 Amp, 3 Pole/25 Amp

Operating Range

Temperature:
-65ºC to 125ºC
Insulation Resistance:
1000 Megaohms Min.
Dielectric Withstanding Voltage:
1500 VRMS at Sea Level
500 VRMS at 80,000 ft.
Vibration:
MIL-STD-202, Method 204
Test Condition G
Shock:
MIL-STD-202, Method 213
Test Condition C

Materials

Module Body:
Polyetherimide per ASTM-D5205
Hardware:
Stainless Steel or Steel w/
Cadmium Chromate Finish
Contact Retainers:
Stainless Steel
Socket Contacts:
Copper Alloy, Hard Gold Plated in
Accordance with SAE-AMS 2422

Product Description

Product Line of pluggable, PC board mount relay sockets allows separable mounting of relays direct to boards in airborne or ground applications. Polyetherimide body and scalloped mounting flange reduce weight and improve strength. Mounting hardware supplied with connector secures firmly to board and eliminates stress on solder contacts. Gold-plated contacts and solder-dipped contact tails are available. Meets all applicable specifications.

Board Mount Relay Sockets

APCD P/N	QTY	Size[1]	Contact P/N	Config.	Mating Relay
RSN116140	14	16/16	/92-533	A	MIL-R-6106, MS27400
RSN116130	8	16/16	/92-533	B	MIL-R-6106, MS27401
RSN112010	9	12/12	/92-535	C	MIL-R-6106, MS27743
	2	16/16	/92-533		

Mounting instructions can be found on page 26

Socket Configurations

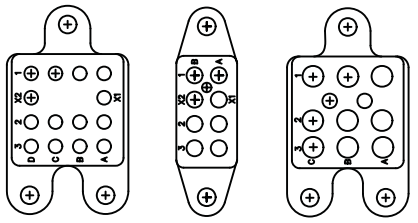

A B C

Relay Socket Weight

Relay Socket	Pounds	Grams
RSN116140	.055	25
RSN116130	.033	15
RSN112010	.057	26

Relay Socket Dimensions

RSN116140

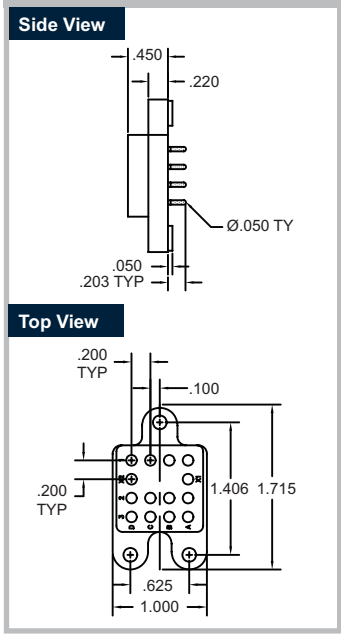

RSN116130

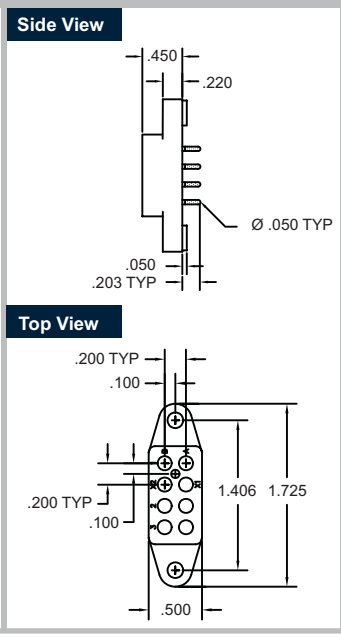

RSN112010

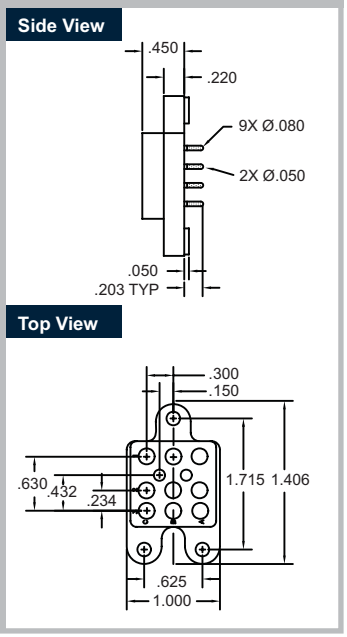

Amphenol Pcd

www.amphenolpcd.com Milaero@amphenolpcd.com 1-978-624-3400 72 Cherry Hill Drive Beverly, MA 01915

Non-Environmental Relay Sockets

Solder Termination

6 Pole/5 Amp, 4 Pole/10 Amp, 2 & 4 Pole/5 Amp, 2 Pole /10Amp

Relay Sockets

Mates with M25027 & Series 9226, 9224, 9225, 9220, 9229, 9927 Leach Corp. Relays

Operating Range

Temperature:
-65ºC to 125ºC
Insulation Resistance:
1000 Megaohms Min.
Dielectric Withstanding Voltage:
1500 VRMS at Sea Level
500 VRMS at 80,000 ft.
Vibration:
MIL-STD-202, Method 204
Test Condition G
Shock:
MIL-STD-202, Method 213
Test Condition C

Materials

Socket Body:
Polyetherimide per ASTM-D5205
Hardware:
Stainless Steel or Steel w/
Cadmium Chromate Finish
Contact Retainers:
Stainless Steel
Socket Contacts:
Copper Alloy, Hard Gold Plated in
Accordance with SAE-AMS 2422

Solder Termination Relay Sockets

APCD P/N	Ref MIL STD Socket	MIL STD Relay	Leach Corp Relay
RSN116820	MS25330	MS25329 (6 Pole/5 Amp)	9226 Series
RSN116890	MS25328	MS25327 (4 Pole/10 Amp)	9224 Series
RSN116891	MS25462	MS25461 (4 Pole/10 Amp)	9225 Series
RSN116800	MS25326	MS25325 (4 Pole/5 Amp)	9220 Series
RSN116810	MS25322	MS25321 (2 Pole/10 Amp)	9229 Series
RSN116825	MS25324	MS25323 (2 Pole/10 Amp)	9227 Series

Mounting instructions can be found on page 26

Relay Socket Dimensions

Solder Termination

RSN116820

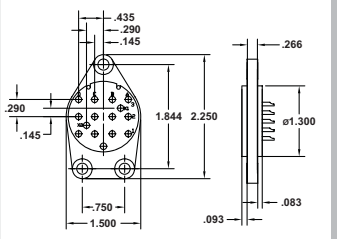

RSN116890

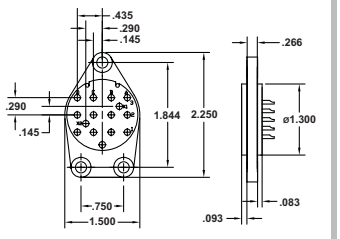

RSN116891

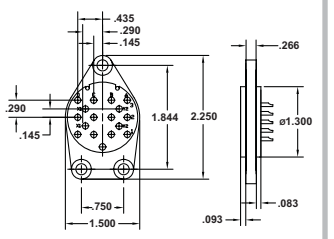

RSN116800

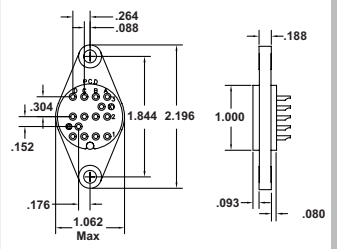

RSN116810

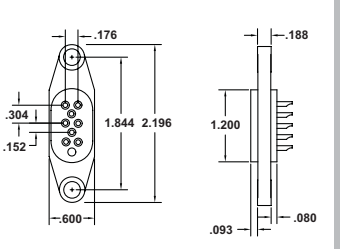

RSN116825

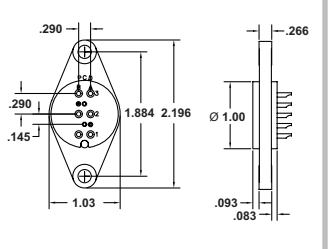

Product Description

Solder Termination Relay Sockets with Polyetherimide body and scalloped mounting flange to reduce weight and improve strength. Mounting hardware supplied with product.

Socket Configurations

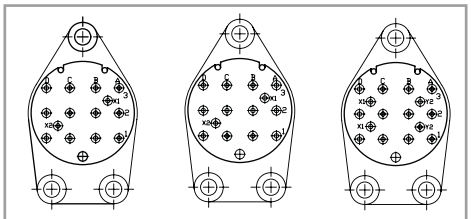

RSN116820 RSN116890 RSN116891

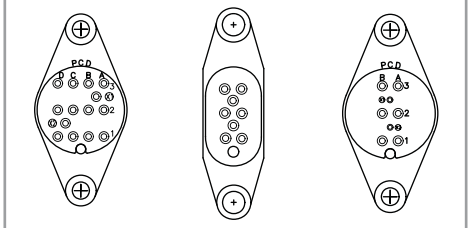

RSN116800 RSN116810 RSN116825

Relay Socket Weight

Relay Socket	Pounds	Grams
RSE120020	.024	11
RSE120074	.024	11
RSN120070	.044	20

Amphenol Pcd

Relay Socket Mounting Instructions

Top Mount & Bottom Mount

Mounting Instructions

MIL-PRF-12883/40, MIL-PRF-12883/41
MIL-PRF-12883/47, MIL-PRF-12883/48
MIL-PRF-12883/54, MIL-PRF-12883/55

TOP MOUNT

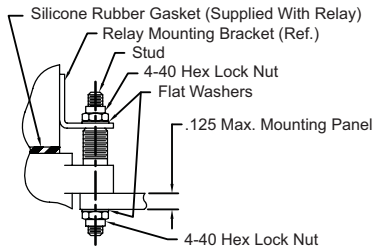

BOTTOM MOUNT

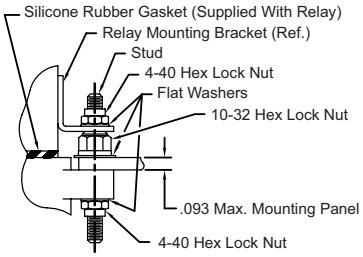

Mounting Instructions

MIL-PRF-12883/44, MIL-PRF-12883/45
MIL-PRF-12883/46

TOP MOUNT

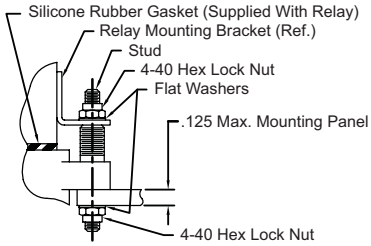

BOTTOM MOUNT

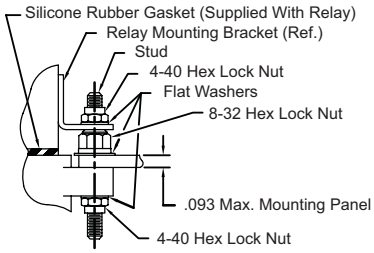

Mounting Instructions

Mircominature Relay Sockets

TOP MOUNT

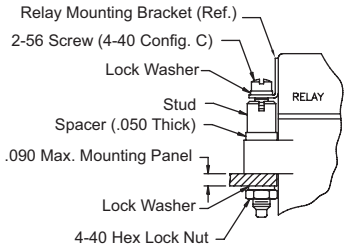

BOTTOM MOUNT

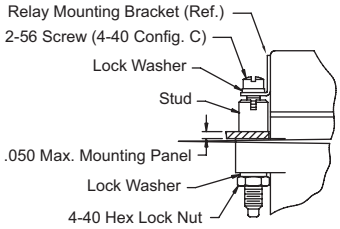

Mounting Instructions

Non-Enviromental Solder Termination Relay Sockets

TOP MOUNT

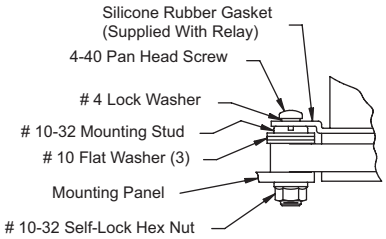
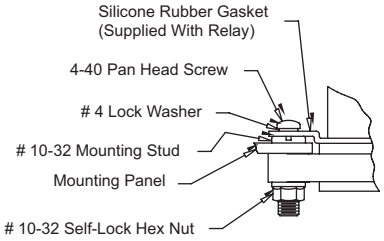
BOTTOM MOUNT