REV.	DESCRIPTION	DATE	APPROVED
E	Engineering Update w/o Changes	02/26/04	M. C.
F	Material Update.	11/10/05	M. C.

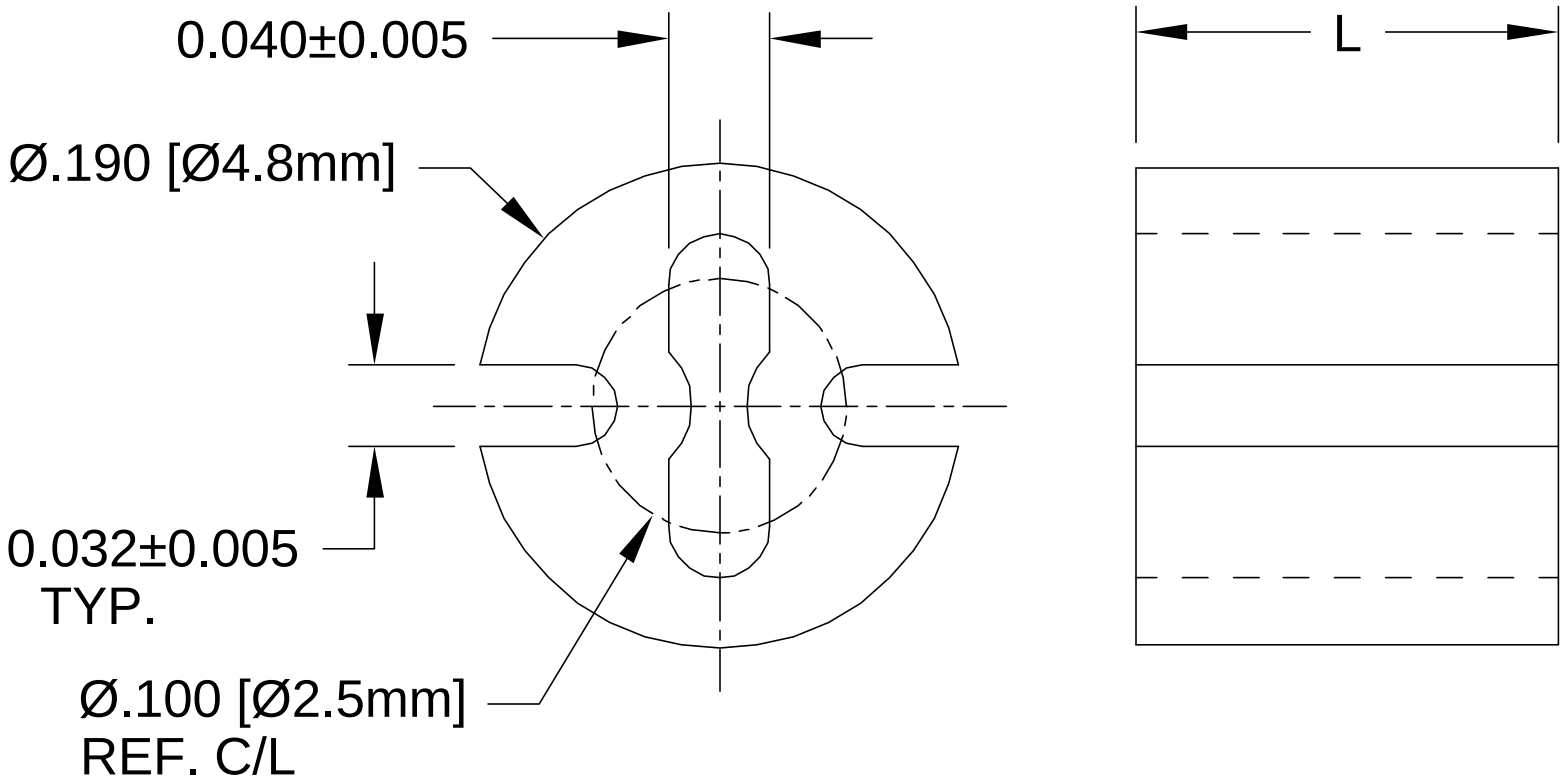

3. TOLERANCE "L" DIMENSION:
   0.030 - 0.500 (1.0 - 12.7mm)±0.005(0.1mm)
   0.505 - 0.750 (12.8 - 19.1mm)±0.008(0.2mm)
   0.755 - 1.250 (19.2 - 31.8mm)±0.015(0.4mm)
2. MATERIAL: PVC ALLOY, 94V-0, BLACK. BIVAR MATERIAL CODE 58-BK.
   CYBERTECH CYBERSHIELD PVC ALLOY, CS1534WX-BLK02N BLACK.
1. GENERAL SPECIFICATIONS: BIVAR EXTRUDED PRODUCT SPECIFICATION BV00-E105.

STANDARD TOLERANCE
(UNLESS OTHERWISE SPECIFIED)

DECIMALS		ANGULAR
.X	± .1	X° ± 1°
.XX	± .01	
.XXX	± .005	

BIVAR®
4 THOMAS, IRVINE, CA. 92618
TEL: (949) 951-8808 FAX: (949) 951-3974

TITLE: EXTRUDED, SELF-RETAINING LED MOUNT

DESIGNED:	DATE:	PART NO:	REVISION:
Shane Irving	02/03/98	ELM 2	F
CHECKED: M. Chen	DATE: 12/17/02	CAGE CODE : 32559	SHEET # 1 OF 1

CAD GENERATED DOCUMENT, DO NOT MEASURE DRAWING.