THIS DRAWING IS UNPUBLISHED. RELEASED FOR PUBLICATION 2016
© COPYRIGHT 1999 BY TE CONNECTIVITY ALL RIGHTS RESERVED.

LOC	DIST

REVISIONS

P	LTR	DESCRIPTION	DATE	DWN	APVD
	B	REVISED PER E.O P16279	03SEP1999	ST	RDR
	C	REVISED PER E.O P18246	22AUG2003	XS	RDR
	D	REVISED PER E.O P20857	04APR2011	AM	RDR
	E	REVISED PER ECO-16-001284	28JAN2016	JA	DM

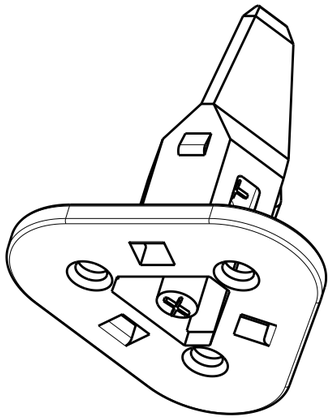

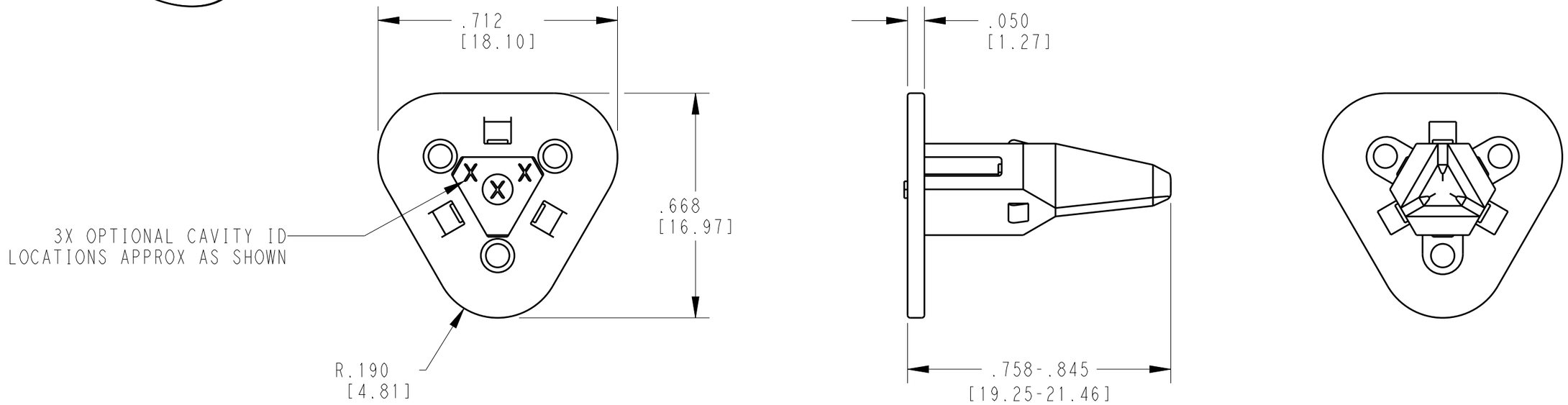

TE INTERNAL PN	DEUTSCH PN
W3S-1939	W3S-1939

2 MATERIAL: PBT 30% GF (BLUE)

1. THIS WEDGE MAY BE USED WITH DT06-3S-XXXX PLUG (XXXX = ALL MODIFICATIONS). CONSULT FACTORY FOR MODIFICATION AND APPLICATION.

NOTES:

THIS DRAWING IS A CONTROLLED DOCUMENT.

DIMENSIONS: INCHES [mm]

TOLERANCES UNLESS OTHERWISE SPECIFIED:
0 PLC ±
1 PLC ±
2 PLC ±
3 PLC ±.025 [0.64]
4 PLC ±
ANGLES ±0°30'0"

MATERIAL 2

FINISH

DWN S.THEIS 27AUG1999
CHK B.BYFORD 04APR2011
APVD S.BEARD 04APR2011
PRODUCT SPEC
APPLICATION SPEC
WEIGHT 0.91g

TE Connectivity

NAME KEYED WEDGE LOCK FOR 3 WAY PLUG COLOR: BLUE DT SERIES

SIZE	CAGE CODE	DRAWING NO	RESTRICTED TO
A3	4AFU8	C-W3S-1939	-

CUSTOMER DRAWING

SCALE 3:1 SHEET 1 OF 1 REV E

1470-19 (3/11)