PART NUMBER	LED COLOR
595-2301-002NF	GREEN
595-2301-007NF	
595-2301-013NF	
595-2401-002NF	YELLOW
595-2401-007NF	
595-2401-013NF	

OPERATING CHARACTERISTICS AT 25°C AMBIENT

CHARACTERISTICS	COLOR	MIN	TYP	MAX	UNITS	TEST CONDITIONS
LUMINOUS INTENSITY	GREEN	—	19.0	—	mcd	I_F = 20 mA
	YELLOW	—	17.0	—		
FORWARD VOLTAGE	GREEN	—	2.1	2.5	V	
	YELLOW	—	2.2	2.5		
REVERSE VOLTAGE	ALL	—	—	4	V	I_R = 100 µA
PEAK WAVELENGTH	GREEN	—	560	—	nm	I_F = 20 mA
	YELLOW	—	580	—		
DOMINANT WAVELENGTH	GREEN	—	567	—		
	YELLOW	589	—	595		

REV	ECN NO	REVISIONS	DRN	CKD	APP	DATE
A	——	NEW RELEASE	RSK	WFB	NO	11/20/14
B	——	MODIFIED GRAPH TO REFLECT VALUE OF 217	VP	SK	NO	5-21-15

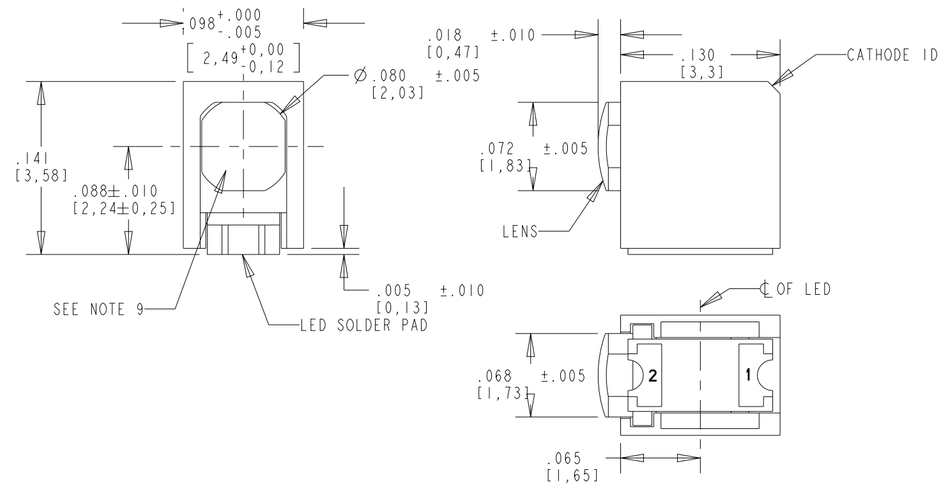

ABSOLUTE MAXIMUM RATINGS AT 25°C AMBIENT	COLOR	VALUE	UNITS
POWER DISSIPATION	GREEN	75	
	YELLOW	75	
DERATE LINEARLY FROM 75°C	GREEN,YELLOW	1.0	mA/°C
CONTINUOUS FORWARD CURRENT	GREEN,YELLOW	30	mA
PEAK FORWARD CURRENT (1/10 DUTY CYCLE, 0.1 ms PULSE WIDTH)	GREEN,YELLOW	70	mA
OPERATING TEMPERATURE	GREEN,YELLOW	-40 TO +100	°C
STORAGE TEMPERATURE	GREEN,YELLOW	-40 TO +120	°C

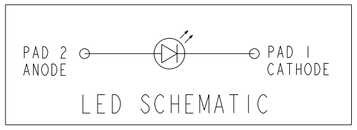

LED SCHEMATIC

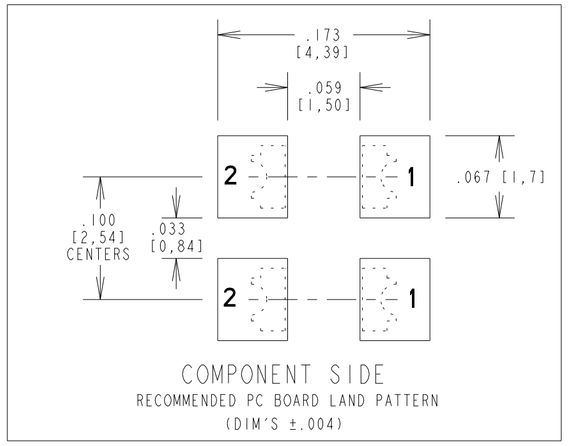

COMPONENT SIDE

RECOMMENDED PC BOARD LAND PATTERN

(DIM'S ±.004)

NOTES:

1- MILLIMETER DIMENSIONS SHOWN FOR REFERENCE ONLY.
2- PAD NUMBERS ARE FOR REFERENCE ONLY, DESIGNATION NON-EXISTENT ON PART.
3- STORAGE CONDITIONS FOR TAPED PRODUCT: RE-TAPING MAY BE NECESSARY FOR PRODUCTS STORED MORE THAN TWELVE MONTHS.
4- ORDER QUANTITY IS LED ASSEMBLIES, NOT REELS
5- ...-002NF SUFFIX MEANS PARTS ARE PACKED ON A 20 pc SAMPLE STRIP
...-007NF SUFFIX MEANS PARTS ARE PACKED ON A 7 INCH REEL, 600 pcs/REEL
...-013NF SUFFIX MEANS PARTS ARE PACKED ON A 13 INCH REEL, 2300 pcs/REEL
6- DIALIGHT PART NUMBERS = 595-2x01-002NF, 595-2x01-007NF, 595-2x01-013NF
7- PLACE MOISTURE SENSITIVITY LEVEL "3" LABEL ON 595-2301-002NF, 595-2301-007NF, 595-2301-013NF, 595-2401-002NF, 595-2401-007NF, 595-2401-013NF. VACUUM SEAL BAG.
8- PACKAGE ONE HUMIDITY INDICATOR CARD (P/N 9100-999-0662-99) PER BAG.
9- PER LENS INSPECTION PROCEDURE 01-225 THIS AREA CAN HAVE PORTIONS MISSING OF UP TO 50%. NON-CRITICAL AREA BELOW LENS.

RoHS COMPLIANT REFLOW PROFILES

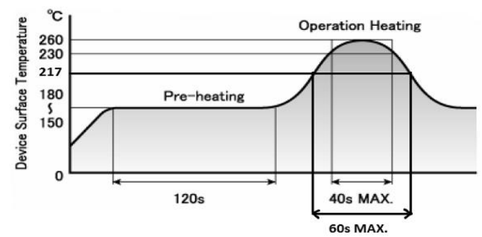

TAPING SPECIFICATION

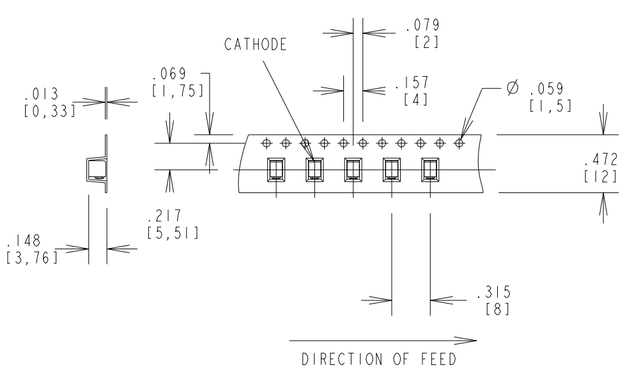

TOLERANCE: .004 UNLESS OTHERWISE SPECIFIED

MILLIMETER DIMENSIONS SHOWN FOR REFERENCE ONLY

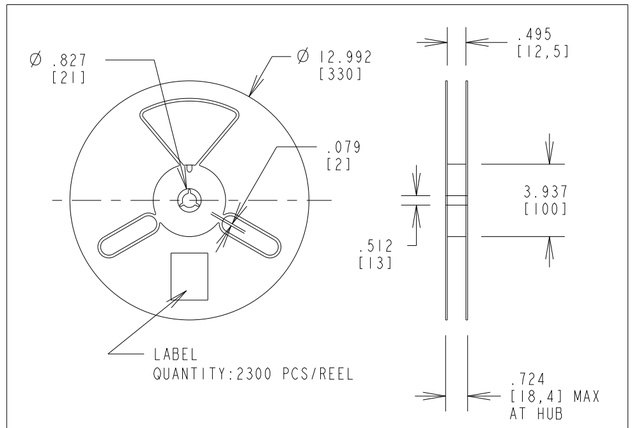

13 INCH DIA. REEL SPECIFICATIONS

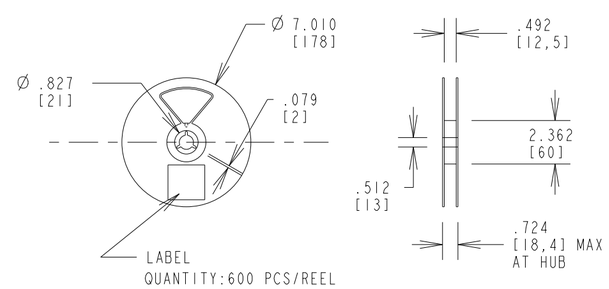

7 INCH DIA. REEL SPECIFICATIONS

RoHS Compliant 595-2X01-0XXNF Surface Mount CBI

Part Numbers with the "F" suffix ending are RoHS Compliant.
Example: 595-2301-002NF
Packaging is marked with "RoHS Compliant" label or equivalent markings. Parts can be wave soldered, dip soldered, or hand soldered usingtypical lead-free soldering process with max 260°C temp. for 5 sec.

THIS DRAWING AND THE CONTENTS HEREIN ARE CONFIDENTIAL AND THE SOLE PROPERTY OF DIALIGHT. REPRODUCTION OF THIS DRAWING OR CONSTRUCTION OF ANY PARTS WITHIN THIS DRAWING ARE FORBIDDEN WITHOUT THE WRITTEN CONSENT OF DIALIGHT.

SCALE: DRAWING SCALE

ALL DIM'S IN: INCHES (MM)

TOLERANCES: UNLESS OTHERWISE SPECIFIED
FRACTIONS: ±1/64
DECIMALS (.XX): ±.01
DECIMALS (.XXX): ±.005
DECIMALS (.XXXX): ±.0005
ANGLES: ±1°

FINISH:

DRAWING NUMBER: C-18127

REV: A

TITLE: SURFACE MOUNT CBI RoHS COMPLIANT

MATERIAL

Dialight
1501 ROUTE 34 SOUTH
FARMINGDALE, NJ 07727

FSCM 83330

SHEET 1 OF 1

FAMILY TABLE: