THIS DRAWING IS UNPUBLISHED. RELEASED FOR PUBLICATION ,19 .
© COPYRIGHT 19 BY AMP INCORPORATED. ALL RIGHTS RESERVED.

LOC	DIST
AJ	16

REVISIONS

P	LTR	DESCRIPTION	DATE	DWN	APVD
	0	RELEASE PER OU20-0533-00	20SEP00	MO	JH

1. BERYLLIUM COPPER PER ASTM-B-196.
2. BRASS PER ASTM-B-453 OR ASTM-B-16.
3. PLATED WITH .000050 GOLD PER MIL-G-45204 OVER .000050 NICKEL PER QQ-N-290.

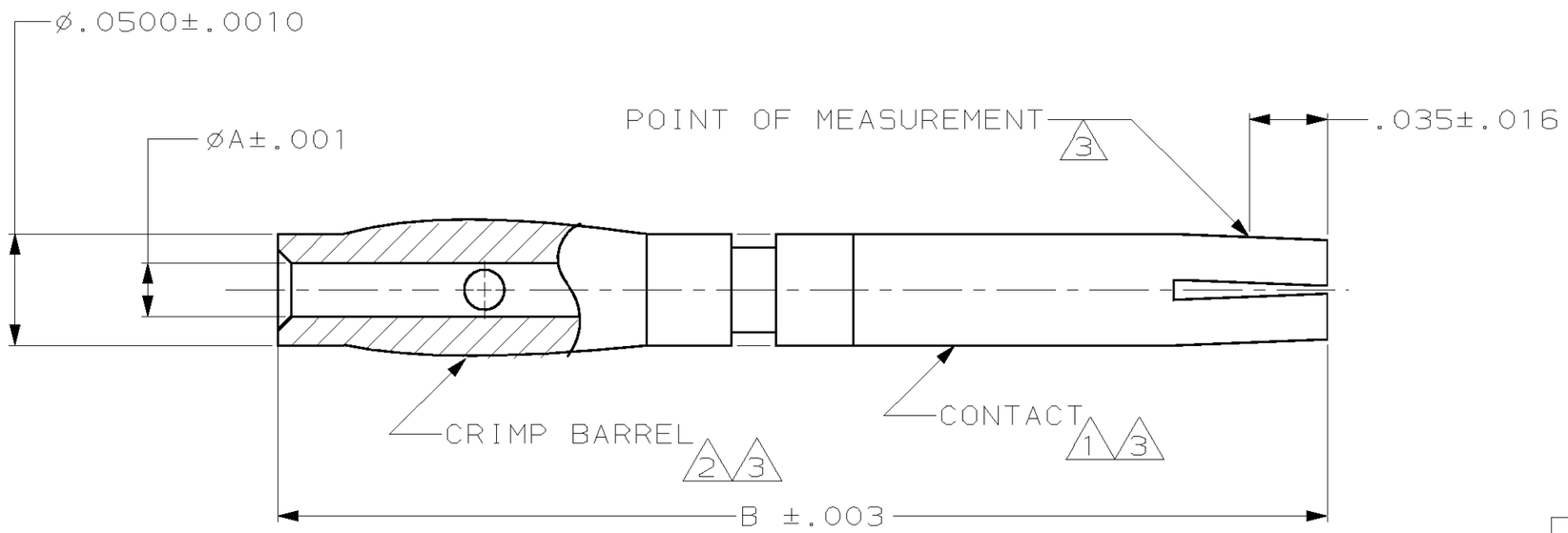

B	ø A	PART NUMBER
.476	.038	225546-4
.479	.042	225546-3
.463	.016	225546-2
.465	.024	225546-1

THIS DRAWING IS A CONTROLLED DOCUMENT.

DIMENSIONS: INCHES

TOLERANCES UNLESS OTHERWISE SPECIFIED:
0 PLC ±-
1 PLC ±-
2 PLC ±-
3 PLC ±-
4 PLC ±-
ANGLES ±-

MATERIAL – 1 2

FINISH – 3

DWN M. O'BRINE 20SEP00
CHK J. HAVENER 20SEP00
APVD J. HAVENER 20SEP00
PRODUCT SPEC –
APPLICATION SPEC –
WEIGHT –

CUSTOMER DRAWING

AMP Incorporated
Harrisburg, PA 17105-3608

NAME CONTACT ASSY, SMA

SIZE	CAGE CODE	DRAWING NO	RESTRICTED TO
A3	00779	C- 225546	–

SCALE 15:1 SHEET 1 OF 1 REV 0

AMP 1470-19 REV 11JUN97