MICRO SWITCH
FREEPORT ILLINOIS U.S.A.
A DIVISION OF HONEYWELL
FED. MFG. CODE 91929

SWITCH-ENCLOSED

CATALOG LISTING
602EN16-6B

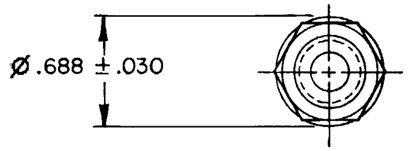

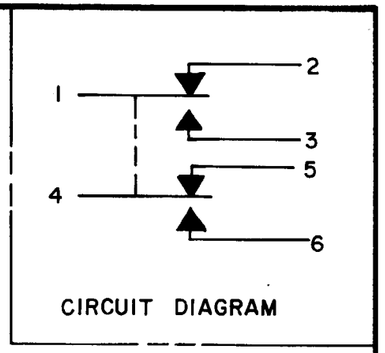

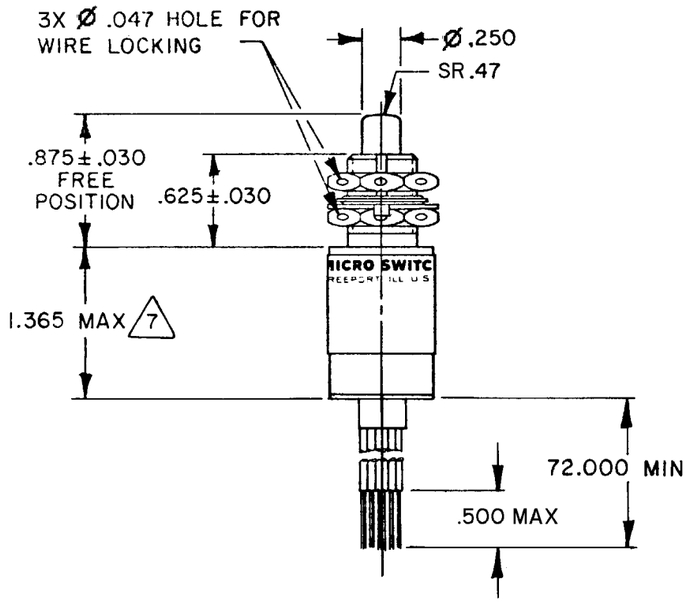

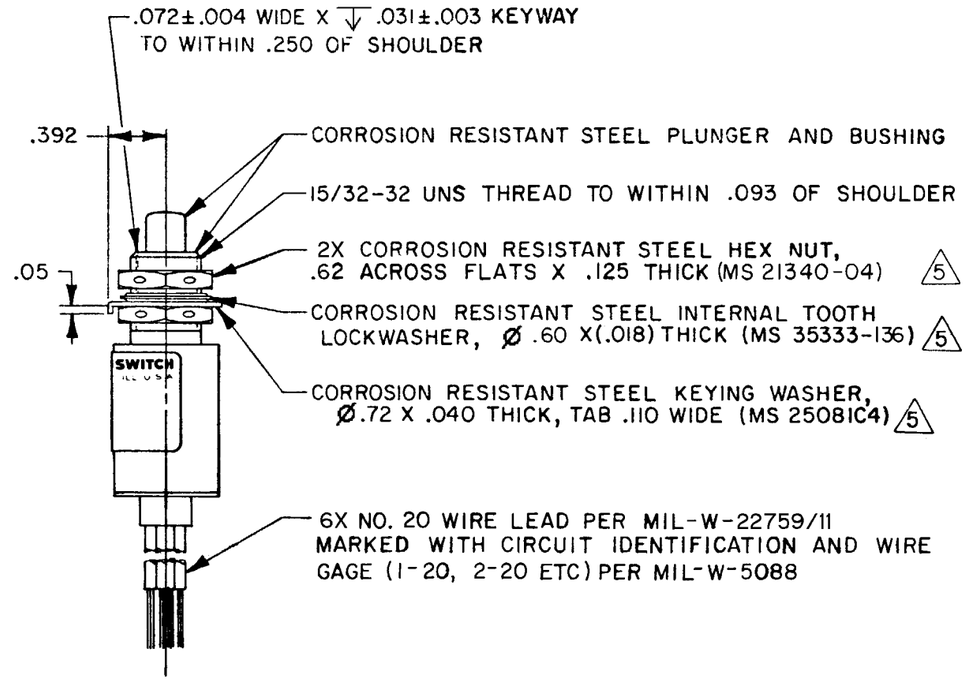

NOTES
1 - CORROSION RESISTANT STEEL ENCLOSURE
2 - SWITCH SEALED PER MIL-PRF-8805 SYMBOL 4
3 - CIRCUIT DIAGRAM, CAT. LIST., FED. MFG. CODE AND DATE CODE ARE SHOWN ON NAMEPLATE
4 - COINCIDENCE OF OPERATING AND RELEASING POINTS: .010 OF PLUNGER TRAVEL
5 - HARDWARE MAY BE PACKAGED UNASSEMBLED PER MIL-PRF-8805
6 BOTTOM OF SWITCH COATED WITH RESILIENT POTTING MATERIAL
7 THIS DIMENSION EXCLUDES THE RESILIENT POTTING MATERIAL ON THE BOTTOM OF THE SWITCH

THIS DRAWING COVERS A PROPRIETARY ITEM AND IS THE PROPERTY OF MICRO SWITCH, A DIVISION OF HONEYWELL. THIS DRAWING IS NOT TO BE COPIED OR USED WITHOUT THE APPROVAL OF MICRO SWITCH.

THIRD ANGLE PROJECTION

SCALE FULL
DO NOT SCALE PRINT

TOLERANCES
APPLY TO DESIGN UNITS. CONVERSIONS ARE ONLY FOR REFERENCE. UNLESS NOTED, TOLERANCES ARE ±

	DIM. mm	TOL. mm/in	DIM. in	TOL. mm/in
NO PLACES	X	1/.04		
ONE PLACE	X.X	0.4/.016	X.X	0.8/.03
TWO PLACES	X.XX	0.15/.006	X.XX	0.38/.015
THREE PLACES			X.XXX	0.13/.005
ANGLES				

DESIGN UNITS SI METRIC ☐ US CUSTOMARY ■

RAW MATERIAL-COMMERCIAL STANDARD
MICRO SWITCH STANDARDS APPLY

DIMENSIONS ARE TO BE MET BEFORE PROTECTIVE COATINGS ARE APPLIED

WEIGHT 6.2 OZ MAX

CHARACTERISTICS	
OPERATING FORCE	6-12 LB
FULL OVERTRAVEL FORCE	30 LB MAX
RELEASE FORCE	4 LB MIN
PRETRAVEL	.040 MAX
DIFFERENTIAL TRAVEL	.020 MAX
OVERTRAVEL	.125 MIN

ELECTRICAL DATA
CONTACT ARRANGEMENT
2X S P D T

LOAD	28 VDC	
	SEA LEVEL	50,000 FT.
RES	7	7
IND	4	2.5
MOTOR	4	
LAMP		

ANSI Y14.5M-1982 APPLIES

602EN16-6B
PAGE 1 OF 1
RELEASE NO. SR-11913
REPLACES X33968-EN
DRAWING NUMBER M 10 15
ISSUE 9 13 X 12 14
CHECK

REVISIONS
A C044351 WJM 5 MAR 80
B C047573 J A P 7 AUG 80
C C O 49280 JMJ 25 MAR 81
D C049806C KAG 28 SEP 81
E C O 60123 S. J. S. 24 SEP 86
F C062730 TSK 21 DEC 87
G C094274 DLM 17 MAR 99

CHECK 7 MAR 90 CHECK CHECK 4 MAR 80
DRAWN WJM

FORMTEK
FO-5285 1-A