THIS DRAWING IS UNPUBLISHED. RELEASED FOR PUBLICATION 20
© COPYRIGHT 20 BY - ALL RIGHTS RESERVED.

REVISIONS

| P | LTR | DESCRIPTION | DATE | DWN | APVD |
|---|---|---|---|---|---|
| | A | INITIAL | 23JUN2015 | DW | CW |
| | | | | | |
| | | | | | |
| | | | | | |

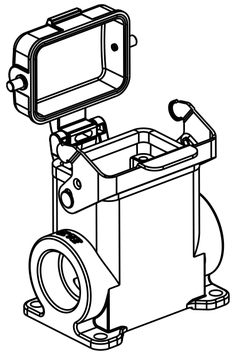

SCALE 1:2

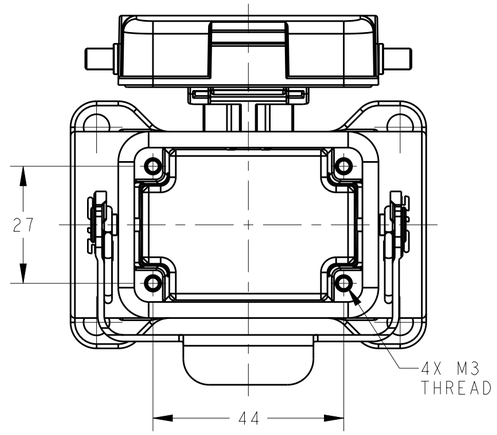


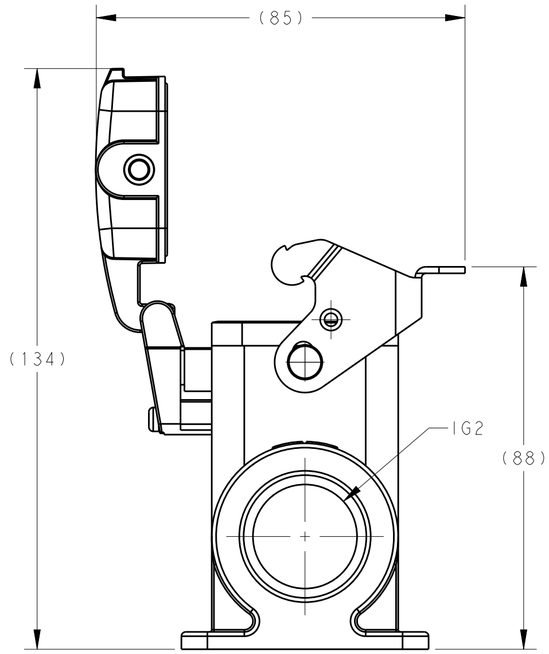


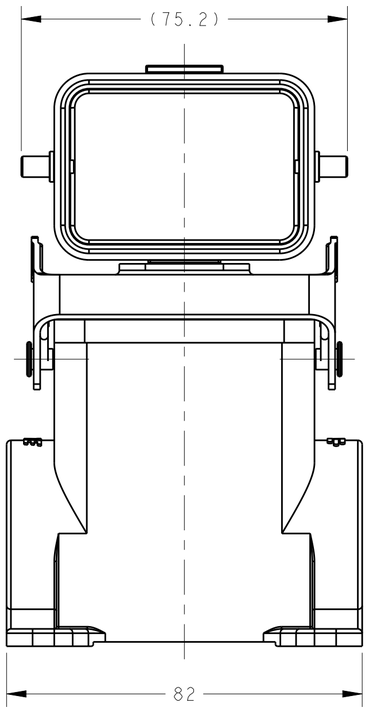


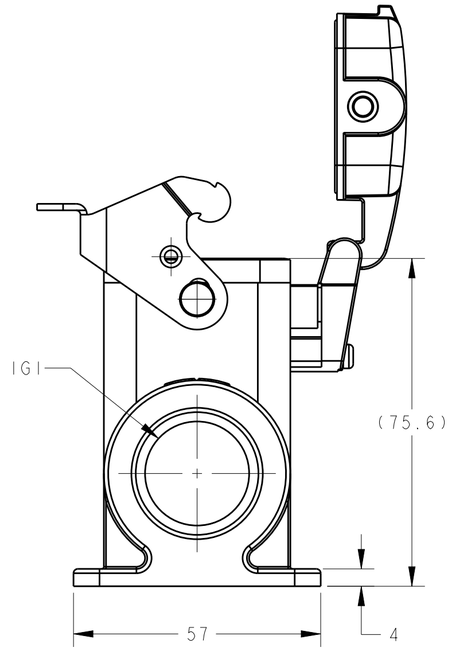


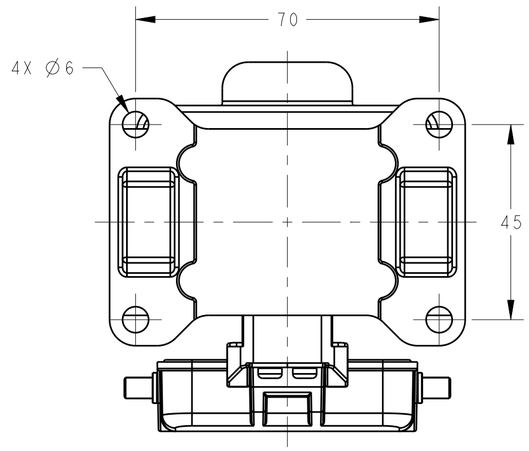


NOTES:
1. TECHNICAL CHARACTERISTICS:
   HOUSING MATERIAL: DIE CAST ALUMINIUM ALLOY
   SURFACE: POWDER COATED, GREY
   OPERATION TEMPERATURE: -40-+125°C
   DEGREE OF PROTECTION: IP65 (MATED)

注释：
1. 技术参数：
   表面安装下壳材料： 铝合金
   表面处理： 粉末涂层，灰色
   工作温度： -40-+125°C
   防护等级： IP65(配合)

| PART NUMBER | DESCRIPTION | IG1 | IG2 |
|---|---|---|---|
| T1660063321-000 | H6B-SDRHM-PG21 | PG21 | - |
| T1660063329-000 | H6B-SDRHM-PG29 | PG29 | - |
| T1660063332-000 | H6B-SDRHM-M32 | M32 | - |
| T1660060220-000 | H6B-SDRHM-2M20 | M20 | M20 |
| T1660063421-000 | H6B-SDRHM-2PG21 | PG21 | PG21 |
| T1660063429-000 | H6B-SDRHM-2PG29 | PG29 | PG29 |
| T1660063432-000 | H6B-SDRHM-2M32 | M32 | M32 |

THIS DRAWING IS A CONTROLLED DOCUMENT.

DIMENSIONS: mm

TOLERANCES UNLESS OTHERWISE SPECIFIED:
0 PLC ±-
1 PLC ±-
2 PLC ±-
3 PLC ±-
4 PLC ±-
ANGLES ±-

MATERIAL - -
FINISH - -

DWN 23JUN2015 David Wang
CHK 23JUN2015 Chris Wang
APVD 23JUN2015 Xiang Xu
PRODUCT SPEC 108-137013
APPLICATION SPEC 114-137013
WEIGHT -

TE Connectivity

NAME H6B-SDRHM-M/PG

| SIZE | CAGE CODE | DRAWING NO | RESTRICTED TO |
|---|---|---|---|
| A2 | 00779 | C-T166006XXXX000 | - |

Customer Drawing

SCALE 1:1 SHEET 1 OF 1 REV A

1471-9 (3/13)