NOTES:

1. MATERIALS AND FINISHES:
   BODIES, BARREL, HEX NUTS, LOCKWASHER - BRASS, WHITE BRONZE PLATING
   CONTACT - PHOSPHOR BRONZE & BRASS, GOLD PLATING
   INSULATORS - PTFE, NATURAL
   FERRULE - COPPER, WHITE BRONZE PLATING
   GASKET - SILICONE RUBBER, RED

2. ELECTRICAL:
   A. IMPEDANCE: 50 OHM
   B. FREQUENCY RANGE: DC - 6 GHz
   C. VSWR (RETURN LOSS): 1.2 MAX. @ 0-2.5 GHz
   1.4 MAX. @ 2.5-6 GHz
   D. DIELECTRIC WITHSTANDING VOLTAGE: 1500 VRMS

3. MECHANICAL:
   A. DURABILITY: 500 CYCLES MIN.
   B. TEMPERATURE RANGE: -65° C TO +165° C

4. CRIMPED FERRULE HEX. CRIMP SIZE .128"

5. CONTACT PIN CAN BE SOLDERED OR USE 4-WAY INDENT TOOL #47025

6. MAX. PANEL THICKNESS=6.5mm

7. SHOWS CABLE ENTRY DIMENSIONS.

THIRD ANGLE PROJ.

REVISIONS

REV	DESCRIPTION	DATE	ECO	APPR
NC	INITIAL RELEASE	29-Apr-04	-----	GRS
A	UPDATE DRAWING FORMAT, IMPROVE ELECTRICAL PERFORMACE, MODIFY CRIMP TOOL	31-Aug-12	2359	MZ
B	SYNC, REVISE BARREL O.D. & FERRULE	14-Dec-16	02621	SH

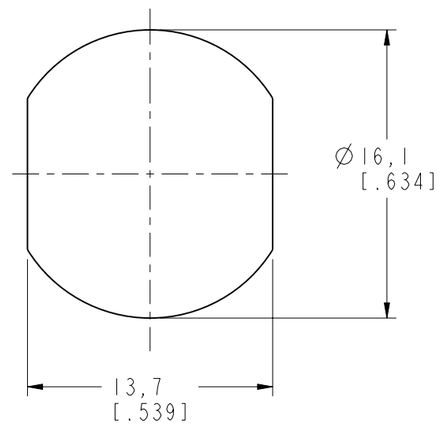

RECOMMENDED MOUNTING HOLE

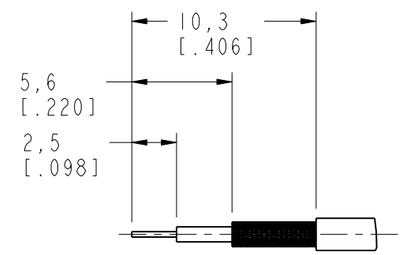

RECOMMENDED CABLE STRIPPING DIM'S

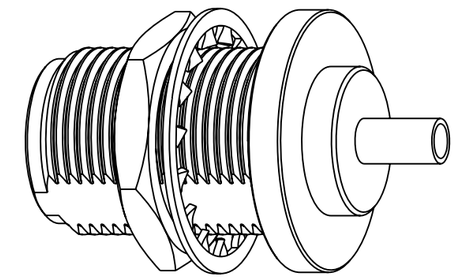

SCALE 2.000

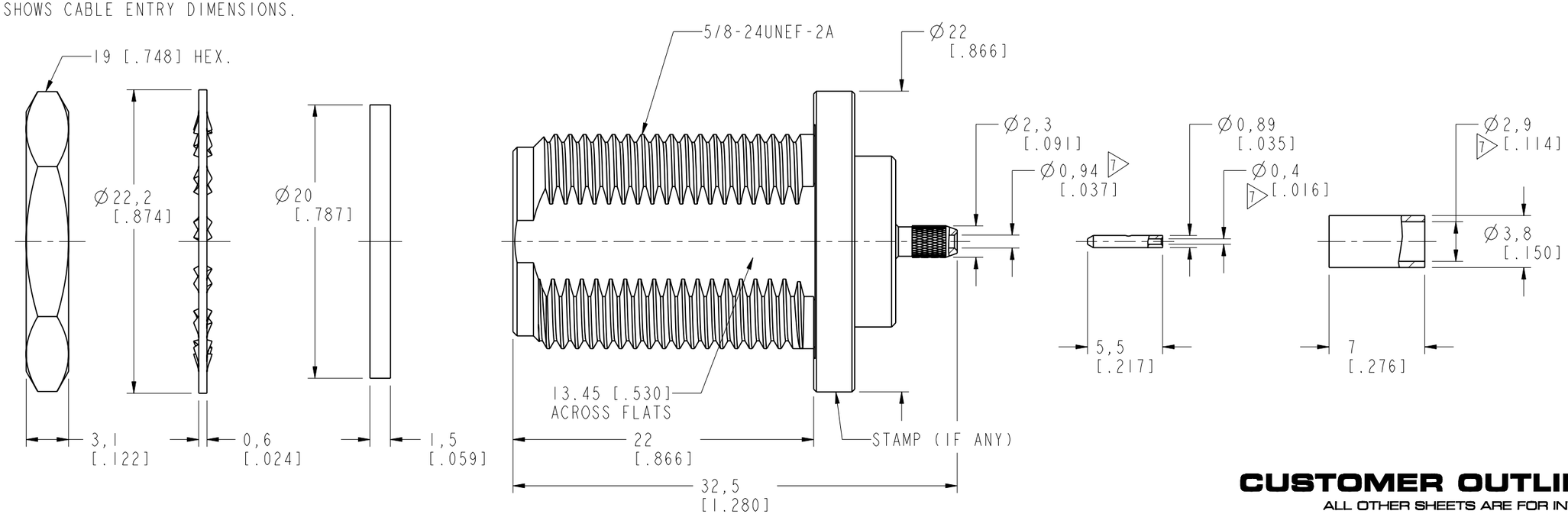

CUSTOMER OUTLINE DRAWING

ALL OTHER SHEETS ARE FOR INTERNAL USE ONLY

UNLESS OTHERWISE SPECIFIED, DIMENSIONS ARE IN METRIC AND TOLERANCES ARE:

<0.5mm	0.5 - 6mm	6 - 30mm	30 - 120mm	ANGLES
± 0.05mm	±0.1mm	±0.2mm	± 0.3mm	±1°

NOTICE - These drawings, specifications, or other data (1) are, and remain the property of Amphenol corp. (2) must be returned upon request; and (3) are confidential and not to be disclosed to any person other than those to whom they are given by Amphenol Corp. the furnishing of these drawings, specifications, or other data by Amphenol Corp., or to any other person to anyone for any purpose is not to be regarded by implication or otherwise in any manner licensing, granting rights to permitting such holder or any other person to manufacture, use or sell any product, process or design, patented or otherwise, that may in any way be related to or disclosed by said drawings, specifications, or other data.

MATERIAL
-

REFERENCE
AND
CONFIGURATION LEVEL: In Work

FINISH

DRAWN M.ZHANG	DATE 13-Dec-16		
ENGINEER S.LI	DATE 21-Sep-12		
APPROVED S.HSIEH	DATE 13-Dec-16		
CAD FILE			

TITLE
N BULKHEAD CRIMP JACK (FOR RG-178B/U,196A/U CABLE)

SCALE: 3.0:1.0 | SHEET 2 OF 2

DWG SIZE B | REV B

Amphenol RF
www.amphenolrf.com

DRAWING NO. N6421G1-AT5GP-196AU-50
ITEM NO. 036421AAB16CP5F
PART NO. 172313