THIS DRAWING IS UNPUBLISHED. RELEASED FOR PUBLICATION 20
© COPYRIGHT 20 BY - ALL RIGHTS RESERVED.

LOC	DIST

REVISIONS

P	LTR	DESCRIPTION	DATE	DWN	APVD
	A	FIRST VERSION	14JAN2015	GF	SM

NOTES :

1. MATERIALS AND FINISH:
   - HOUSING: PA66
   - CONTACTS: COPPER ALLOY, FINISH: TIN OVER NICKEL UNDERPLATE
2. MUST COMPLY WITH DIRECTIVE 2002/95/EC (ROHS)
3. WIRE TYPES AND SIZES ACCEPTED
   WIRE RANGE: 16AWG~20AWG.
   STRIP LENGTH: 7.5mm~8.5mm
4. PACKAGED IN TRAY.
5. CURRENT RATING: 6Amp AC300V.
6. OPERATION TEMPERATURE: −40°C TO +105°C

P/N: *−2834019−*

COLOR CODE:
1=GREEN
2=BLUE
3=BROWN
4=ORANGE
5=GREY
6=RED
7=YELLOW
8=PURPLE
9=WHITE
0=BLACK

SERIES CODE

PIN No:
2=2 POSN
3=3 POSN
4=4 POSN
5=5 POSN
6=6 POSN
7=7 POSN
8=8 POSN

REMARK: THE DIFFERENT COLORS COULD BE COMBINED TO THE NEW CONNECTOR P/Ns FOR CUSTOMER REQUEST.

PCB Layout

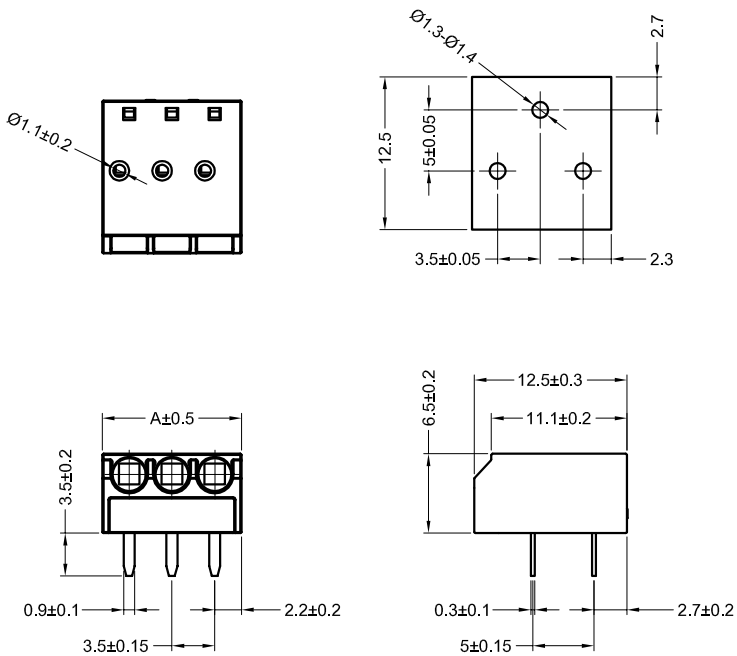

28.90	8 POSN
25.40	7 POSN
21.90	6 POSN
18.40	5 POSN
14.90	4 POSN
11.40	3 POSN
7.90	2 POSN
A	NO. OF POSITIONS

THIS DRAWING IS A CONTROLLED DOCUMENT.

DIMENSIONS: mm

TOLERANCES UNLESS OTHERWISE SPECIFIED
0 PLC ±0.20
1 PLC ±0.15
2 PLC ±0.1
3 PLC ±
4 PLC ±
ANGLES ±2°

MATERIAL 1
FINISH 1

DWN GEORGE FU 14JAN2015
CHK SHI MING 14JAN2015
APVD XU XIANG 14JAN2015
PRODUCT SPEC 108-137083
APPLICATION SPEC 114-137083
WEIGHT -

TE Connectivity

NAME 3.50mm Pitch Modular Screwless Conn.

SIZE A2 | CAGE CODE 00779 | DRAWING NO C-2834019 | RESTRICTED TO -

CUSTOMER DRAWING | SCALE 1:1 | SHEET 1 OF 1 | REV A

1471-9 (3/1D)