THIS DRAWING IS UNPUBLISHED. RELEASED FOR PUBLICATION -.- .
© COPYRIGHT - BY TYCO ELECTRONICS CORPORATION. ALL RIGHTS RESERVED.

LOC	DIST
AD	00

REVISIONS

P	LTR	DESCRIPTION	DATE	DWN	APVD
	O	RELEASE PER EC 0S12-0082-05	03JUN05	JDP	AMS

1. HOUSING MATERIAL: GLASS-FILLED POLYMER.
2. CONTACT MATERIAL: COPPER ALLOY.
3. CONTACT FINISH: DIN 41612 CLASS 2 ON CONTACT AREA. TIN PLATE ON POSTS.
4. RECOMMENDED HOLE SIZE FOR MANUAL APPLICATION OF CONNECTOR ONTO PC BOARD.
5. PART NUMBER, DATE CODE IDENTIFICATION, CSA LOGO THIS APPROXIMATE AREA.
6. CONTACT POINT.
7. MARKING ON THIS SIDE.

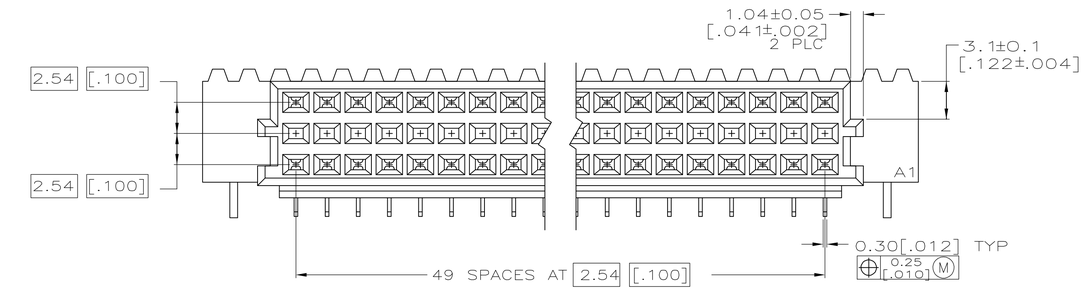

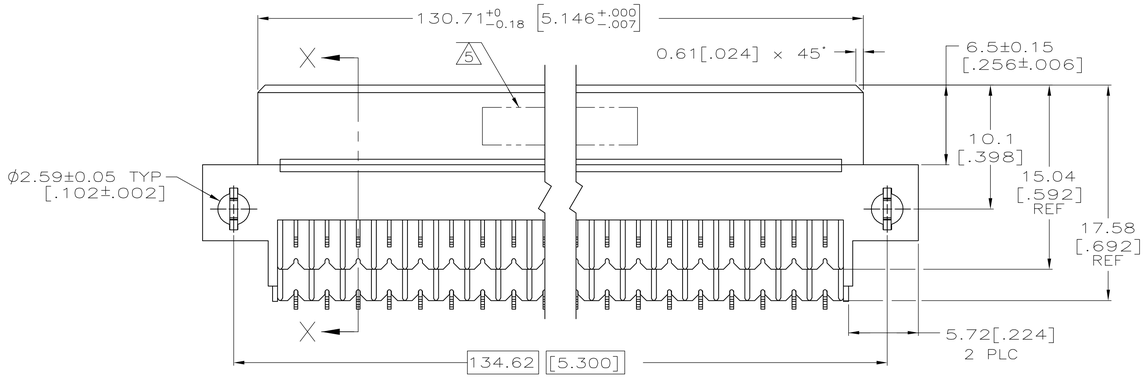

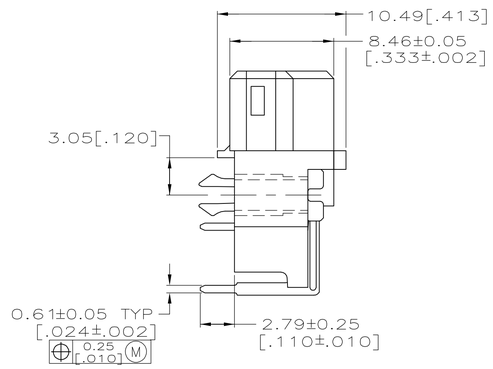

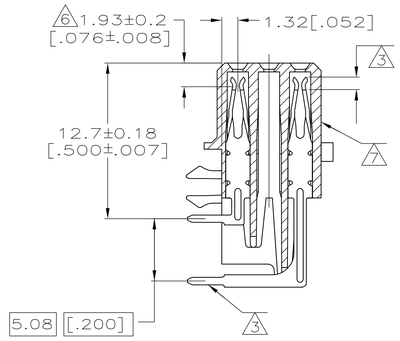

SECTION X-X

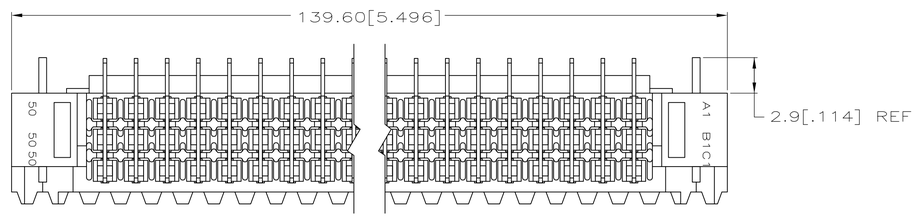

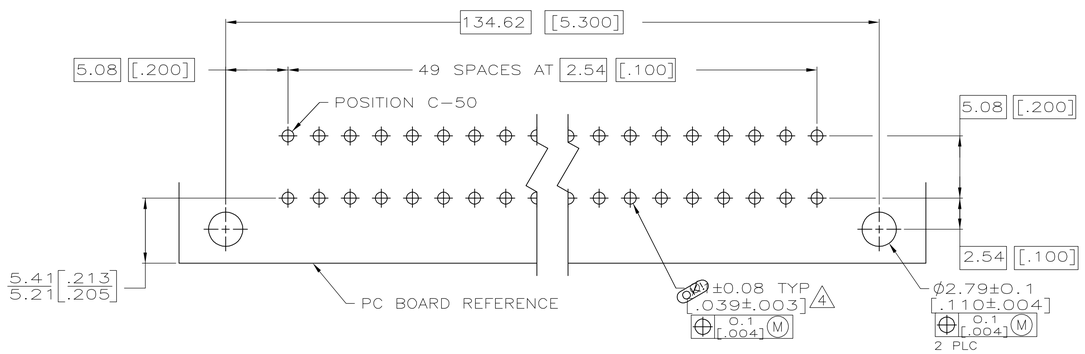

PC BOARD LAYOUT
RECOMMENDED PC BOARD THICKNESS 1.57[.062]

1 THRU 50	X	–	X	100	5536016-5
POSITIONS LOADED	C	B	A	NO. OF LOADED POSITION	ASSY PART NUMBER
	ROWS LOADED				

THIS DRAWING IS A CONTROLLED DOCUMENT.

DIMENSIONS: mm [INCHES]

TOLERANCES UNLESS OTHERWISE SPECIFIED:
0 PLC ± –
1 PLC ± –
2 PLC ± 0.13[.005]
3 PLC ± –
4 PLC ± –
ANGLES ± –

MATERIAL 1 2
FINISH 3

DWN J. POLIGNONE 03JUN05
CHK A. SHARPE 03JUN05
APVD A. SHARPE 03JUN05
PRODUCT SPEC —
APPLICATION SPEC —
WEIGHT —

Tyco Electronics Corporation
Harrisburg, PA 17105-3608

NAME ASSEMBLY, RECEPTACLE, EUROCARD, TYPE R, A&C 100/150 POSITION, 2.79[.110] SOLDER POSTS WITH BOARD-LOCKS

SIZE	CAGE CODE	DRAWING NO	RESTRICTED TO
A1	00779	C-5536016	—

CUSTOMER DRAWING | SCALE 4:1 | SHEET 1 OF 1 | REV O