REVISIONS			
REV	DESCRIPTION	DATE	APPROVED
01_0	RELEASED	N.C. 7/21/95	PCV 7/28/95

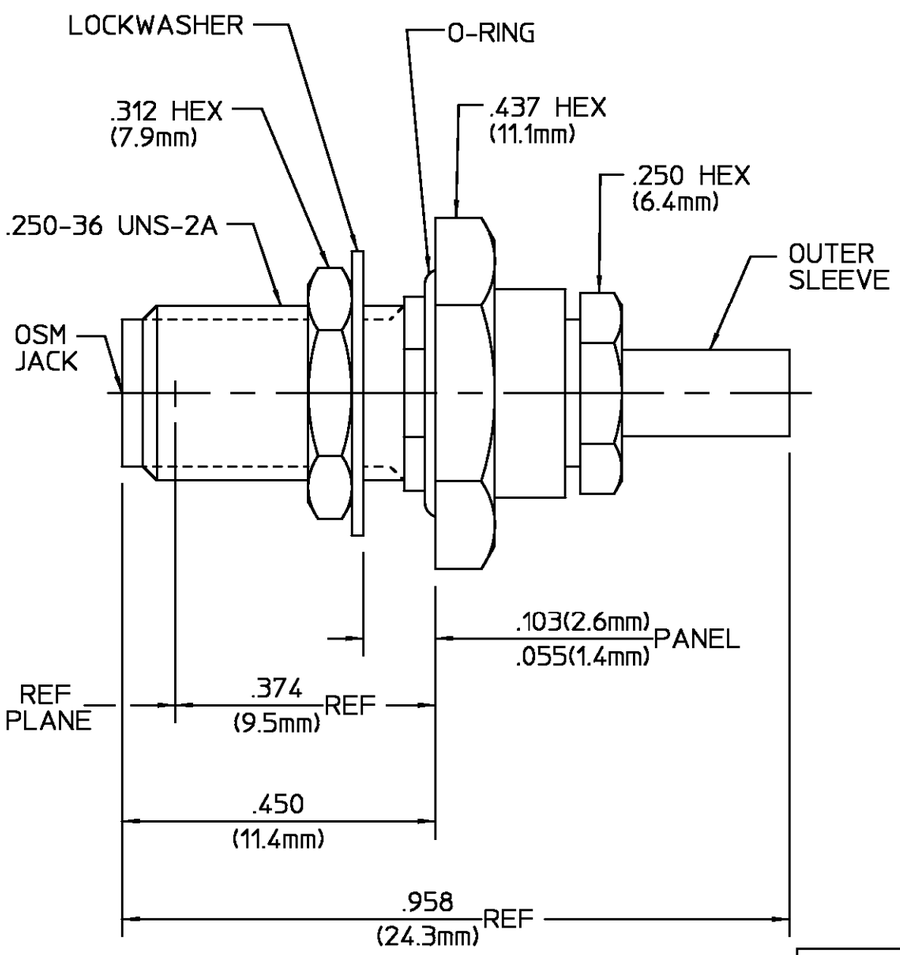

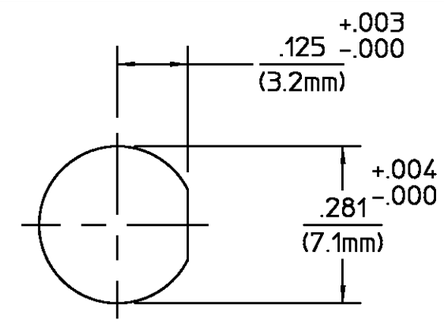

RECOMMENDED MOUNTING HOLE

COMPONENT	MATERIAL	FINISH
HOUSING CLAMP NUT MOUNTING NUT LOCKWASHER	STAINLESS STEEL PER ASTM-A484 AND ASTM-A582, TYPE 303	PASSIVATE PER ASTM A380
SLEEVE	STAINLESS STEEL PER ASTM-A484 AND ASTM-A582, TYPE 303	GOLD PLATE PER MIL-G-45204
DIELECTRIC	TFE FLUOROCARBON PER MIL-P-19468 AND FED SPEC L-P-403	N/A
DIELECTRIC	NYLON	N/A
CENTER CONTACT	BERYLLIUM COPPER PER QQ-C-530, ALLOY 173	GOLD PLATE PER MIL-G-45204
FERRULE	SOFT COPPER ALLOY	GOLD PLATE PER MIL-G-45204
O-RING	SILICONE RUBBER PER ZZ-R-765	N/A

NOTES:

1. DESIGNED FOR USE WITH RG-178/U CABLE
2. CAPTURED CENTER CONTACT

CABLE ENTRY DIAMETER MINIMUM	
FERRULE	.099
SLEEVE	.036
DIELECTRIC	.021
CONTACT	.021

UNLESS OTHERWISE SPECIFIED DIMENSIONS ARE IN INCHES
TOLERANCE ON
FRAC. ± 1/64 DEC. ±.005 ANGLES ± 1°

These drawings and specifications are the property of M/A COM Incorporated and shall not be reproduced or copied or used in whole or in part as the basis for the manufacture or sale of item(s) without written permission.

DRAWN BY N. CARTER DATE 07/21/95
CHECKED BY
APP'D BY PCV 7/28/95

USE ASS'Y PROCEDURE

NO. A.P. 408-04924 (20-538)

AMP Incorporated
140 Fourth Avenue
Waltham, MA 02451-7599

TITLE
SMA BULKHEAD FEEDTHRU CABLE JACK
CRIMP ATTACH. M39012/59-3025 CAT.C

SIZE	CODE IDENT NO.		REV
B	26805	2034-8025-92	01_0
SCALE 5:1			SHEET 1 OF 1

CUSTOMER DRAWING

AMP PART # 1051992-1
SHEET 1 OF 1 REV A