MICRO SWITCH
a Honeywell Division
FED. MFG. CODE 91929

SWITCH - ENCLOSED

CATALOG LISTING
1HE222-6

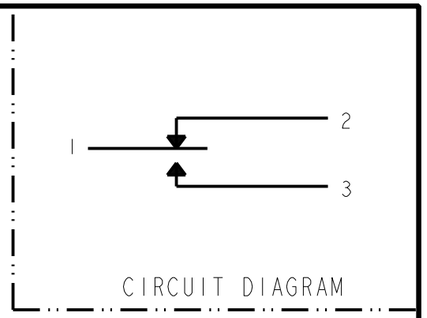

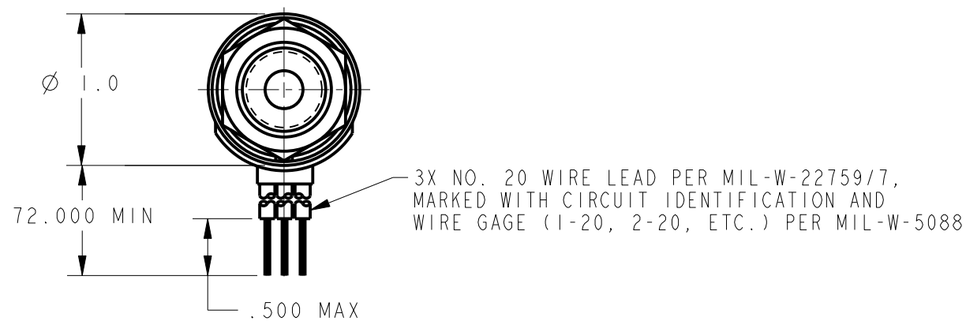

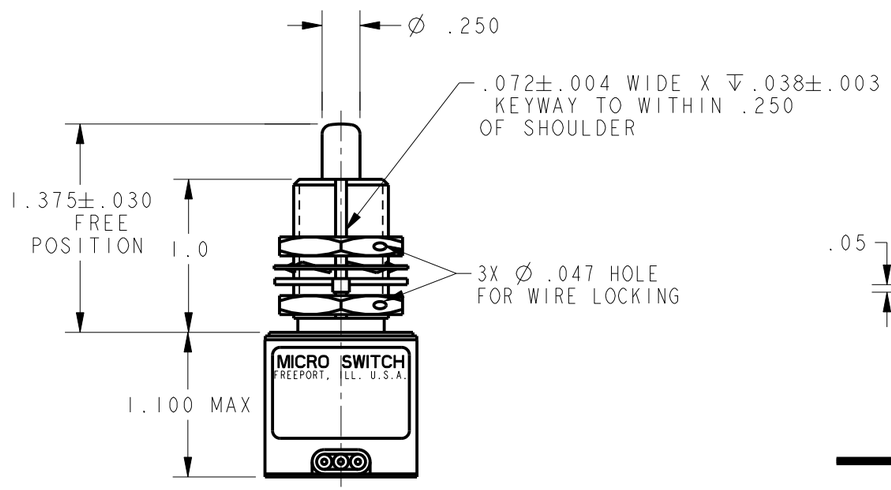

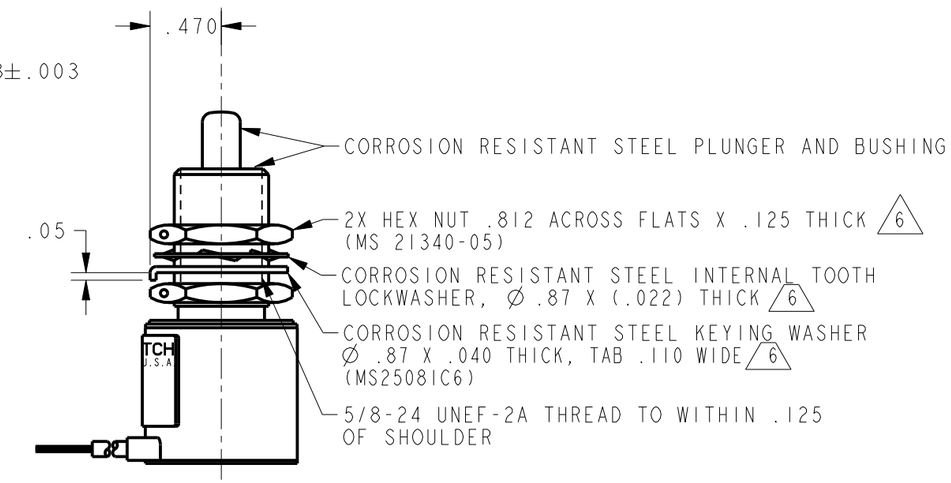

THIS DRAWING COVERS A PROPRIETARY ITEM AND IS THE PROPERTY OF MICRO SWITCH, A DIVISION OF HONEYWELL. THIS DRAWING IS NOT TO BE COPIED OR USED WITHOUT THE APPROVAL OF MICRO SWITCH

THIRD ANGLE PROJECTION

SCALE FULL

DO NOT SCALE PRINT

UNLESS OTHERWISE SPECIFIED TOLERANCES ARE

ONE PLACE	(.0)	±.030
TWO PLACE	(.00)	±.015
THREE PLACE	(.000)	±.005
ANGLES		±

WEIGHT 7.5 OZ MAX

CHARACTERISTICS	
OPERATING FORCE	6-12 LB
FULL OVERTRAVEL FORCE	30 LB MAX
RELEASE FORCE	4 LB MIN
PRETRAVEL	.040 MAX
DIFFERENTIAL TRAVEL	.020 MAX
OVERTRAVEL	.250 MIN

ELECTRICAL DATA

CONTACT ARRANGEMENT 7
1X S P D T

LOAD	28 VDC SEA LEVEL AND 100,000FT	
	(AMPS)	
RES	1.0	
IND	0.5	

NOTES
1 - ENCLOSURE FINISHED WITH BLUE EPOXY ENAMEL COLOR NO. 25184 PER FEDERAL STANDARD 595
2 - CIRCUIT DIAGRAM, CATALOG LISTING, DATE CODE AND FED. MDG. CODE SHOWN ON NAMEPLATE
3 - FOR OPERATION IN TEMPERATURES OF -65°F TO +257°F
4 - COINCIDENCE OF OPERATING AND RELEASING POINTS: .010 INCH OF PLUNGER TRAVEL
5 - SWITCH SEALED PER MIL-PRF-8805 SYMBOL 5
6 HARDWARE MAY BE PACKAGED UNASSEMBLED PER MIL-PRF-8805
7 BIFURCATED GOLD CONTACT BASIC SWITCHES

ANSI Y14.5M-1982 APPLIES

1HE222-6 | CATALOG LISTING | PAGE 1 OF 1 | RELEASE NO. | REPLACES

ISSUE 4

REVISIONS
A 202192 G J W 22 JAN 01
B 0035712 BS 28DEC07

DRAWN	CHECK	ASD	CHECK	S A V	CHECK
G J W 21 JAN 01	28DEC07		21 JAN 01		

PTC/CAD 2D