MICRO SWITCH
A DIVISION OF MINNEAPOLIS-HONEYWELL REGULATOR COMPANY
FREEPORT, ILLINOIS
FED. MFR. CODE 91929

SWITCH - ENCLOSED

CATALOG LISTING
OPD - AR62

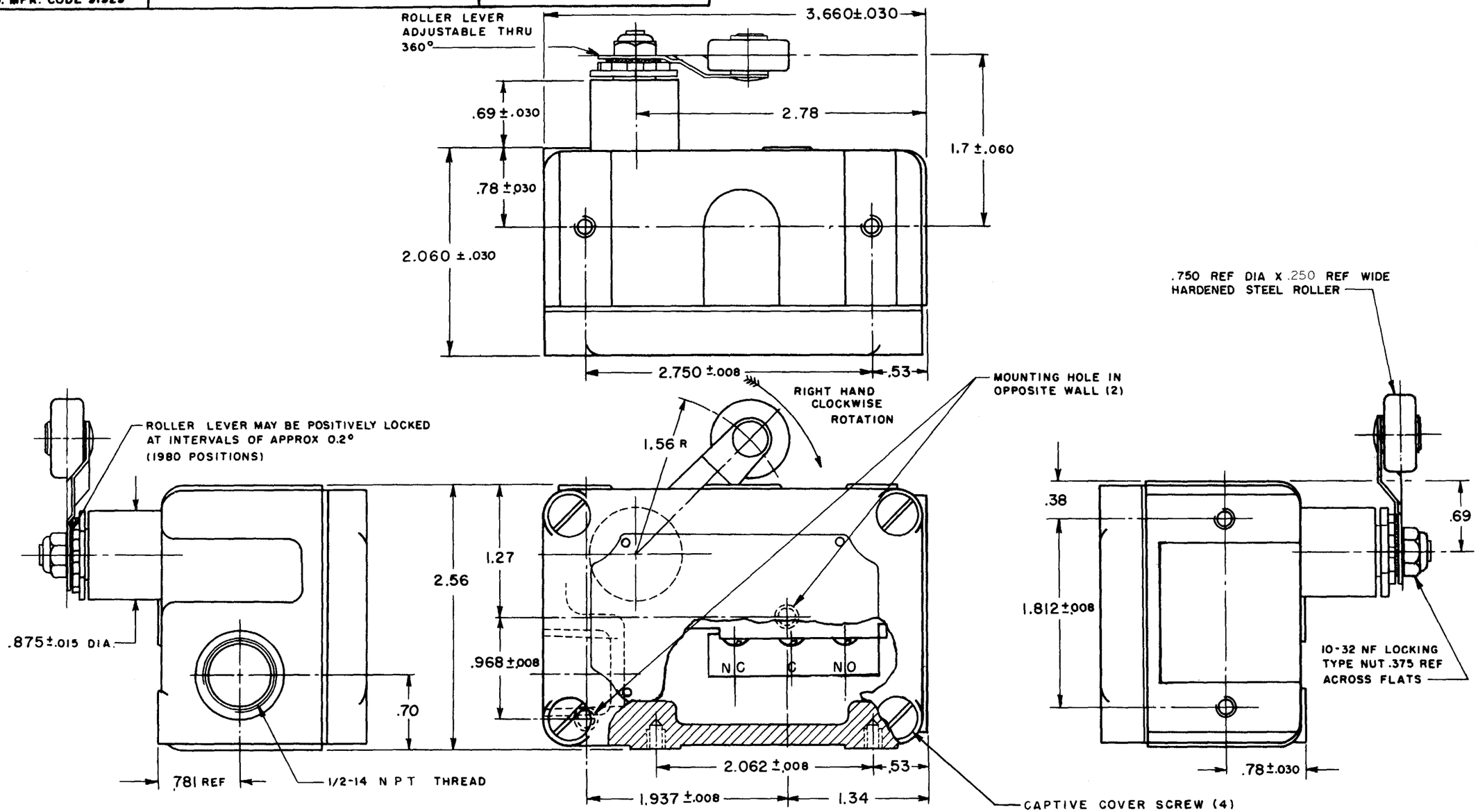

THIS DRAWING COVERS A PROPRIETARY ITEM AND IS THE PROPERTY OF MICRO SWITCH, A DIVISION OF MINNEAPOLIS-HONEYWELL REGULATOR CO. THIS DRAWING IS NOT TO BE COPIED OR USED WITHOUT THE APPROVAL OF MICRO SWITCH.

CHARACTERISTICS	ELECTRICAL DATA	SCALE FULL
OPERATING FORCE — — — — — 8 - 24 OZ	CONTACT ARRANGEMENT D P D T	DO NOT SCALE PRINT
RELEASE FORCE — — — — — 4 - 12 OZ PRETRAVEL — — — — — — — .250 MAX DIFFERENTIAL TRAVEL — — — — .109 MAX BASIC SWITCH REPLACEMENT — — DT - 2R4 - A7 DO NOT OVERTRAVEL MORE THAN 25°	-L59- 10 A-125 OR 250 VAC 0.3 A-125 VDC ; 0.15 A-250 VDC	UNLESS OTHERWISE SPECIFIED DIMENSIONS ARE IN INCHES **TOLERANCES ARE:** ONE PLACE (.0) ±.030 TWO PLACE (.00) ±.015 THREE PLACE (.000) ±.005 ANGLES ± WEIGHT

NOTE-
1 - MOUNTING SCREW HOLE, 10-32 NF-2B THREADS X .219 REF DEEP. (8)

2 - 4 - 40 NC X .125 REF ROUND HEAD TERMINAL SCREWS AND LOCKWASHERS
3 - SEALED CONSTRUCTION PROVIDES SPLASH RESISTANCE

OPD - AR62 | M | DRAWING NUMBER | RELEASE NO. | SR-9854 | REPLACES

ISSUE | CHECK

REVISIONS

A	CORR		
B	SR 9854	L S D 25 MAY 60	
C	C019878	R E R 26 SEP 61	
D	C026103	M B F 13 OCT 66	EAS 19 MAY 60
E	C055987	D L F 21 JUL 69	CHECK
F	C055031	J A S 5 NOV 84	
G	C066260A	G J W 26 MAR 85	19 MAY 60
H	C073344	J A S 14 AUG 89	
J	CO 81637	G J W 10 OCT 92	GCH
		GLH 3 APR 98	CHECK

DRAWN K L B 19 MAY 60

F0-50378.003