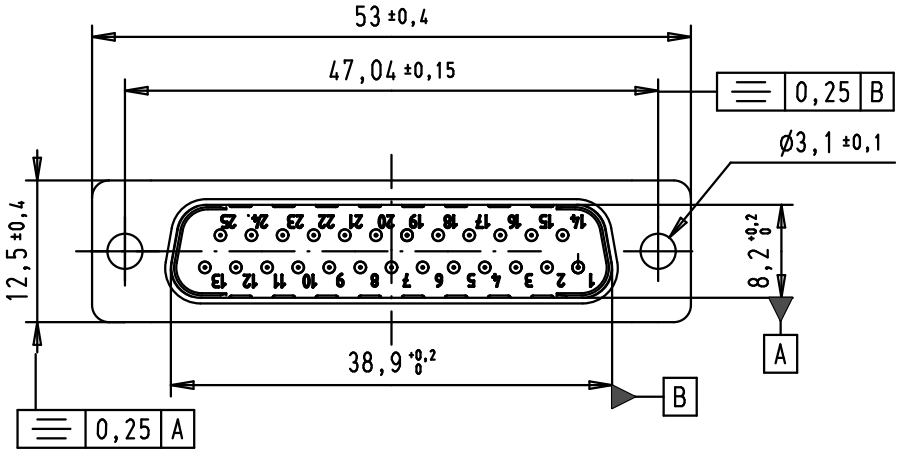

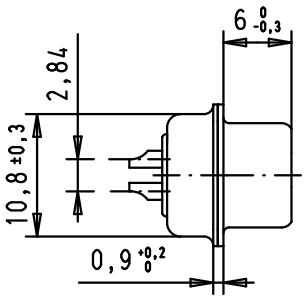

Solder bucket for AWG 20

SPECIFICATION

Performance level	PL2
Filter type	C
Capacitance	47pf±20%
Working Voltage	100v
Current Rating	7.5A
Insulation Resistance	>1GΩ

FREQUENCY (MHz)	ATTENUATION (dB)
5	-
10	-
50	-
100	-
500	30dB
1000	35dB

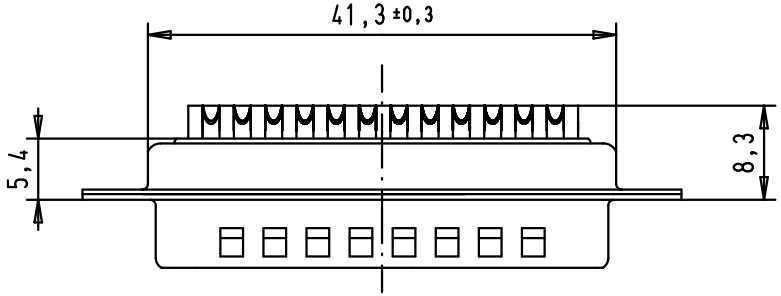

				Dat.	Name
			Detail.	8-JUL-02	CV
			Insp.	12/01/12	JB
36283	12/01/12	SD	Stand.		
31897	17/05/04	AF			
31058	8-JUL-02	CV			
Mod.	Dat.	Name			

All Dim. in mm
Orig. Size DIN A 4

HARTING EURL
F-95972 Paris

D-Sub, male, straight, 25 Poles, with turned solder bucket and hole

Ma?Mstab/ Scale: 1.5:1

TB 09643217210

Sub.

Blatt/ Page: 1/1