THIS DRAWING IS UNPUBLISHED. RELEASED FOR PUBLICATION 20
© COPYRIGHT 20 BY TYCO ELECTRONICS CORPORATION. ALL RIGHTS RESERVED.

SET UP GAGE 458637-3

LOC	DIST
A	66

REVISIONS

P	LTR	DESCRIPTION	DATE	DWN	APVD
	1	DEVELOPMENT	28APR2009	C.C	S.X
	A	RELEASED	23JUN2009	C.C	N.D

PART NUMBER	REV	TERMINATOR	FEED TYPE	DESCRIPTION
1238088-1	A	LEADMAKER	MECH POST FEED	CUTS CARRIER
1238088-2	A	BENCH	MECH PRE FEED	CUTS CARRIER
1238088-6	A	LEADMAKER	MECH POST FEED	CONTINUOUS CARRIER
7-1238088-1	A	LEADMAKER	MECH POST FEED	-1 AND SPARE PARTS
7-1238088-2	A	BENCH	MECH PRE FEED	-2 AND SPARE PARTS
7-1238088-6	A	LEADMAKER	MECH POST FEED	-6 AND SPARE PARTS
7-1238088-7	A	-	-	SPARE PARTS KIT

CRIMP DATA YAZAKI TERMINAL YAZAKI CRIMP SPECS

TERMINAL NAME: 1.5 SYSTEM SEALED CONNECTOR

CRIMP	SIZE	TYPE	RANGE
WIRE	2.05 [.081 IN]	F	0.75-1.25mm²
INSUL	3.45 [.136 IN]	O	2.90 MAX [.114 IN MAX] △5

WIRE STRIP LENGTH 5.00-5.50 [.197-.217 IN]

APPL INSTRUCTIONS 408-8322

TERMINAL APPL SPEC: YAZAKI CRIMPING STANDARD YPES 72-WT10-1637-1

FEED 11.43 [.450 IN]

TERMINALS APPLIED

TE TERM PN	MFR TERM PN	TE SEAL PN	MFR SEAL PN
286813-1	7116-4103-02	286814-1	7158-3031-90
286813-2	7116-4103-08	-	-
-	-	-	-
-	-	-	-

WIRE SIZE	CRIMP HEIGHT	PIN PN & LENGTH [IN]
1.25mm²	1.20 ±0.05 [.047 ±.002 IN]	3-354779-4 [.3160]
1.00mm²	1.20 ±0.05 [.047 ±.002 IN]	3-354779-4 [.3160]
0.85mm²	1.10 ±0.05 [.043 ±.002 IN]	4-354779-2 [.3200]
0.75mm²	1.10 ±0.05 [.043 ±.002 IN]	4-354779-2 [.3200]
-	-	
-	-	
-	-	
-	-	
-	-	
-	-	
-	-	
-	-	

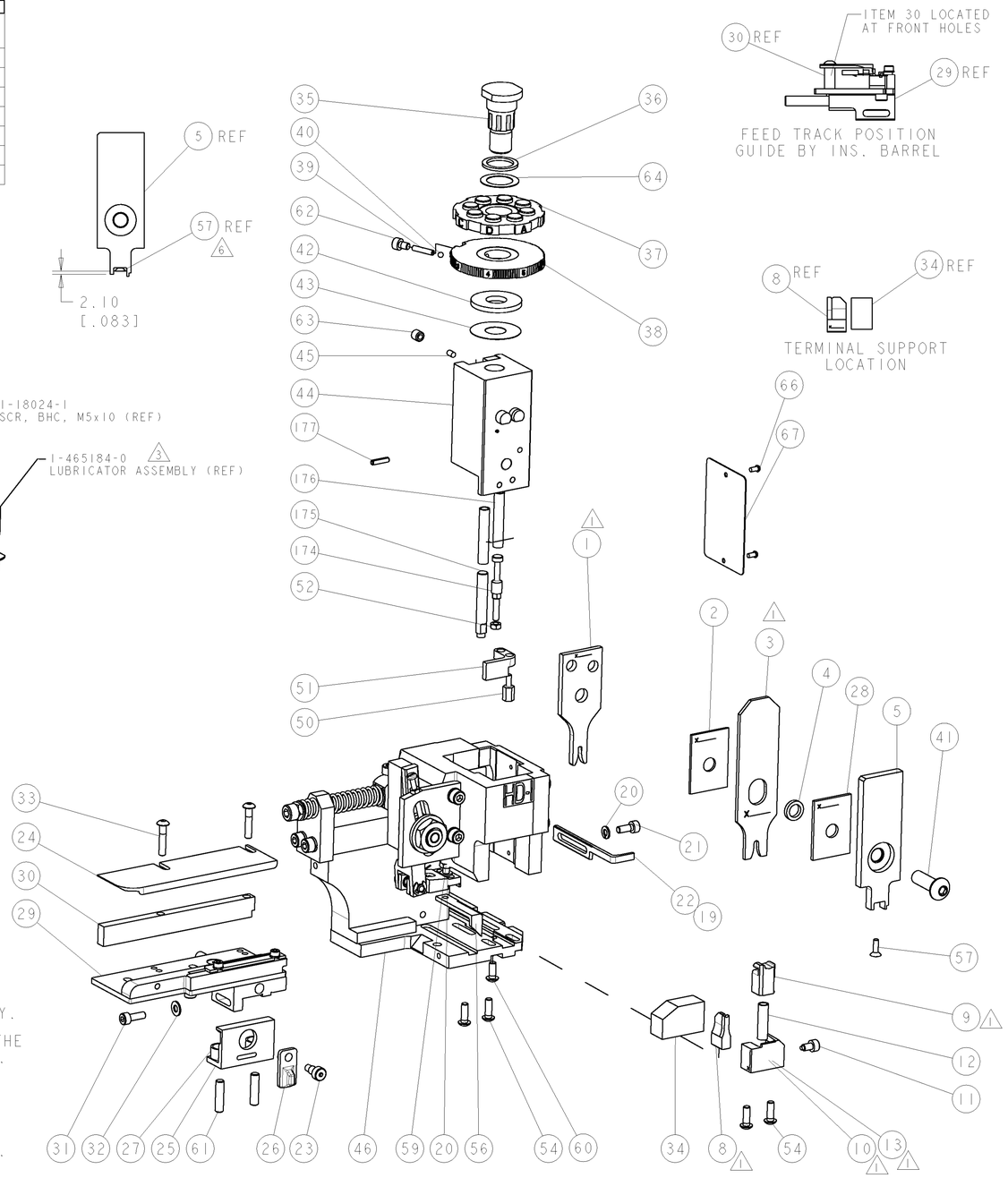

△1 RECOMMENDED SPARE PARTS.

2. GREASE RAM, CAM, CAM FOLLOWER AND FEED ROD LIGHTLY.

△3 CERTAIN TERMINALS REQUIRE LUBRICATION. REFER TO THE APPLICATOR INSTRUCTION SHEET FOR MORE INFORMATION.

4. LUBRICATE DAILY PER THE APPLICATOR INSTRUCTION SHEET SUPPLIED WITH THE APPLICATOR.

△5 THIS APPLICATOR APPLIES TERMINAL WITH A SEAL. INSULATION DIA QUOTED IS OUTSIDE DIAMETER OF SEAL. WIRE INSULATION DIA IS DEPENDENT ON SEAL BEING APPLIED.

△6 APPLY TORQ-SEAL IN ALLEN SOCKET TO FILL HOLE AFTER FLAT HD HAS BEEN ADJUSTED TO CORRECT HEIGHT AT QUALIFICATION. APPLY #1-23419-5 LOC-TITE TO THREADS.

VIEW B ROTATED 180°

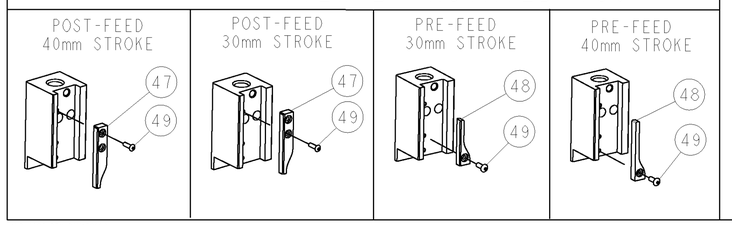

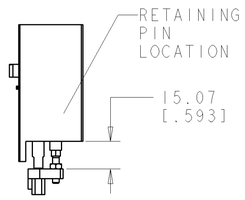

HOLDDOWN SET-UP

-	1	1	1	1	1	1	993111-8	PIN, SLOTTED SPRING 3.0 X 12.0	177
-	2	2	2	2	2	2	3-22280-7	SPRING, COMPRESSION	176
-	1	1	1	1	1	1	1752353-1	GUIDE PIN,HOLDDOWN	175
-	1	1	1	1	1	1	1901680-1	GUIDE PIN,HOLDDOWN	174
-	1	1	1	1	1	1	1338705-1	DOCUMENTATION PACKAGE	71
-	1	1	1	1	1	1	461264-1	PLATE, IDENTIFICATION	67
-	2	2	2	2	2	2	21017-2	SCREW, DRIVE	66
-	1	1	1	1	1	1	986950-1	WASHER, FLAT PRECISION	64
-	1	1	1	1	1	1	3-18031-0	SCR, SET, CUP POINT M6 X 6.0	63
-	1	1	1	1	1	1	18023-9	SCR, SKT HD CAP M4 X 6.0	62
-	2	2	2	2	2	2	2-18032-5	SCR, SET, FLT POINT M5 X 20.0	61
-	1	1	1	1	1	1	18024-7	SCR, BTN SKT HD CAP (M4 X 10.0)	60
-	1	1	1	1	1	1	5-18022-2	SCR, HEX HD CAP M4 X 8.0	59
-	1	1	1	1	1	1	985575-3	SCR, FLT SKT HD CAP M3 X 10.0	57
-	1	1	1	1	1	1	1338685-1	PAWL, FEED	56
-	4	4	4	4	4	4	18024-8	SCR, BTN SKT HD CAP (M4 X 12.0)	54
-	1	1	1	1	1	1	1-18030-0	NUT, HEX, REG M3.5	52
-	1	1	1	1	1	1	1901681-1	HOLDDOWN, TERMINAL	51
-	1	1	1	1	1	1	1-1752354-9	STANDOFF,HOLD-DOWN	50
-	1	1	1	1	1	1	18024-3	SCR, BTN SKT HD CAP (M3 X 10.0)	49
-	-	1	-	-	1	-	1338675-1	CAM, UNIVERSAL PRE FEED	48
-	1	-	1	1	-	1	1338676-1	CAM, UNIVERSAL POST-FEED	47
-	1	1	1	1	1	1	1320999-3	APPLICATOR SUBASSEMBLY, HDI	46
-	1	1	1	1	1	1	690191-1	PLUG,NYLON	45
-	1	1	1	1	1	1	1633724-4	RAM, (SIDE FEED)	44
-	1	1	1	1	1	1	690125-1	SHIM SUB-ASSY	43
-	1	1	1	1	1	1	690124-1	WASHER, RAM (.115)	42
-	1	1	1	1	1	1	2-18024-6	SCR, BTN SKT HD CAP (M8 X 25.0)	41
-	1	1	1	1	1	1	23241-1	BALL, STEEL	40
-	1	1	1	1	1	1	2-22278-7	SPRING, COMPRESSION	39
-	1	1	1	1	1	1	1-1320922-0	DISC, ADJUST, INSULATION CRIMP	38
-	1	1	1	1	1	1	354777-1	WIRE DISC, ASSEMBLY	37
-	1	1	1	1	1	1	22480-5	SPRING, COMPRESSION	36
-	1	1	1	1	1	1	690212-1	POST, RAM	35
-	1	1	1	1	1	1	2-1752356-0	SUPPORT, TERMINAL	34
-	2	2	2	2	2	2	1-18024-0	SCR, BTN SKT HD CAP (M4 X 20.0)	33
-	1	1	1	1	1	1	18027-2	WASHER, FLAT, REG M4	32
-	1	1	1	1	1	1	1-18023-2	SCR, SKT HD CAP M4 X 12.0	31
-	1	1	1	1	1	1	1320908-1	SPACER, STRIP GUIDE	30
-	1	1	1	1	1	1	1633073-5	STRIP GUIDE ASSEMBLY	29
-	1	1	1	1	1	1	1-455888-7	SPACER, CRIMPER	28
-	2	2	2	2	2	2	1-22284-0	SPRING, COMPRESSION	27
-	1	1	1	1	1	1	356835-1	LEVER, DRAG RELEASE	26
-	1	1	1	1	1	1	240792-1	DRAG, TERMINAL	25
-	1	1	1	1	1	1	1320928-1	PLATE, STRIP GUIDE	24
-	1	1	1	1	1	1	980371-4	SCR, SKT HD SHLDR 5.0 DIA X 6.0	23
-	1	-	1	1	-	1	690472-2	STRIPPER	22
-	1	1	1	1	1	1	1-18023-1	SCR, SKT HD CAP M4 X 10.0	21
-	2	2	2	2	2	2	18025-2	WASHER, SPRG LOCK, REG M4	20
-	-	1	-	-	1	-	690472-1	STRIPPER	19
△1 -	1	-	-	1	-	-	1338684-2	SHEAR HOLDER, FRONT	13
-	1	1	1	1	1	1	3-22280-3	SPRING, COMPRESSION	12
-	1	1	1	1	1	1	356885-5	STOP, SHEAR	11
△1 -	-	1	1	-	1	1	1-1320921-0	SHEAR HOLDER, FRONT, CUT	10
△1 -	1	1	1	1	1	1	318707-3	FLOATING SHEAR, FRONT	9
△1 1	2	2	2	1	1	1	8-1333204-2	ANVIL, COMBINATION	8
-	-	-	-	-	-	-	-	-	7
-	-	-	-	-	-	-	-	-	6
-	1	1	1	1	1	1	1338680-2	DEPRESSOR, SHEAR	5
-	1	1	1	1	1	1	1-238011-0	BLOCK, CRIMPER SPACER	4
△1 1	2	2	2	1	1	1	4-456135-2	CRIMPER, INSULATION O PREMIUM	3
-	1	1	1	1	1	1	1-455888-2	SPACER, CRIMPER	2
△1 1	2	2	2	1	1	1	2-456405-9	CRIMPER, WIRE PREMIUM	1
-77	-76	-72	-71	-6	-2	-1	PART NO	DESCRIPTION	ITEM NO

THIS DRAWING IS A CONTROLLED DOCUMENT FOR TYCO ELECTRONICS CORPORATION. IT IS SUBJECT TO CHANGE AND THE CONTROLLING ENGINEERING ORGANIZATION SHOULD BE CONTACTED FOR THE LATEST REVISION.

DWN	C CHEN	28APR2009
CHK	S XI	28APR2009
APVD	N DEMING	28APR2009

Tyco Electronics — Tyco Electronics, Harrisburg, PA 17105-3608

DIMENSIONS: mm [IN]

TOLERANCES UNLESS OTHERWISE SPECIFIED: 0 PLC ±- ; 1 PLC ±- ; 2 PLC ±- ; 3 PLC ±- ; 4 PLC ±- ; ANGLES ±-

PRODUCT SPEC: -

APPLICATION SPEC: See Table

WEIGHT: -

MATERIAL: - -

FINISH: - -

NAME: SIDE FEED HDI APPLICATOR

SIZE	CAGE CODE	DRAWING NO	RESTRICTED TO
A1	00779	C-1238088	-

CUSTOMER DRAWING — SCALE 3:5 — SHEET 1 OF 1 — REV A

AMP 4805 REV 31MAR2000