THIS DRAWING IS UNPUBLISHED. RELEASED FOR PUBLICATION 20
© COPYRIGHT 20 BY - ALL RIGHTS RESERVED.

REVISIONS					
P	LTR	DESCRIPTION	DATE	DWN	APVD
	F1	REVISED PER ECR-16-011494	21JUN2017	NK	CX

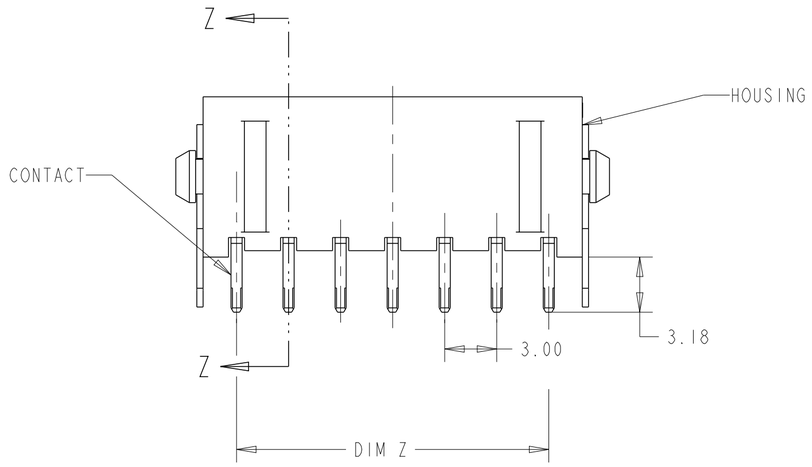

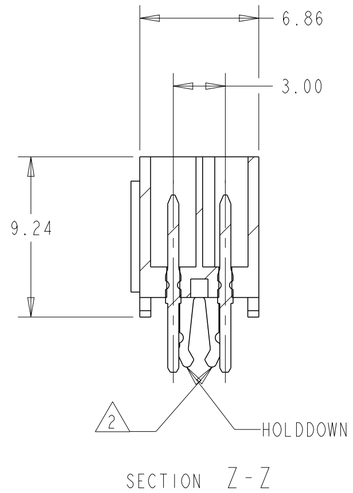

SECTION Z-Z

1. MATERIAL: HOUSING - HIGH TEMP. NYLON, UL 94V-0, BLACK.
   CONTACT - BRASS.
   HOLD DOWNS- PHOSPHOR BRONZE.
2. MAXIMUM INSERTION 30 LBS.
3. RECOMMENDED BOARD THICKNESS 1.57.
4. FINISH: CONTACT-2.54µm MINIMUM TIN-LEAD OVER 1.27µm MINIMUM NICKEL.
   HOLD DOWNS-2.54µm TIN-LEAD
5. FINISH: CONTACT - 2.54µm MINIMUM MATTE TIN OVER 1.27µm MINIMUM NICKEL.
   HOLD DOWNS- 2.54µm MATTE TIN

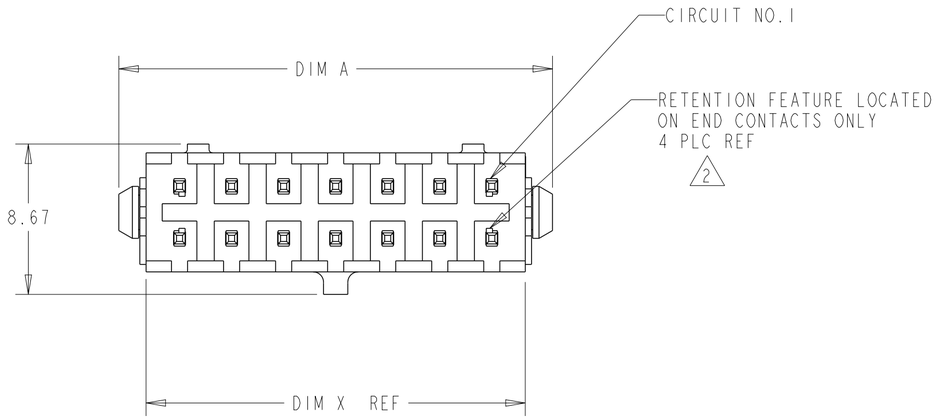

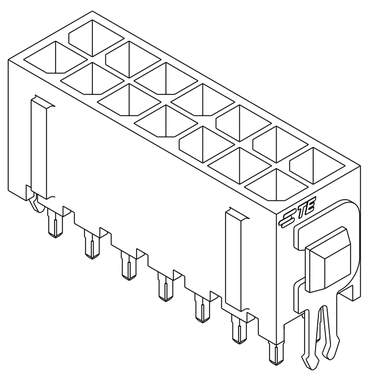

3 DIMENSIONAL MODEL

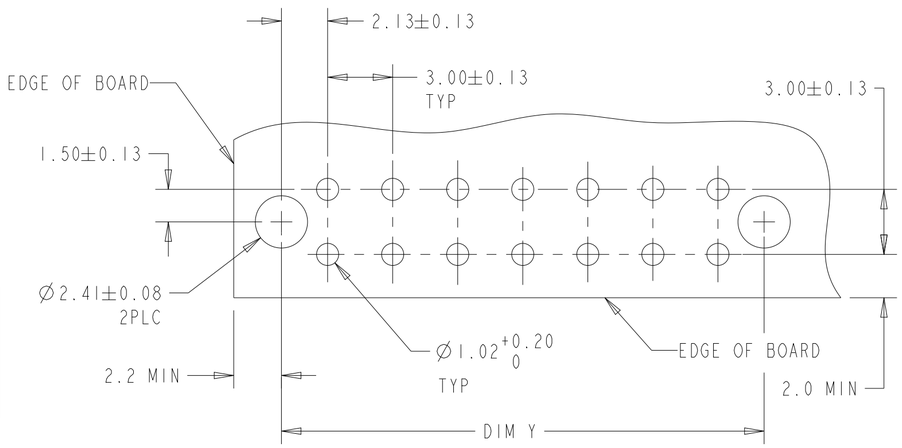

RECOMMENDED MOUNTING HOLE PATTERN 3
SCALE 5:1

	5	40.00	33.00	37.30	36.86	24	5-794680-4
		37.00	30.00	34.30	33.86	22	5-794680-2
		34.00	27.00	31.30	30.86	20	5-794680-0
		31.00	24.00	28.30	27.86	18	4-794680-8
		28.00	21.00	25.30	24.86	16	4-794680-6
		25.00	18.00	22.30	21.86	14	4-794680-4
		22.00	15.00	19.30	18.86	12	4-794680-2
		19.00	12.00	16.30	15.86	10	4-794680-0
		16.00	9.00	13.30	12.86	8	3-794680-8
		13.00	6.00	10.30	9.86	6	3-794680-6
		10.00	3.00	7.30	6.86	4	3-794680-4
		7.00	-	4.30	3.86	2	3-794680-2
SUPERSEDED BY 5-794680-4	4	40.00	33.00	37.30	36.86	24	~~2-794680-4~~
SUPERSEDED BY 5-794680-2		37.00	30.00	34.30	33.86	22	~~2-794680-2~~
SUPERSEDED BY 5-794680-0		34.00	27.00	31.30	30.86	20	~~2-794680-0~~
SUPERSEDED BY 4-794680-8		31.00	24.00	28.30	27.86	18	~~1-794680-8~~
SUPERSEDED BY 4-794680-6		28.00	21.00	25.30	24.86	16	~~1-794680-6~~
SUPERSEDED BY 4-794680-4		25.00	18.00	22.30	21.86	14	~~1-794680-4~~
SUPERSEDED BY 4-794680-2		22.00	15.00	19.30	18.86	12	~~1-794680-2~~
SUPERSEDED BY 4-794680-0		19.00	12.00	16.30	15.86	10	~~1-794680-0~~
SUPERSEDED BY 3-794680-8		16.00	9.00	13.30	12.86	8	~~794680-8~~
SUPERSEDED BY 3-794680-6		13.00	6.00	10.30	9.86	6	~~794680-6~~
SUPERSEDED BY 3-794680-4		10.00	3.00	7.30	6.86	4	~~794680-4~~
SUPERSEDED BY 3-794680-2		7.00	-	4.30	3.86	2	~~794680-2~~
	FINISH	DIM A	DIM Z	DIM Y	DIM X	NO. OF POSN.	ASSEMBLY

794680

THIS DRAWING IS A CONTROLLED DOCUMENT.

DIMENSIONS: mm[INCHES]

TOLERANCES UNLESS OTHERWISE SPECIFIED:
0 PLC ±-
1 PLC ±-
2 PLC ±0.20[.008]
3 PLC ±-
4 PLC ±-
ANGLES ±-
FINISH SEE TABLE

MATERIAL 1

DWN 23-MAR 2005 S. HOOVER
CHK 23-MAR-2005 C. JONES
APVD 23-MAR-2005 C. JONES
PRODUCT SPEC -
APPLICATION SPEC -
WEIGHT -

TE Connectivity

NAME VERTICAL HEADER ASSEMBLY, THRU HOLE, TIN, DUAL ROW, MICRO MATE-N-LOK(TM)

SIZE	CAGE CODE	DRAWING NO	RESTRICTED TO
A2	00779	C-794680	-

CUSTOMER DRAWING | SCALE 4:1 | SHEET 1 OF 1 | REV F1

1471-9 (3/13)