## SPECIFICATIONS

| PARAMETERS | VALUES | UNITS |
|---|---|---|
| RATED VOLTAGE | 12 | Vdc |
| OPERATING VOLTAGE RANGE | 3 ~ 28 | Vdc |
| RATED CURRENT (MAX) | 5 | mA |
| MINIMUM SPL @ 10 CM | 90 | dBA |
| RESONANT FREQUENCY | 4,500 ± 500 | Hz |
| TONE OR PULSE RATE | CONTINUOUS | 0 pulse /sec |
| OPERATING TEMPERATURE | -20 ~ +60 | °C |
| STORAGE TEMPERATURE | -30 ~ +70 | °C |
| HOUSING MATERIAL | ABS | - |
| TERMINAL MATERIAL | LEAD WIRE | - |
| WEIGHT | 5 | grams |

THIS DOCUMENT CONTAINS DATA PROPRIETARY TO PROJECTS UNLIMITED, INC. ANY USE OR REPRODUCTION, IN ANY FORM, WITHOUT PRIOR WRITTEN PERMISSION OF PROJECTS UNLIMITED, INC. IS PROHIBITED.
©2003, Projects Unlimited Inc.

REVISION HISTORY

| LTR | DESCRIPTION | DATE | APPROVED |
|---|---|---|---|
| - | RELEASED FROM ENGINEERING | 8/19/2004 | |
| A | REMOVED LEAD FREE ADDED RoHS NOTE | 8/10/2005 | |
| B | REVISED TO INVENTOR 3-D DRAWING TEMPLATE & HEIGHT/SOUND HOLE DIMENSIONS | 3/12/2008 | B.R. |

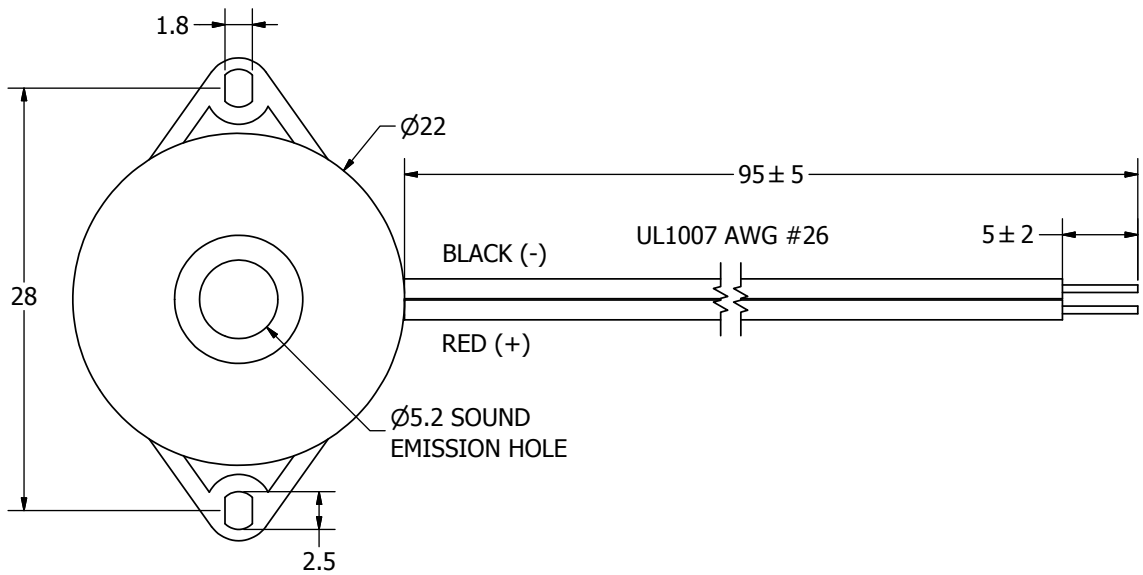


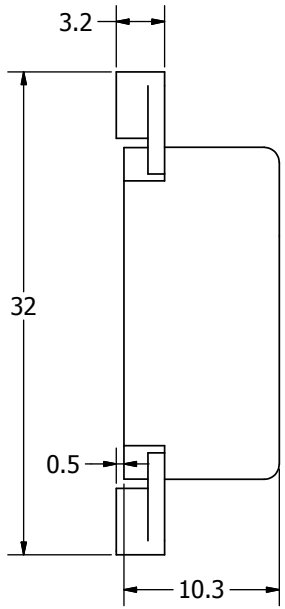

**NOTES:**

1. ALL DIMENSIONS ARE IN MILLIMETERS.
2. SPECIFICATIONS SUBJECT TO CHANGE OR WITHDRAWL WITHOUT NOTICE.
3. THIS PART IS RoHS 2002/95/EC COMPLIANT.

UNLESS OTHERWISE SPECIFIED:
DIMENSIONS ARE IN MILLIMETERS,
TOLERANCES ARE ±0.5 AND ANGLES ARE ±3°.

SIZE A3

AI-3245-TF-LW95-R.idw

| Designed by | Date | Checked by | Date | Approved by | Date | Drawn Date |
|---|---|---|---|---|---|---|
| R.A.C. | 8/19/2004 | | | R.W. | 8/19/2004 | 3/12/2008 |

pui audio inc
a projects unlimited company

# AI-3245-TF-LW95-R

Indicator

Edition: -

Sheet: 1 / 1