MICRO SWITCH
a Honeywell Division
FED. MFG. CODE 91929

ASSEMBLY TOGGLE SWITCH

CATALOG LISTING
13AT219 SERIES CHART 1

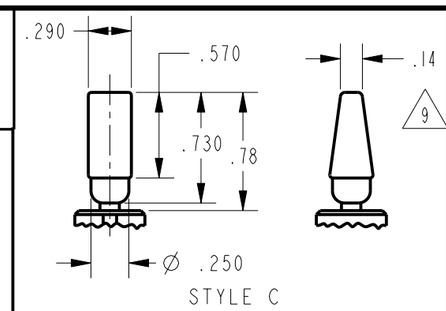

CATALOG LISTING	KEYWAY POSITION		CENTER POSITION		OPPOSITE KEYWAY POSITION	
	C-NO	C-NC	C-NO	C-NC	C-NO	C-NC
13AT219-5	1*	2*	NONE	1,2	2	1
*ASTERISK DENOTES MOMENTARY POSITION						
LEVER COLOR CODE 9						
COLOR IDENT	COLOR					
C01	WHITE					
C02	BLACK					
C03	BLUE					

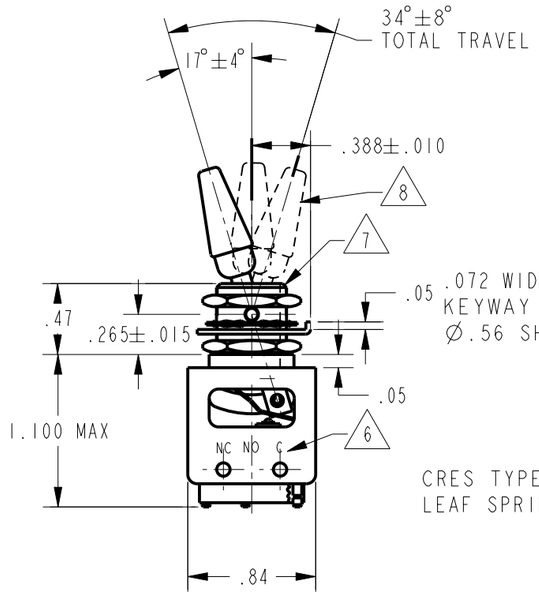

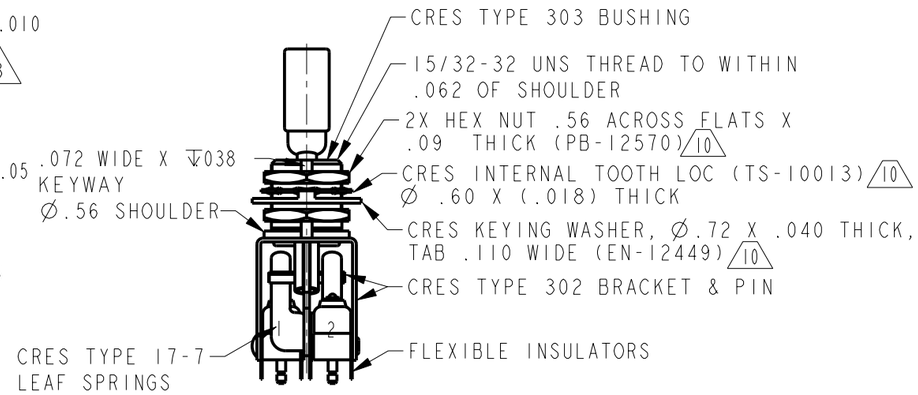

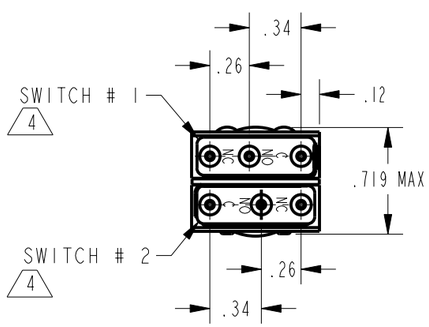

NOTES
1 - UNIT INCLUDES 2 EACH "411SM23-H58" TYPE (GOLD BASIC SWITCH CONTACTS WITH BOOT SEAL ON SWITCH PLUNGER)
2 - SWITCHES DO NOT NECESSARILY OPERATE SIMULTANEOUSLY
3 - PLATED TERMINALS WILL ACCEPT "AMP INC" Ø.058 PIN RECEPTACLES
4 SWITCH NUMBERS MARKED ON END OF BASIC SWITCHES
5 - WHEN LEVER IS MOVED OUT OF A MAINTAINED POSITION, IT WILL RETURN OF ITS OWN ACCORD TO THAT POSITION FROM AN ADJACENT MOMENTARY POSITION.
6 TERMINAL DESIGNATION MARKED ON BOTH SIDES OF UNIT
7 BUSHING SEALED TO PREVENT ENTRANCE OF LIQUID OR DUST
8 KEYWAY POSITION
9 SUFFIX MUST BE ADDED FOR DESIRED LEVER COLOR (EXAMPLE) 13AT219-5-C02
10 HARDWARE FURNISHED ASSEMBLED WITH SWITCH OR IN PACKET 15PA311-AT PER MIL-PRF-8805
11 - REPLACEMENT MOUNTING HARDWARE PACKET "15PA311-AT"

THIS DRAWING COVERS A PROPRIETARY ITEM AND IS THE PROPERTY OF MICRO SWITCH, A DIVISION OF HONEYWELL. THIS DRAWING IS NOT TO BE COPIED OR USED WITHOUT THE APPROVAL OF MICRO SWITCH

THIRD ANGLE PROJECTION

CHARACTERISTICS

ELECTRICAL DATA

CONTACT ARRANGEMENT
(2X S P D T)

30 VOLTS DC RATING
INDUCTIVE ---- SEA LEVEL ---- 1/2 AMP
50,000 FT ---- 1/2 AMP
RESISTIVE ---- SEA LEVEL ---- 1 AMP
50,000 FT ---- 1 AMP
MAXIMUM INRUSH ---------- 2 AMP

SCALE FULL
DO NOT SCALE PRINT

UNLESS OTHERWISE SPECIFIED TOLERANCES ARE

ONE PLACE	(.0)	±.030
TWO PLACE	(.00)	±.015
THREE PLACE	(.000)	±.005
ANGLES		±

WEIGHT .05 LB

ANSI Y14.5M-1982 APPLIES

CATALOG LISTING 13AT219 SERIES CHART 1
PAGE 1 OF 1
RELEASE NO. PR-22321
REPLACES -
ISSUE 8
CHECK
REVISIONS
A 203819 G J W AUG 01
B 204179 G J W OCT 01
C 204763 CSL 23JAN02
D 205032 GLH 6MAR02
CHECK
30AUG01
SAV
CHECK
30AUG01
DRAWN GJW
PTC/CAD 2D