BS,C ,201623,001	D

GEN. ST.	01	02	03	04	05	06	07	08	0D	50	60	70	80	90
INT. ST.	10 11	12 13	14 18	20 31	32 33	34 38	39 40	42 43	44 45	46 48	56 70	72 73 ~~75~~	76 81 ~~82~~	83 84 88

REV.	DATE	DESCRIPTION	BY	C'K'D'
A	2001-09-14	CONVERSION REVISION 05	KN	
B	2005-11-21	105-0245	ALEX B	BKP
C	2006-07-03	106-0095	VIVEK	BKP
D	2009-11-23	109-0267	GT	ALEX

RoHS-6 COMPLIANCE INDICATOR
(DIGIT 11 & 12)

HM2DK-----LF

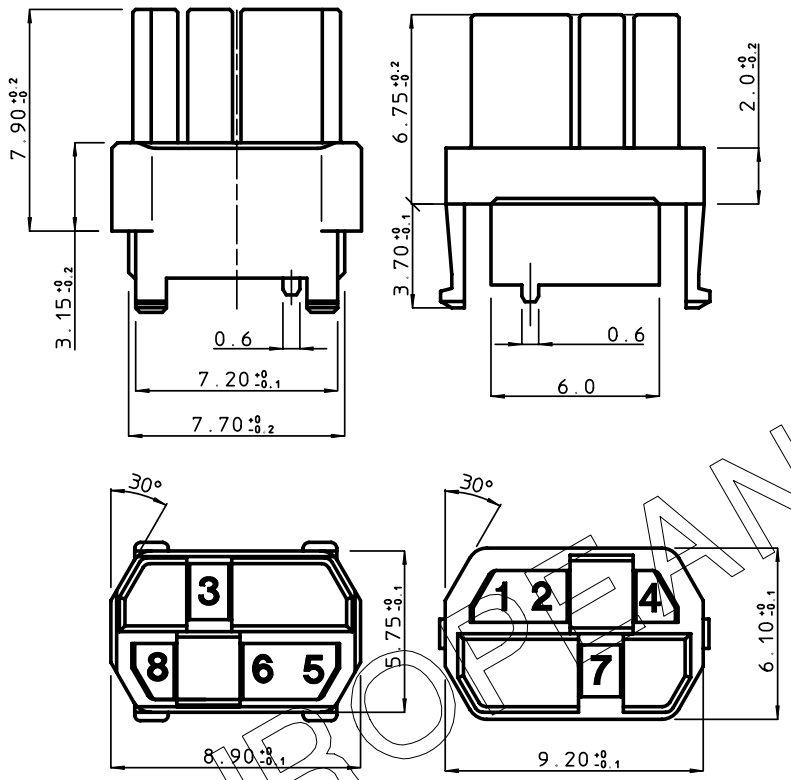

CATALOG NRS		COLOUR	RAL NR
HM2DK****PLF (FOR PLUG MODULES)	HM2DK****RLF (FOR RECEPTACLE MODULES)		
4678 #	1235 #	OCHER YELLOW	1024
3578	1246	RASPBERRY RED	3027
3568	1247	PASTEL ORANGE	2003
3478	1256	STEEL BLUE	5011
3467	1258	SLATE GREY	7015
3456	1278	CADMIUM YELLOW	1021
2578	1346	RESEDA GREEN	6011
2568	1347	OCEAN BLUE	5020
2567	1348	EMERALD GREEN	6001
2467	1358	YELLOW ORANGE	2000
2458	1367	HEATHER VIOLET	4003
2368	1457	COPPER BROWN	8004
2367	1458	STONE GREY	7030
2346	1578	PURPLE RED	3004
1678	2345	SALMON PINK	3022
1567	2348	BRILLIANT BLUE	5007
1457	2368	LIGHT IVORY	1015
1456	2378	PASTEL GREEN	6019
1356	2478	BLUE LILAC	4005
1347	2568	PIGEON BLUE	5014
1268	3457	OLIVE YELLOW	1020
1267	3458	CEMENT GREY	7033
1258	3467	LIGHT GREEN	6027
1248	3567	STRAWBERRY RED	3018
1247	3568	PURE ORANGE	2004
1238	4567	ULTRAMARINE BLUE	5002
1236	4578	NUTBROWN	8011
1235	4678	GREENBROWN	8000

COMBINATION SHOWN IN MAIN VIEW

NOTES:

1. THE PRODUCT (LF) MEETS EUROPEAN UNION DIRECTIVES AND OTHER COUNTRY REGULATIONS AS DESCRIBED IN GS-22-008

THIS IS OUR EXCLUSIVE PROPERTY. IT IS NOT TO BE COPIED, REPRINTED OR DISCLOSED TO A THIRD PARTY, NOR USED FOR MANUFACTURING WITHOUT OUR WRITTEN CONSENT, AND HAS TO BE RETURNED TO US IN CASE OF NO USAGE

DIT IS ONZE EIGENDOM EN MAG NOCH NAGEMAAKT, HERDRUKT, OVERGEMAAKT AAN DERDEN, NOCH VOOR FABRIKATIE GEBRUIKT WORDEN, ZONDER ONZE SCHRIFTELIJKE TOELATING. BIJ NIET GEBRUIK IS TERUGZENDING VERPLICHT.

1DEC ±0,2 2DEC ±0,1 ANGLES ±1°	APPR.	DATE	SIGN.	HM2 DISCRIMINATION KEYS
	DRAFT	1993-05-05	W.P.	CAT. No. HM2DK-----LF
	CHECKED			
WE RESERVE THE RIGHT TO CHANGE DIMENSIONS OR REQUIREMENTS WITHOUT PRIOR NOTICE.	PROD. MGR.			FCI www.fciconnect.com — SCALE 7/1
	PR.ENG.MGR.			
ALL DIMENSIONS IN MM	PR.MGT.MGR.			
	REFERENCES			BS,C ,201623,001 — D
				DRAWING No. — CUSTOMER DRAWING — REVISION

PDM: Rev:D STATUS: Released Printed: NOV 28, 2009

EUROPEAN PROJECTION