SIGN	DATE	DESCRIPTION	APPROVER
1	10/30'09	THe dimension changed from 19.1 to 19.1±0.50	Kind
2	10/30'09	Add tolerance table for Dim.L and Dim.P	Kind
3	10/30'09	Terminal lever material changed to thermoplastic (UL94-HB)	Kind
4	04/23'13	Update the drawing	Da cheng

THIS IS CAD DRAWING, DO NOT REVISE MANUALLY!!!

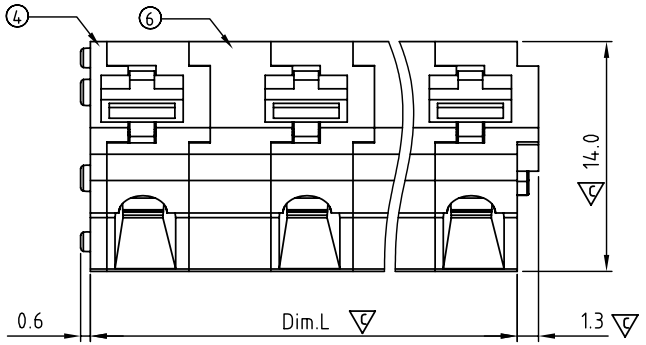

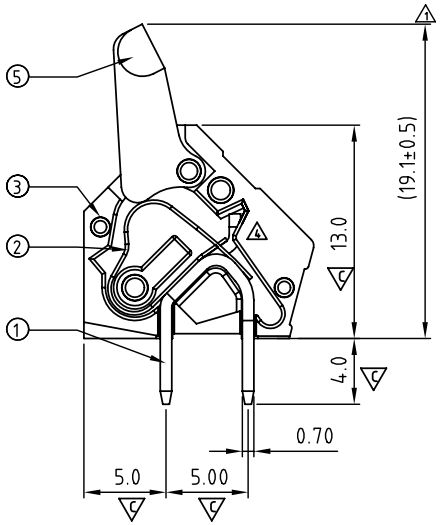

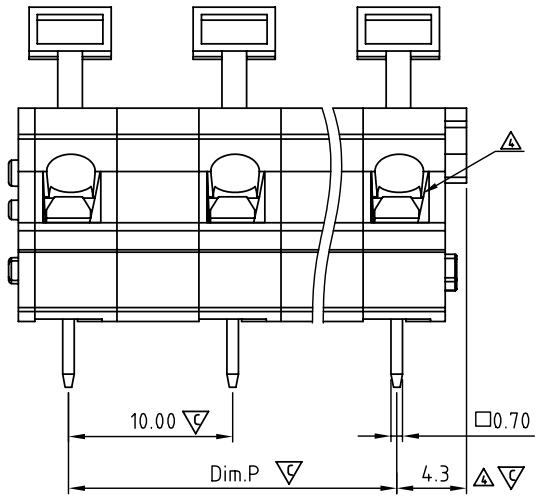

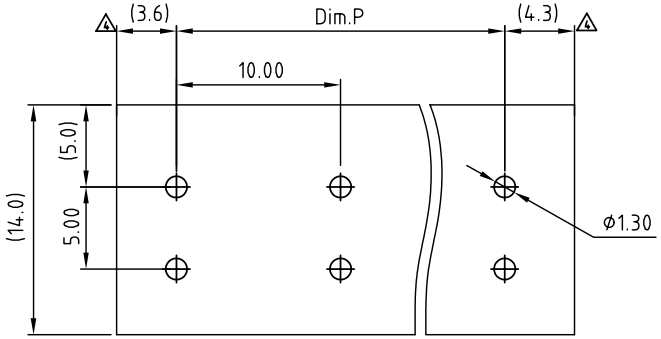

4 PCB. LAYOUT
Top view

Material

- Item 1 Solder pin : Brass , Tin plated
- Item 2 Wire guard : Stainless steel
- Item 3 Terminal housing: Thermoplastic (UL94V-0)
- Item 4 Terminal cover: Thermoplastic (UL94V-0)
- 3 Item 5 Terminal lever: Thermoplastic (UL94V-HB)
- Item 6 Terminal pad: Thermoplastic (UL94V-0)

Electrical

cULus

- Voltage rating: 300V
- Current rating: 15A
- Wire range:
- Solid wire(AWG): 12-28
- Stranded wire(AWG): 12-28
- Wire strip length: 6-7mm
- Withstanding Voltage: 1.6KV
- Operating temperature: -40°C to +115°C
- 4 Soldering temperature: 260°C±5°C/5 Sec
- Safety Approval: c UL us
- 4 Critical dimension: 4

HT xx 10 x 0 xxxx G

4 G: RoHs compliant (lead<4%) In copper Alloy

02 2 CONTACTS
03 3 CONTACTS
... ...
12 12 CONTACTS

4 Color
0 Black (RAL9005)
2 Red (RAL3001/D)
3 Orange(RAL2011/P)
4 Yellow(RAL1018/A)
5 Green(RAL6018/T)
6 Blue (RAL5015/A)
8 Grey(RAL7004/P)
9 White(RAL1102)
C Multiple colors

000 0 Standard @ Logo
000 A Standard ANY Logo
009 1 Standard ANY Logo
Any special item by customer request, please contact sales department.

2 N=Number of Poles

Dim.P=(N-1)×10.0

Dim.L=(N-1)×10.0+6.0

Dim. \ Poles	2P-6P	7P-12P
Dim.L	±0.25	±0.40
Dim.P	±0.25	±0.35

ANYTEK

CUSTOMER COPY

ALL RIGHTS RESERVED. REPRODUCTION OR ISSUE TO THIRD PARTIES IN ANY FORM WHATEVER IS NOT PERMITTED WITHOUT WRITTEN AUTHORITY FROM THE PROPRIETOR. PROPERTY OF ANYTEK TECHNOLOGY CO., LTD

TITLE	HT-10.0 Series				
PART NO.	HTxx10x0xxxxG			DWG NO.	8HT0401
APPROVED	CHECKED	DESIGNED	DRAWN	CUST NO.	
		Da cheng 2013.04.23	Da cheng 2013.04.23	UNIT: mm	SCALE: NONE
				SHEET: 01/01	REV.: D

Tolerance	
X.	±0.50
X.X	±0.30
X.XX	±0.10
X°	±1°