THIS DRAWING IS UNPUBLISHED. RELEASED FOR PUBLICATION 20
© COPYRIGHT 20 BY - ALL RIGHTS RESERVED.

REVISIONS

P	LTR	DESCRIPTION	DATE	DWN	APVD
	A	INITIAL RELEASE	23JUN2015	DL	CW
	A1	ECR-17-001721	14FEB2017	YC	CW

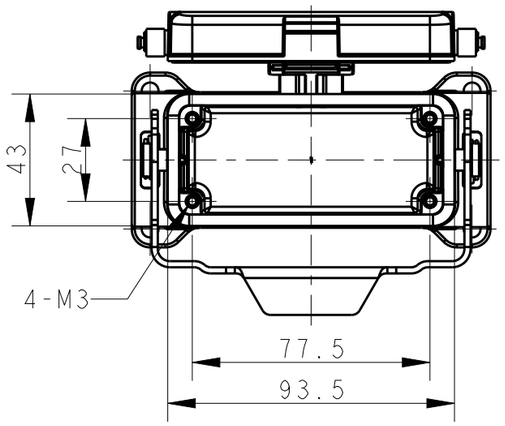

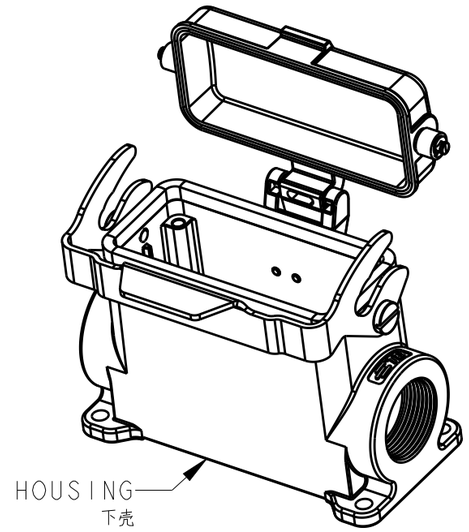

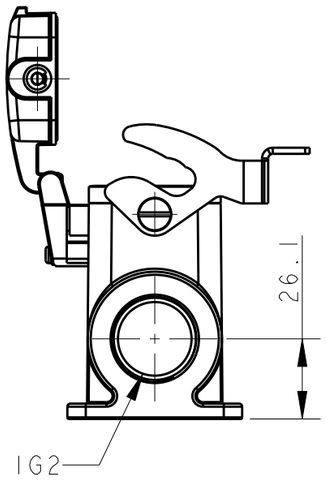

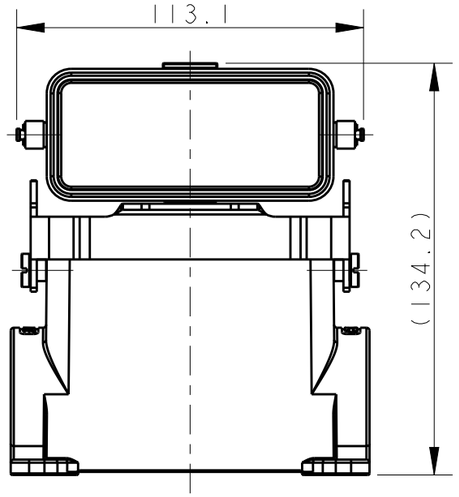

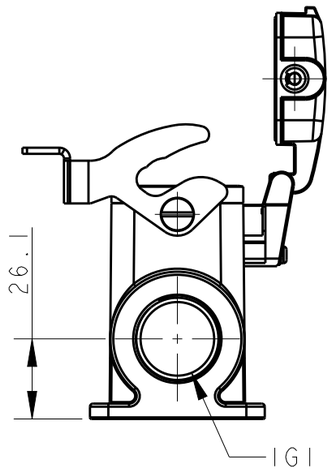

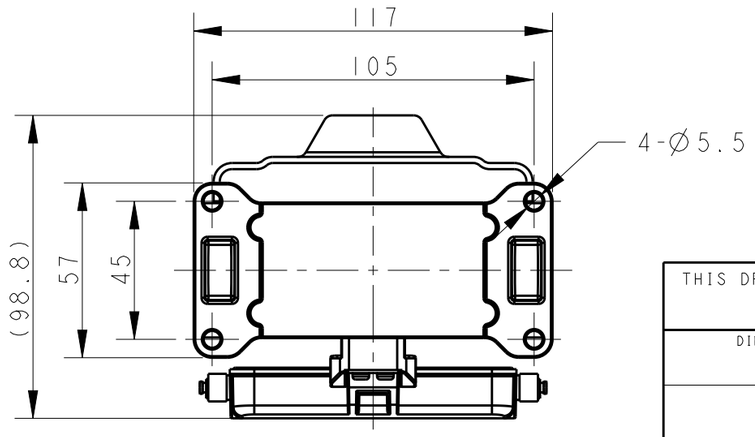

TYPE 1: TI660163XXX-100 HI6B-SDRHM-LB-PG/M
类型 1: TI660163XXX-100 HI6B下壳，表面安装，彩锌单扣，PG/M，高结构，带金属保护盖，灰色粉末喷涂

NOTES:
1. TECHNICAL CHARACTERISTICS:
   HOUSING MATERIAL: DIE CAST ALUMINIUM ALLOY
   SURFACE TREATMENT: POWDER COATED,GREY
   DEGREE OF PROTECTION: IP65 (MATED)

注释：
1. 技术参数：
   下壳材料： 铝合金
   表面处理： 粉末喷涂，灰色
   防护等级： IP65(配合)

THIS DRAWING IS A CONTROLLED DOCUMENT.

DIMENSIONS: mm

TOLERANCES UNLESS OTHERWISE SPECIFIED:
0 PLC ±-
1 PLC ±-
2 PLC ±-
3 PLC ±-
4 PLC ±-
ANGLES ±-

MATERIAL - -
FINISH - -

DWN DAVID LI 23JUN2015
CHK CHRIS WANG 23JUN2015
APVD XIANG XU 23JUN2015
PRODUCT SPEC 108-137013
APPLICATION SPEC 114-137013
WEIGHT -
Customer Drawing

TE Connectivity

NAME HI6B-SDRHM-LB-PG/M

SIZE	CAGE CODE	DRAWING NO	RESTRICTED TO
A3	-	C-TI66016XXXXX00	-

SCALE 1:2 SHEET 1 OF 3 REV A1

1470-19 (3/13)

THIS DRAWING IS UNPUBLISHED. RELEASED FOR PUBLICATION 20
© COPYRIGHT 20 BY - ALL RIGHTS RESERVED.

REVISIONS

P	LTR	DESCRIPTION	DATE	DWN	APVD
	-	SEE SHEET 1	-	-	-

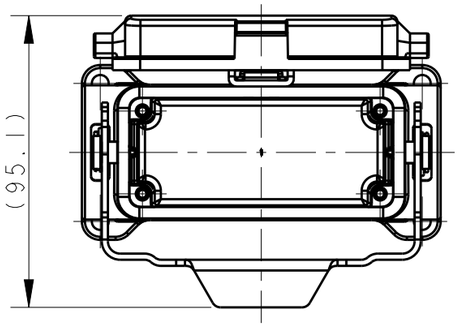

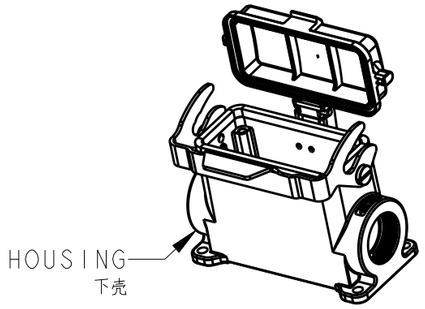

SCALE 3:10

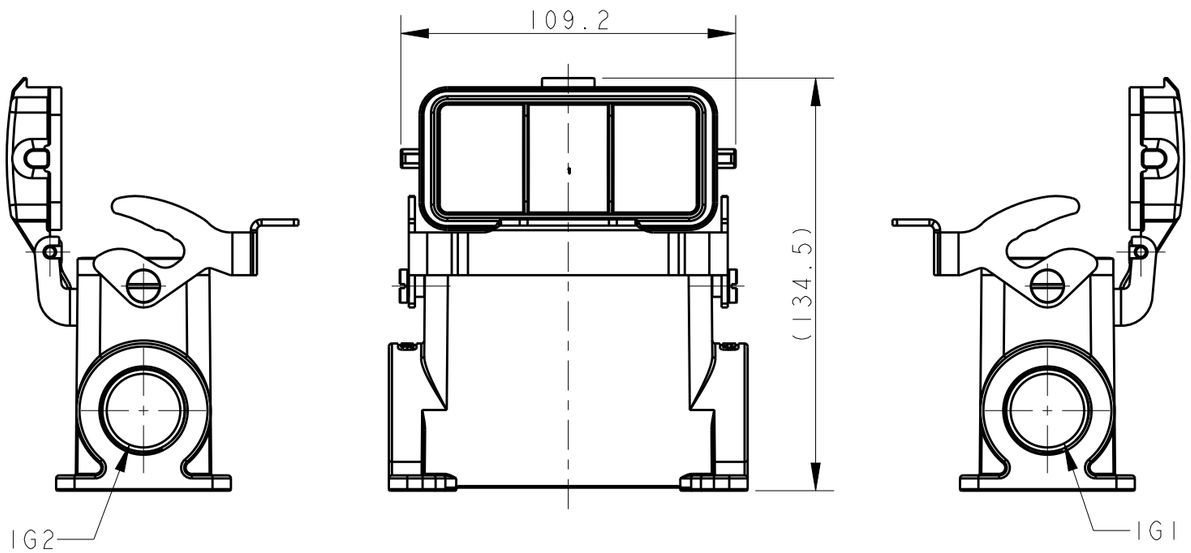

TYPE 2: T1660163XXX-000 H16B-SDRH-LB-PG/M
OTHER SPEC REFER TO TYPE 1
类型 2: T1660163XXX-000H16B下壳，表面安装，彩锌单扣，PG/M，
高结构，带塑料保护盖，灰色粉末喷涂，其余规范参照类型1

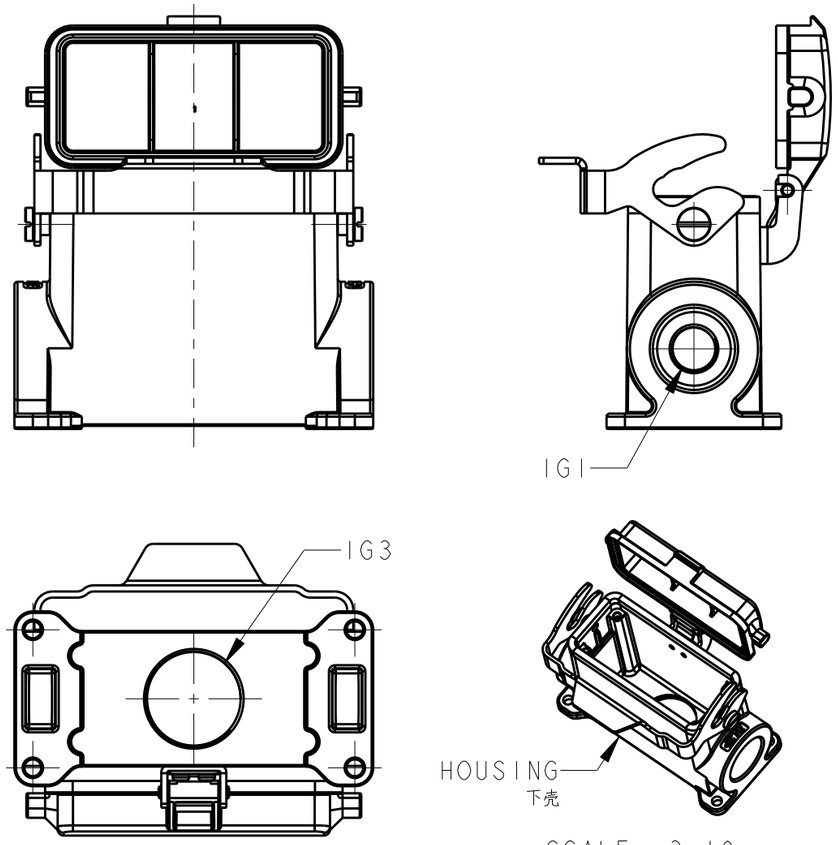

SCALE 3:10

TYPE 3: T1660160932-000 H16B-SDRH-LB-M32/PG9
OTHER SPEC REFER TO TYPE 2
类型 3: T1660160932-000 H16B下壳，表面安装，彩锌单扣，侧出PG9，
底出M32，高结构，带塑料保护盖，灰色粉末喷涂，其余规范参照类型2

THIS DRAWING IS A CONTROLLED DOCUMENT.

DIMENSIONS: mm

TOLERANCES UNLESS OTHERWISE SPECIFIED:
0 PLC ±-
1 PLC ±-
2 PLC ±-
3 PLC ±-
4 PLC ±-
ANGLES ±-

MATERIAL - -
FINISH - -

DWN DAVID LI 23JUN2015
CHK CHRIS WANG 23JUN2015
APVD XIANG XU 23JUN2015
PRODUCT SPEC 108-137013
APPLICATION SPEC 114-137013
WEIGHT -

Customer Drawing

TE Connectivity

NAME H16B-SDRHM-LB-PG/M

SIZE	CAGE CODE	DRAWING NO	RESTRICTED TO
A3	-	C-T166016XXXXX00	-

SCALE	SHEET	REV
1:2	2 OF 3	A1

1470-19 (3/13)

THIS DRAWING IS UNPUBLISHED. RELEASED FOR PUBLICATION 20
© COPYRIGHT 20 BY - ALL RIGHTS RESERVED.

REVISIONS

P	LTR	DESCRIPTION	DATE	DWN	APVD
	-	SEE SHEET 1	-	-	-

NOTES:

SEE SHEET 1

注释:

参照 SHEET 1

PART NUMBER 料号	PART DESCRIPTION 描述		IG1	IG2	IG3	TYPE 类型
T1660163121-100	H16B-SDRHM-LB-PG21	H16B HOUSING,SURFACE MOUNTED,METAL SINGLE LOCKING,PG21,HIGH CONSTRUCTION,METAL PROTECTION COVER,POWDER COATED,GREY H16B下壳,表面安装,彩锌单扣,PG21,高结构,带金属保护盖,灰色粉末喷涂	PG21	-	-	TYPE 1 类型1
T1660163129-100	H16B-SDRHM-LB-PG29	H16B HOUSING,SURFACE MOUNTED,METAL SINGLE LOCKING,PG29,HIGH CONSTRUCTION,METAL PROTECTION COVER,POWDER COATED,GREY H16B下壳,表面安装,彩锌单扣,PG29,高结构,带金属保护盖,灰色粉末喷涂	PG29	-	-	
T1660163132-100	H16B-SDRHM-LB-M32	H16B HOUSING,SURFACE MOUNTED,METAL SINGLE LOCKING,M32,HIGH CONSTRUCTION,METAL PROTECTION COVER,POWDER COATED,GREY H16B下壳,表面安装,彩锌单扣,M32,高结构,带金属保护盖,灰色粉末喷涂	M32	-	-	
T1660163221-100	H16B-SDRHM-LB-2PG21	H16B HOUSING,SURFACE MOUNTED,METAL SINGLE LOCKING,2PG21,HIGH CONSTRUCTION,METAL PROTECTION COVER,POWDER COATED,GREY H16B下壳,表面安装,彩锌单扣,2PG21,高结构,带金属保护盖,灰色粉末喷涂	PG21	PG21	-	
T1660163229-100	H16B-SDRHM-LB-2PG29	H16B HOUSING,SURFACE MOUNTED,METAL SINGLE LOCKING,2PG29,HIGH CONSTRUCTION,METAL PROTECTION COVER,POWDER COATED,GREY H16B下壳,表面安装,彩锌单扣,2PG29,高结构,带金属保护盖,灰色粉末喷涂	PG29	PG29	-	
T1660163232-100	H16B-SDRHM-LB-2M32	H16B HOUSING,SURFACE MOUNTED,METAL SINGLE LOCKING,2M32,HIGH CONSTRUCTION,METAL PROTECTION COVER,POWDER COATED,GREY H16B下壳,表面安装,彩锌单扣,2M32,高结构,带金属保护盖,灰色粉末喷涂	M32	M32	-	
T1660163121-000	H16B-SDRH-LB-PG21	H16B HOUSING,SURFACE MOUNTED,METAL SINGLE LOCKING,PG21,HIGH CONSTRUCTION,PLASTIC PROTECTION COVER,POWDER COATED,GREY H16B下壳,表面安装,彩锌单扣,PG21,高结构,带塑料保护盖,灰色粉末喷涂	PG21	-	-	TYPE 2 类型2
T1660163129-000	H16B-SDRH-LB-PG29	H16B HOUSING,SURFACE MOUNTED,METAL SINGLE LOCKING,PG29,HIGH CONSTRUCTION,PLASTIC PROTECTION COVER,POWDER COATED,GREY H16B下壳,表面安装,彩锌单扣,PG29,高结构,带塑料保护盖,灰色粉末喷涂	PG29	-	-	
T1660163125-000	H16B-SDRH-LB-M25	H16B HOUSING,SURFACE MOUNTED,METAL SINGLE LOCKING,M25,HIGH CONSTRUCTION,PLASTIC PROTECTION COVER,POWDER COATED,GREY H16B下壳,表面安装,彩锌单扣,M25,高结构,带塑料保护盖,灰色粉末喷涂	M25	-	-	
T1660163132-000	H16B-SDRH-LB-M32	H16B HOUSING,SURFACE MOUNTED,METAL SINGLE LOCKING,M32,HIGH CONSTRUCTION,PLASTIC PROTECTION COVER,POWDER COATED,GREY H16B下壳,表面安装,彩锌单扣,M32,高结构,带塑料保护盖,灰色粉末喷涂	M32	-	-	
T1660163221-000	H16B-SDRH-LB-2PG21	H16B HOUSING,SURFACE MOUNTED,METAL SINGLE LOCKING,2PG21,HIGH CONSTRUCTION,PLASTIC PROTECTION COVER,POWDER COATED,GREY H16B下壳,表面安装,彩锌单扣,2PG21,高结构,带塑料保护盖,灰色粉末喷涂	PG21	PG21	-	
T1660163229-000	H16B-SDRH-LB-2PG29	H16B HOUSING,SURFACE MOUNTED,METAL SINGLE LOCKING,2PG29,HIGH CONSTRUCTION,PLASTIC PROTECTION COVER,POWDER COATED,GREY H16B下壳,表面安装,彩锌单扣,2PG29,高结构,带塑料保护盖,灰色粉末喷涂	PG29	PG29	-	
T1660163232-000	H16B-SDRH-LB-2M32	H16B HOUSING,SURFACE MOUNTED,METAL SINGLE LOCKING,2M32,HIGH CONSTRUCTION,PLASTIC PROTECTION COVER,POWDER COATED,GREY H16B下壳,表面安装,彩锌单扣,2M32,高结构,带塑料保护盖,灰色粉末喷涂	M32	M32	-	
T1660160932-000	H16B-SDRH-LB-M32/PG9	H16B HOUSING,SURFACE MOUNTED,METAL SINGLE LOCKING,SIDE ENTRY PG9,BOTTOM ENTRY M32,HIGH CONSTRUCTION,PLASTIC PROTECTION COVER,POWDER COATED,GREY / H16B下壳,表面安装,彩锌单扣,侧出PG9,底出M32,高结构,带塑料保护盖,灰色粉末喷涂	PG9	-	M32	TYPE 3 类型3

THIS DRAWING IS A CONTROLLED DOCUMENT.

DIMENSIONS: mm

TOLERANCES UNLESS OTHERWISE SPECIFIED:
0 PLC ±-
1 PLC ±-
2 PLC ±-
3 PLC ±-
4 PLC ±-
ANGLES ±-

MATERIAL - -

FINISH - -

DWN DAVID LI 23JUN2015
CHK CHRIS WANG 23JUN2015
APVD XIANG XU 23JUN2015

PRODUCT SPEC 108-137013

APPLICATION SPEC 114-137013

WEIGHT -

TE Connectivity

NAME H16B-SDRHM-LB-PG/M

SIZE	CAGE CODE	DRAWING NO	RESTRICTED TO
A3	-	C-T166016XXXXX00	-

CUSTOMER DRAWING

SCALE 1:2 SHEET 3 OF 3 REV A1

1470-19 (3/13)