THIS DRAWING IS UNPUBLISHED. RELEASED FOR PUBLICATION ,19 .
© COPYRIGHT 19 By – ALL RIGHTS RESERVED.

REVISIONS

P	LTR	DESCRIPTION	DATE	DWN	APVD
	F5	REVISE PER ECR-17-006818	10MAY17	HX	WH

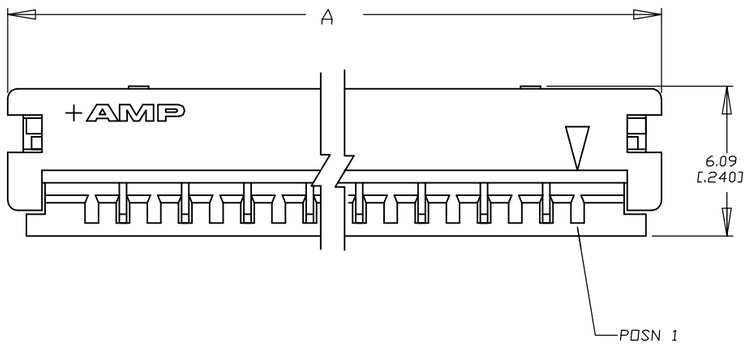

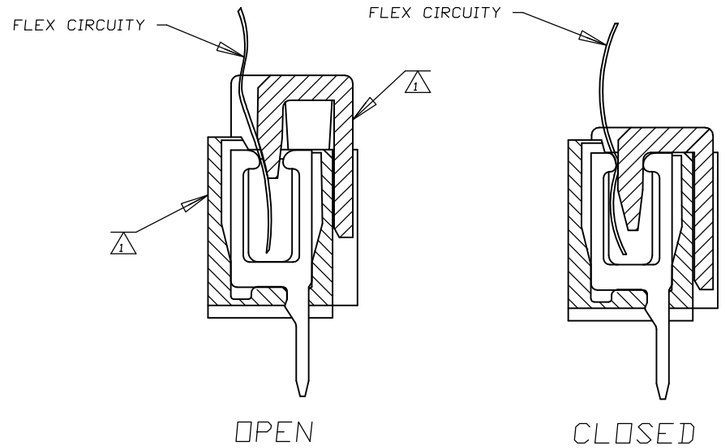

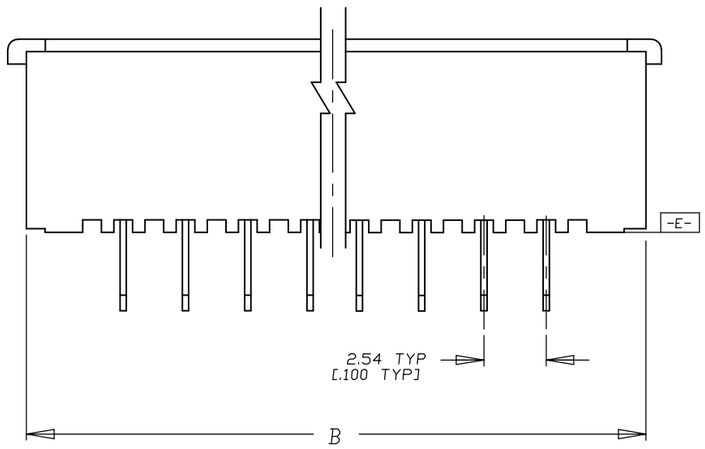

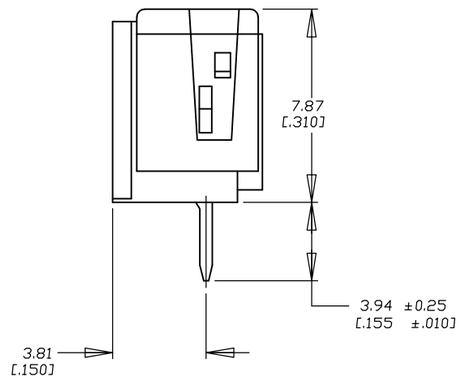

	'B'		'A'		NO OF POSN	PART NUMBER
	23.11	[0.910]	24.64	[0.970]	7	1-487925-4
	51.05	[2.010]	52.58	[2.070]	18	1-487925-3
	12.95	[.510]	14.48	[.570]	3	1-487925-2
	43.43	[1.710]	44.96	[1.770]	15	1-487925-1
OBSOLETE	~~38.35~~	~~[1.510]~~	~~39.88~~	~~[1.570]~~	~~13~~	~~1-487925-0~~
	35.81	[1.410]	37.34	[1.470]	12	487925-9
	33.27	[1.310]	34.80	[1.370]	11	487925-8
OBSOLETE	~~28.19~~	~~[1.110]~~	~~29.72~~	~~[1.170]~~	~~9~~	~~487925-7~~
	30.73	[1.210]	32.26	[1.270]	10	487925-6
	61.21	[2.410]	62.74	[2.470]	22	487925-5
OBSOLETE	~~56.13~~	~~[2.210]~~	~~57.66~~	~~[2.270]~~	~~20~~	~~487925-4~~
	45.97	[1.810]	47.50	[1.870]	16	487925-3
	40.89	[1.610]	42.42	[1.670]	14	487925-2
	25.65	[1.010]	27.18	[1.070]	8	487925-1

1. FLAME RETARDANT THERMOPLASTIC; COLOR-BLACK
2. FINISH: 0.00381 [.000150] MIN THK TIN OVER 0.00127 [.000050] MIN THK NICKEL ON ENTIRE CONTACT.
3. CONNECTOR SUPPLIED IN CLOSED CONDITION.

THIS DRAWING IS A CONTROLLED DOCUMENT.

DIMENSIONS: mm

TOLERANCES UNLESS OTHERWISE SPECIFIED:

0 PLC	± –
1 PLC	± –
2 PLC	± –
3 PLC	± .005
4 PLC	± –
ANGLES	± –

MATERIAL: HOUSING&STUFFER: 1 CONTACTS: PH/Br

FINISH: CONTACTS 2

DWN D.KEITZER 30OCT89
CHK C OBERMAN 2NOV89
APVD SE IFONG
PRODUCT SPEC 108-16025
APPLICATION SPEC 114-16014
WEIGHT –

TE Connectivity

NAME: CONNECTOR ASSEMBLY, .100CL, ZIF-LINE 50 –

SIZE	CAGE CODE	DRAWING NO	RESTRICTED TO
A3	00779	C-487925	–

CUSTOMER DRAWING | SCALE 8:1 | SHEET 1 OF 1 | REV F5