THIS DRAWING IS UNPUBLISHED. RELEASED FOR PUBLICATION -
© COPYRIGHT copyright_dBYe- ALL RIGHTS RESERVED.

REVISIONS

P	LTR	DESCRIPTION	DATE	DWN	APVD
	B1	REVISED PER ECR-16-011494	20JUN2017	NK	CX

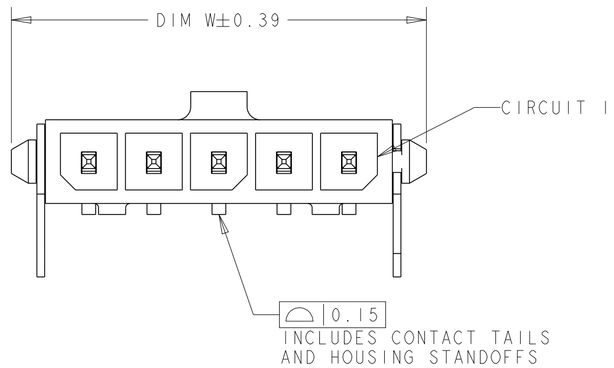

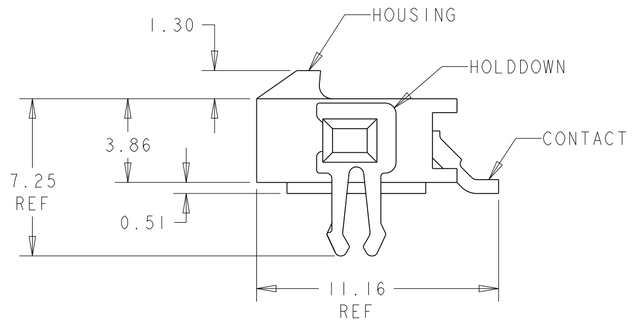

1. MATERIAL: CONTACTS - BRASS
HOUSING - UL 94V-O RATED HIGH TEMP NYLON, COLOR BLACK.
HOLDDOWNS: - PHOSPHOR BRONZE.

2. PLATING: CONTACTS - 0.38µm MINIMUM GOLD ON MATING END, 2.54µm MINIMUM TIN LEAD ON SOLDER TAILS, BOTH OVER 1.27µm MINIMUM NICKEL.
HOLDDOWNS: 2.54µm MINIMUM TIN-LEAD OVER 1.27µm MINIMUM NICKEL.

4. RECOMMENDED PC BOARD THICKNESS OF 1.57.

5. PLATING: CONTACTS - 0.38µm MINIMUM GOLD ON MATING END, 2.54µm MINIMUM MATTE TIN ON SOLDER TAILS, BOTH OVER 1.27µm MINIMUM NICKEL.
HOLDDOWNS: 2.54µm MINIMUM MATTE TIN OVER 1.27µm MINIMUM NICKEL.

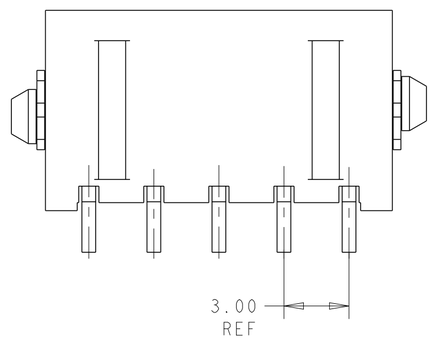

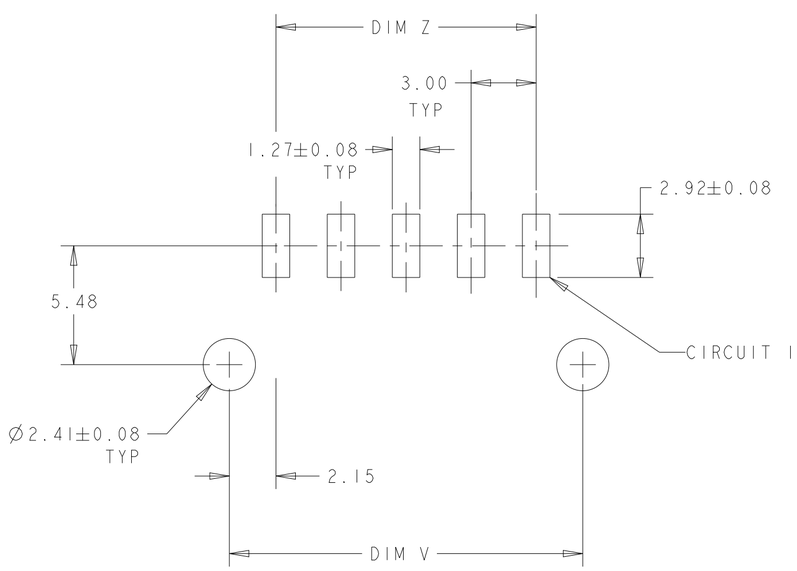

PCB LAYOUT COMPONENT SIDE 4

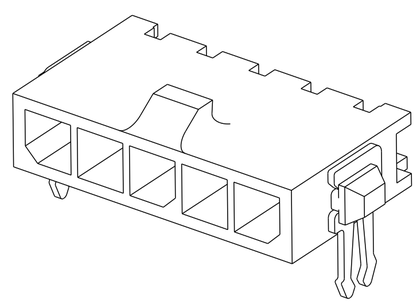

	5	33.00	37.43	40.00	12	3-1445090-2
	5	30.00	34.43	37.00	11	3-1445090-1
	5	27.00	31.43	34.00	10	3-1445090-0
	5	24.00	28.43	31.00	9	2-1445090-9
	5	21.00	25.43	28.00	8	2-1445090-8
	5	18.00	22.43	25.00	7	2-1445090-7
	5	15.00	19.43	22.00	6	2-1445090-6
	5	12.00	16.43	19.00	5	2-1445090-5
	5	9.00	13.43	16.00	4	2-1445090-4
	5	6.00	10.43	13.00	3	2-1445090-3
	5	3.00	7.43	10.00	2	2-1445090-2
SUPERSEDED BY 3-1445090-2	2	33.00	37.43	40.00	12	~~1-1445090-2~~
SUPERSEDED BY 3-1445090-1	2	30.00	34.43	37.00	11	~~1-1445090-1~~
SUPERSEDED BY 3-1445090-0	2	27.00	31.43	34.00	10	~~1-1445090-0~~
SUPERSEDED BY 2-1445090-9	2	24.00	28.43	31.00	9	~~1445090-9~~
SUPERSEDED BY 2-1445090-8	2	21.00	25.43	28.00	8	~~1445090-8~~
SUPERSEDED BY 2-1445090-7	2	18.00	22.43	25.00	7	~~1445090-7~~
SUPERSEDED BY 2-1445090-6	2	15.00	19.43	22.00	6	~~1445090-6~~
SUPERSEDED BY 2-1445090-5	2	12.00	16.43	19.00	5	~~1445090-5~~
SUPERSEDED BY 2-1445090-4	2	9.00	13.43	16.00	4	~~1445090-4~~
SUPERSEDED BY 2-1445090-3	2	6.00	10.43	13.00	3	~~1445090-3~~
SUPERSEDED BY 2-1445090-2	2	3.00	7.43	10.00	2	~~1445090-2~~
	FINISH	DIM Z	DIM V	DIM W	NO. OF POSN	PART NUMBER

THIS DRAWING IS A CONTROLLED DOCUMENT.

DIMENSIONS: mm

TOLERANCES UNLESS OTHERWISE SPECIFIED:
0 PLC ±-
1 PLC ±-
2 PLC ±0.13
3 PLC ±-
4 PLC ±-
ANGLES ±-

MATERIAL 1

FINISH SEE TABLE

DWN J. ROOT 09OCT2000
CHK K. WHITAKER 17-APR-2001
APVD C. JONES 17-APR-2001
PRODUCT SPEC -
APPLICATION SPEC -
WEIGHT -

TE Connectivity

NAME RIGHT ANGLE SURF MOUNT HEADER ASSY, 0.38 MIC GOLD CONTACTS, W/THRU HOLE HOLDDOWNS, SGL ROW, MICRO MATE-N-LOK™

SIZE	CAGE CODE	DRAWING NO	RESTRICTED TO
A2	00779	C-1445090	-

CUSTOMER DRAWING SCALE 5:1 SHEET 1 OF 1 REV B1

1471-9 (3/13)