| REVISIONS | | | | | |
|---|---|---|---|---|---|
| ZONE | LTR | ECO | DESCRIPTION | DATE | APPROVED |
| | A | 20709 | PROD. RELEASE 3-5-76 DWH | 3-8-76 | MO |
| | A1 | 43626 | REMOVED DELRIN PLUG,SEE ECN | 12/26/7 | TL |
| | B | 44061 | Update per ECO-10-021750 | 11/1/2010 | PJS |

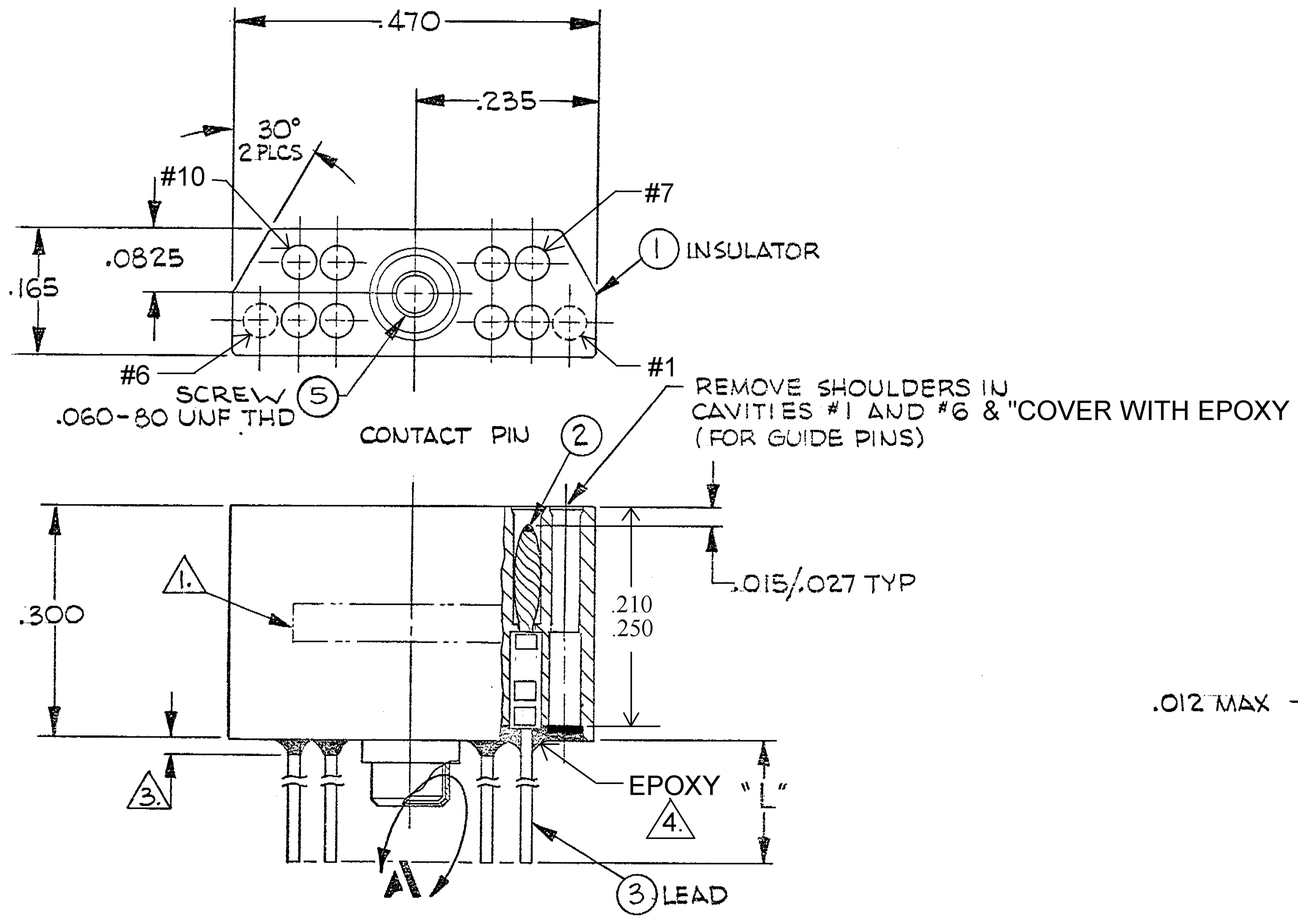


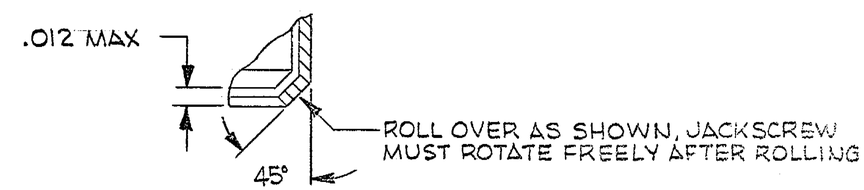


DETAIL A SCALE ~ NONE

NOTES:

1. MARK PER TPD.

2. CRIMP LEADS INTO CONTACTS PER MEP 302-05

3. EPOXY WICKING - UNINSULATED WIRE - .050 MAX
INSULATED WIRE UP TO #25 AWG - .125 MAX
INSULATED WIRE #24 AWG AND LARGER - .200 MAX

4. EPOXY AS SHOWN WITH P/N: 983527-1 AND/OR 1325708-1.

| QTY REQD | CODE IDENT | PART OR IDENTIFYING NO. | NOMENCLATURE OR DESCRIPTION |
|---|---|---|---|

PARTS LIST

| NEXT ASSY | USED ON |
|---|---|
| APPLICATION | |

UNLESS OTHERWISE SPECIFIED DIMENSIONS ARE IN INCHES TOLERANCES ARE:
FRACTIONS ± 1/64 DECIMALS .XX ± .01 .XXX ± .005 ANGLES ± 1/2°

MATERIAL

FINISH

DO NOT SCALE DRAWING

CONTRACT NO.

| APPROVALS | | DATE |
|---|---|---|
| DRAWN | David Hooper | 3/5/76 |
| CHECKED | MO | 3-9-76 |
| PR. ENG | M Adams 14 | 3-8-76 |
| APPD. | | |

These drawings and specifications are the property of Microdot Inc., and issued in strict confidence and shall not be divulged, be reproduced or copied, or used as the basis for the manufacture or sale of any article without written permission of Microdot Inc.

Tyco Electronics
Tyco Electronics Corporation
Harrisburg, PA 17105-3608

JACKMATE PLUG ASSY
MCJB2-10P
095-0000-0132

PROD. CODE 834
CODE M

| SIZE | CODE IDENT NO. | DRAWING NO. |
|---|---|---|
| B | 98278 | 9-1532147-8 |

SCALE ——— SHEET 1 OF 1

BISHOP GRAPHICS/ACCUPRESS REORDER NO. 2197