REVISIONS					
ZONE	LTR	ECO	DESCRIPTION	DATE	APPROVED
	A	20709	PROD. RELEASE 3-5-76 DWH	3-8-76	MO
	A1	43626	REMOVED DELRIN PLUG,SEE ECN	12/26/7	TL
	B	44061	Update per ECO-10-021750	11/1/2010	PJS

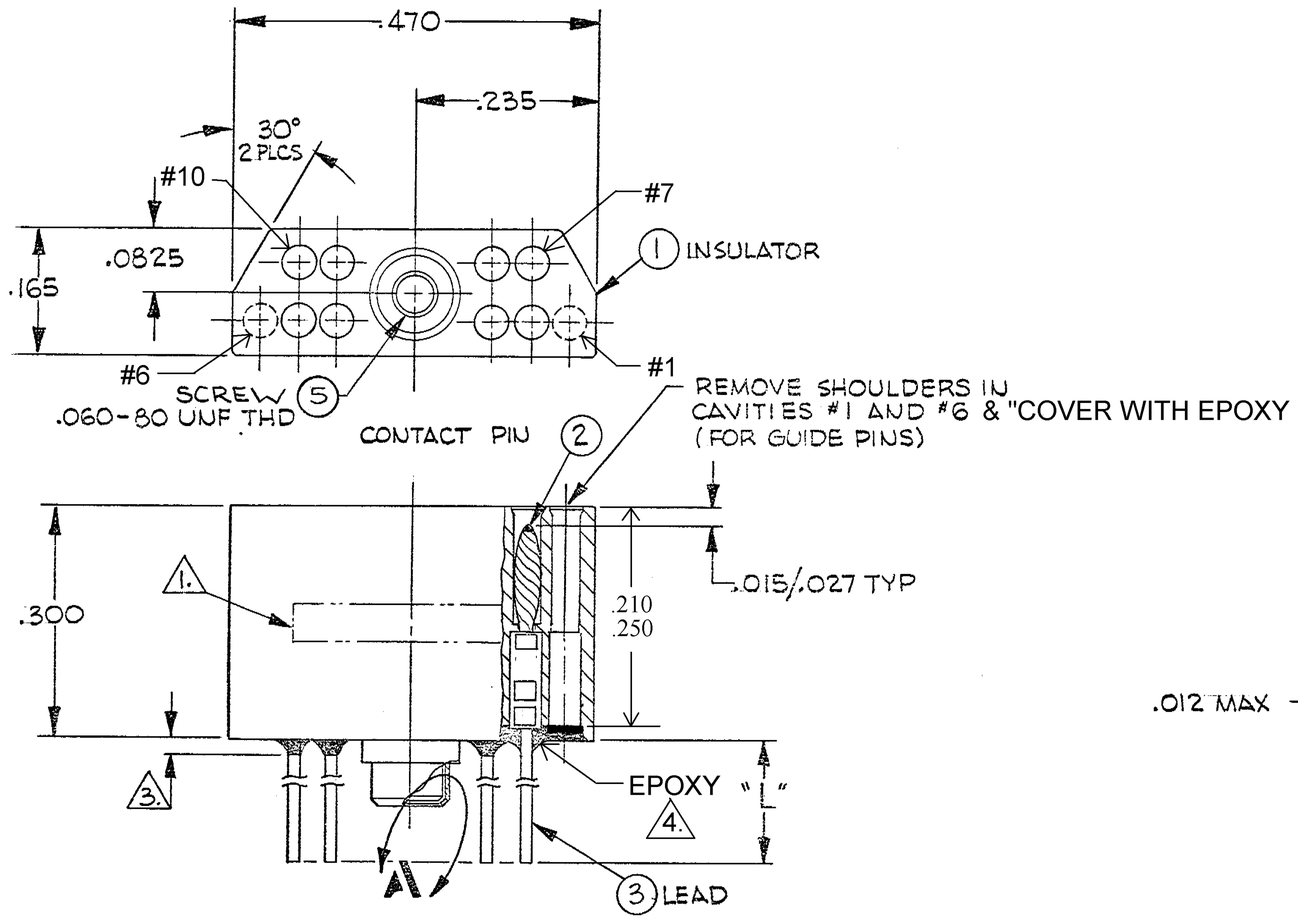

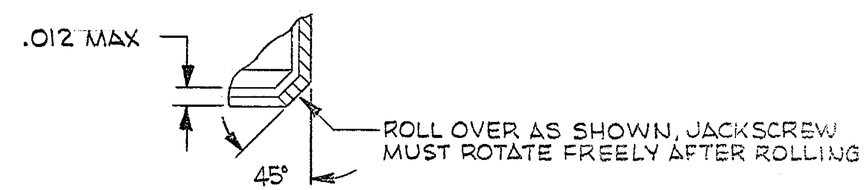

DETAIL A SCALE ~ NONE

NOTES:

1. MARK PER TPD.

2. CRIMP LEADS INTO CONTACTS PER MEP 302-05

3. EPOXY WICKING - UNINSULATED WIRE - .050 MAX
INSULATED WIRE UP TO #25 AWG - .125 MAX
INSULATED WIRE #24 AWG AND LARGER - .200 MAX

4. EPOXY AS SHOWN WITH P/N: 983527-1 AND/OR 1325708-1.

QTY REQD	CODE IDENT	PART OR IDENTIFYING NO.	NOMENCLATURE OR DESCRIPTION

PARTS LIST

NEXT ASSY	USED ON
APPLICATION	

UNLESS OTHERWISE SPECIFIED DIMENSIONS ARE IN INCHES TOLERANCES ARE:
FRACTIONS ± 1/64 DECIMALS .XX ± .01 .XXX ± .005 ANGLES ± 1/2°

MATERIAL

FINISH

DO NOT SCALE DRAWING

CONTRACT NO.

APPROVALS		DATE
DRAWN	David Hooper	3/5/76
CHECKED	MO	3-9-76
PR. ENG	M Adams 14	3-8-76
APPD.		

These drawings and specifications are the property of Microdot Inc., and issued in strict confidence and shall not be divulged, be reproduced or copied, or used as the basis for the manufacture or sale of any article without written permission of Microdot Inc.

Tyco Electronics
Tyco Electronics Corporation
Harrisburg, PA 17105-3608

JACKMATE PLUG ASSY
MCJB2-10P
095-0000-0132

PROD. CODE 834
CODE M

SIZE	CODE IDENT NO.	DRAWING NO.
B	98278	9-1532147-8

SCALE ——— SHEET 1 OF 1

BISHOP GRAPHICS/ACCUPRESS REORDER NO. 2197