THIS DRAWING IS UNPUBLISHED. RELEASED FOR PUBLICATION 20
© COPYRIGHT 20 BY - ALL RIGHTS RESERVED.

REVISIONS

P	LTR	DESCRIPTION	DATE	DWN	APVD
	A	INITIAL RELEASE	23JUN2015	DL	CW

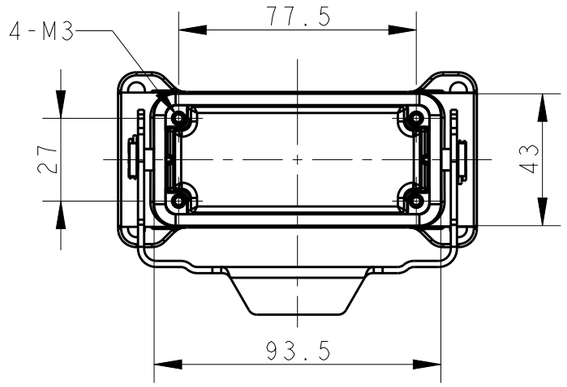

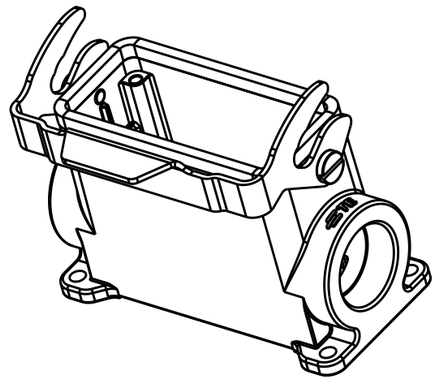

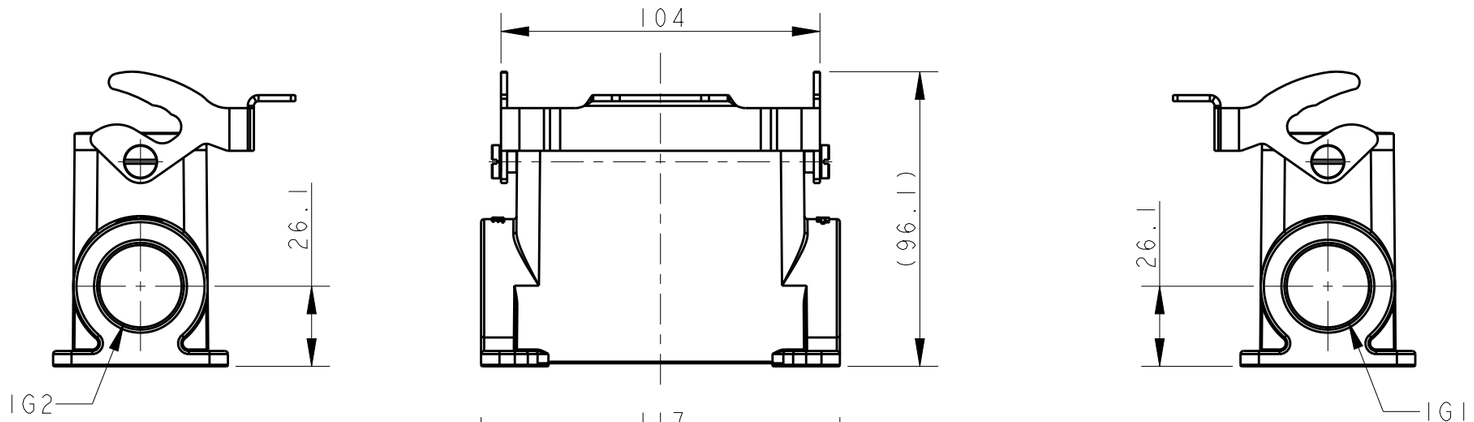

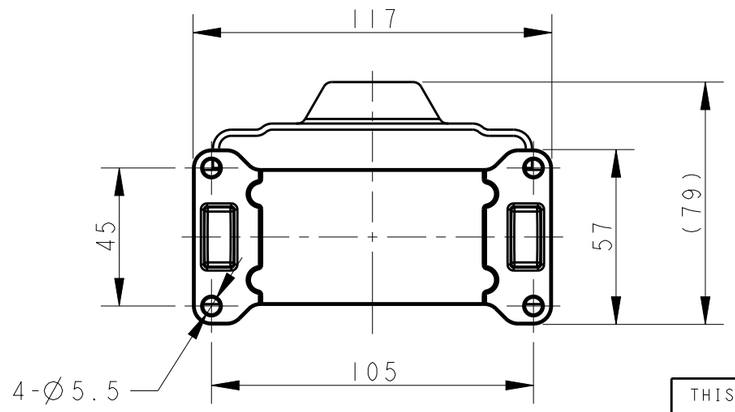

NOTES:
1. TECHNICAL CHARACTERISTICS:
   BODY MATERIAL: DIE CAST ALUMINIUM ALLOY
   SURFACE TREATMENT: POWDER-COATED, GRAY
   OPERATION TEMPERATURE: -40-+125°C
   DEGREE OF PROTECTION: IP65 (MATED)

注释：
1. 技术参数：
   主体材料： 铝合金
   表面处理： 粉末喷涂， 灰色
   工作温度： -40-+125°C
   防护等级： IP65(配合)

T1650163121-000	H16B-SGRH-LB-PG21	PG21	-
T1650163129-000	H16B-SGRH-LB-PG29	PG29	-
T1650163132-000	H16B-SGRH-LB-M32	M32	-
T1650163221-000	H16B-SGRH-LB-2PG21	PG21	PG21
T1650163229-000	H16B-SGRH-LB-2PG29	PG29	PG29
T1650163232-000	H16B-SGRH-LB-2M32	M32	M32
ASSEMBLY PART NUMBER	ASSEMBLY PART DESCRIPTION	IG1	IG2

THIS DRAWING IS A CONTROLLED DOCUMENT.

DIMENSIONS: mm

TOLERANCES UNLESS OTHERWISE SPECIFIED:
0 PLC ±-
1 PLC ±-
2 PLC ±-
3 PLC ±-
4 PLC ±-
ANGLES ±-

MATERIAL: TBD -
FINISH: - -

DWN DAVID LI 23JUN2015
CHK CHRIS WANG 23JUN2015
APVD XU XIANG 23JUN2015
PRODUCT SPEC 108-137013
APPLICATION SPEC 114-137013
WEIGHT -

CUSTOMER DRAWING

TE Connectivity

NAME H16B-SGRH-LB-PG/M

SIZE	CAGE CODE	DRAWING NO	RESTRICTED TO
A3	-	C-T1650163XXX000	-

SCALE 1:2 SHEET 1 OF 1 REV A