112416	REVISIONS				
DRAWING NO.	REV	DESCRIPTION	DATE	ECO	APPR
THIRD ANGLE PROJ.	A	UPDATE DRAWING FORMAT/MODIFY BODY	02/12/04		
	B	REVISE BACK HOUSING SHOWING BACK CONTACT PINS CAPTIVATED	06/28/07		
	C	HARDWARES REMOVED	19-Jan-10	2012	NMV

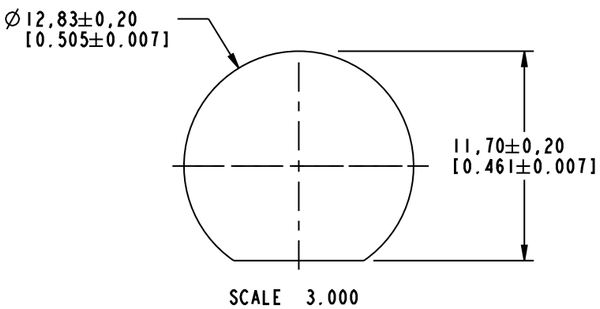

RECOMMENDED MOUNTING HOLE

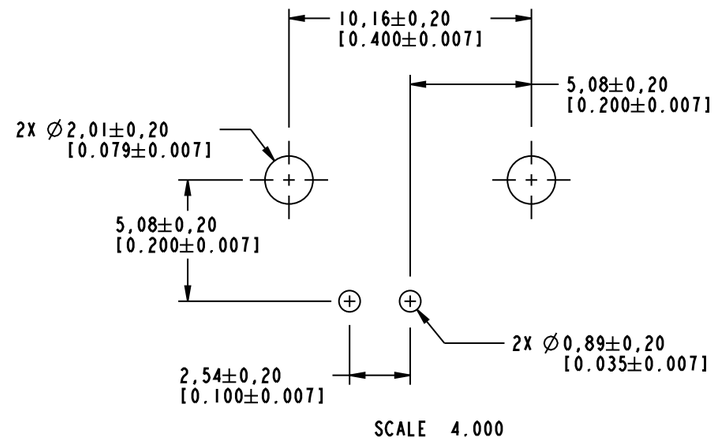

PCB MOUNTING HOLES

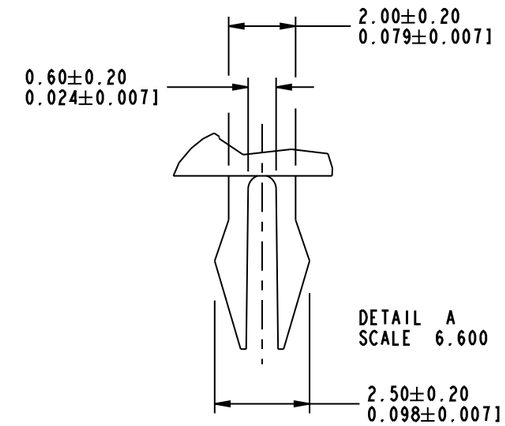

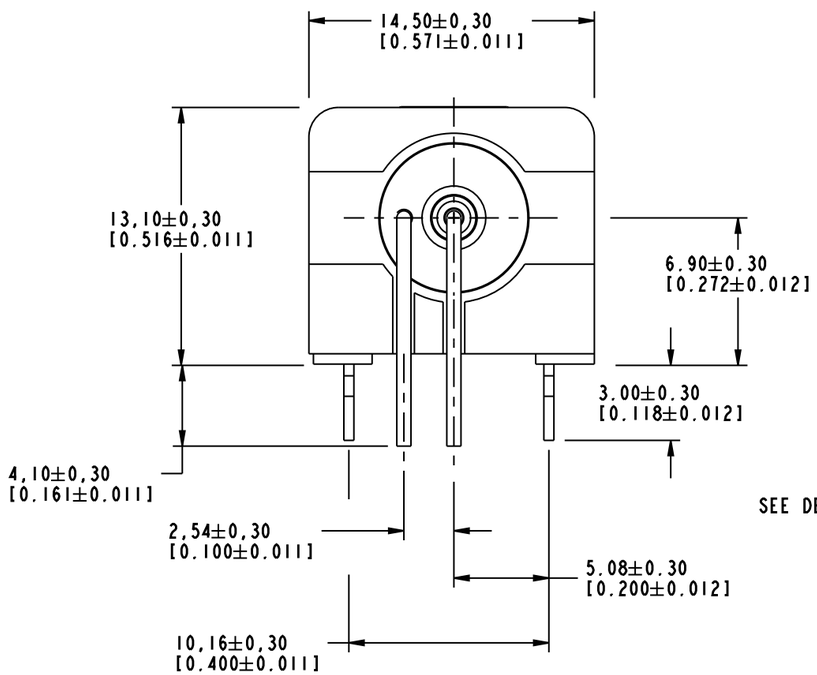

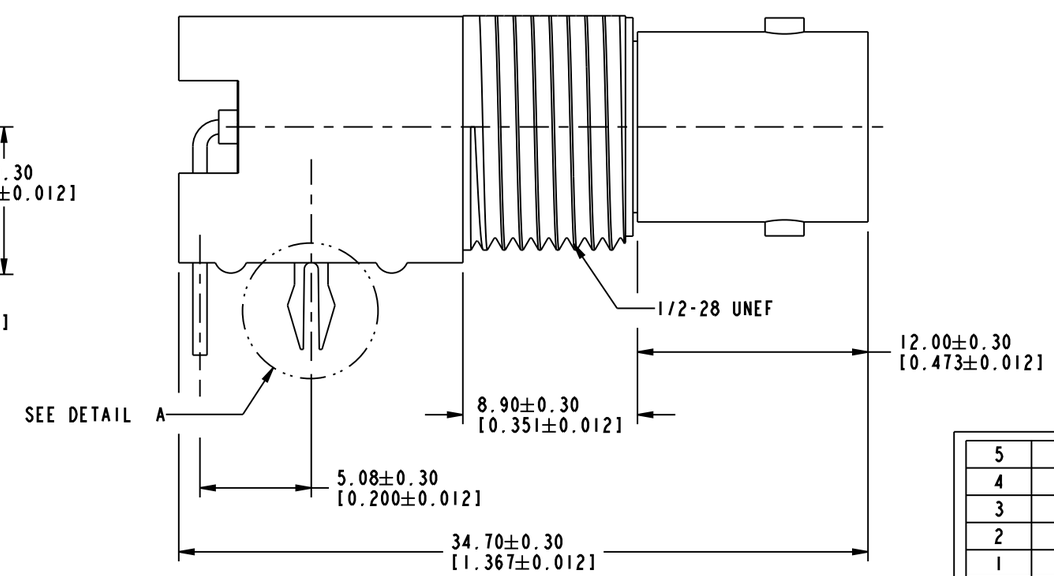

ITEM	DESCRIPTION	MATERIAL	FINISH	QTY
5	MOUNTING POST	BRASS	TIN PLATED	1
4	CONTACT PIN	PHOSPHOROUS BRONZE	GOLD	1
3	INSULATOR	P.P	NATURAL	1
2	BODY	ZINC DIE CAST	NICKEL	1
1	HOUSING	P.B.T	WHITE	1

UNLESS OTHERWISE SPECIFIED, DIMENSIONS ARE IN INCHES AND TOLERANCES ARE:
2 PLACE DECIMAL ±.015 (0,381 mm) 3 PLACE DECIMAL ±.005 (0,127 mm) ANGLES ± 1°

NOTICE - These drawings, specifications, or other data (1) are, and remain the property of Amphenol Corp, (2) must be returned upon request; and (3) are confidential and not to be disclosed to any person other than those to whom they are given by Amphenol Corp. The furnishing of these drawings, specifications, or other data by Amphenol Corp., or to any other person to anyone for any purpose is not to be regarded by implication or otherwise in any manner licensing, granting rights or permitting such holder or any other person to manufacture, use or sell any product, process or design, patented or otherwise, that may in any way be related to or disclosed by said drawings, specifications, or other data.

MATERIAL

REFERENCE

DRAWN NISCHIT MV	DATE 19-Jan-10	
ENGINEER NISCHIT MV	DATE 19-Jan-10	
APPROVED	DATE	
CAD FILE Root Folder/BNC/112416	DWG SIZE B	DRAWING NO. 112416

TITLE
BNC R/A PC MOUNT RECEPTACLE JACK

Amphenol Connex

SCALE: 3.3:1 SHEET 1 OF 1

REV C