THIS DRAWING IS UNPUBLISHED.
VERTRAULICHE UNVEROEFFENTLICHTE ZEICHNUNG
RELEASED FOR PUBLICATION
FREI FUER VEROEFFENTLICHUNG
-,- .
© COPYRIGHT – TE Connectivity
ALL RIGHTS RESERVED.
ALLE RECHTE VORBEHALTEN

REVISIONS
AENDERUNGEN

P	LTR	DESCRIPTION BESCHREIBUNG	DATE	DWN	APVD
	A9	REVISED PER ECR-17-013084	02APR18	NG	MKO

NOTES:

1 Material: zink diecast
Seals: NEOPRENE

2 SURFACE: HAMMER SCALES VARNISH
OR PODWER COATED
CORROSION PROTECTION

3 PACKAGING:
PACKAGING QUANTITY: 5 PIECES

4 SPECIAL PACKAGING: Krauss-Maffei
PACKAGING UNIT: 100 PIECES IN Krauss-Maffei-Box

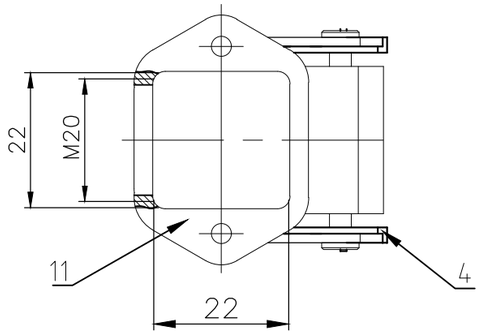

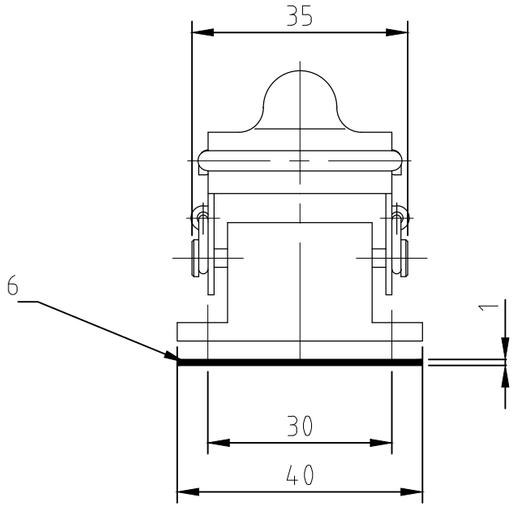

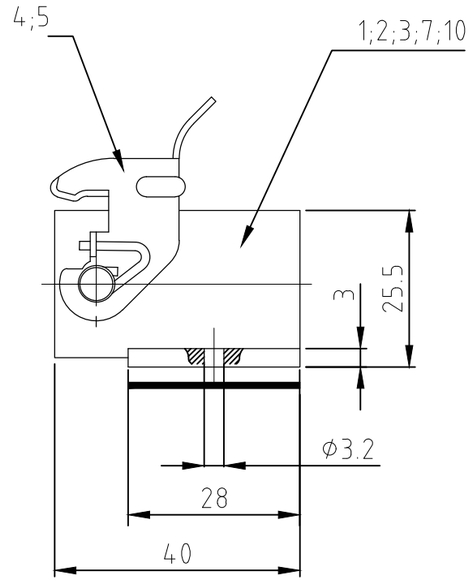

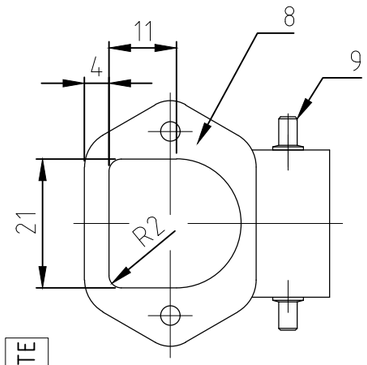

Panel cut-out for PN 0-4

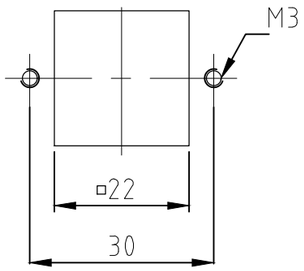

Panel cut-out

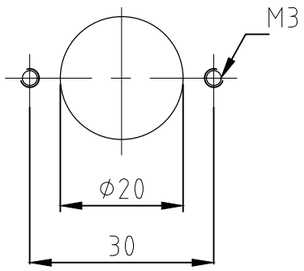

Panel cut-out
nur für PN 7-2

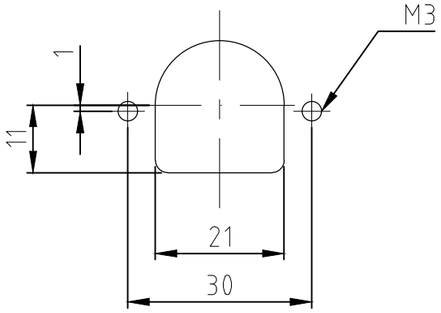

0-4	0-2	0-3	0-1	7-2	8-2	6-2	2-2	1-2	DESCRIPTION	MATERIAL	SURFACE	COLOR	ITEM NO. POS.	NOTES
OBSOLETE		OBSOLETE				OBSOLETE				1	2	2		
1									surface mounted housing side and bottom entry	zinc diecast		grey	11	
		1							surface mounted housing bottom entry	zinc diecast	blue passivation	without varnish	10	
				2					Bügelbolzen/clip bolt	steel		blue	9	
				1					surface mounted housing bottom entry	zinc diecast		grey	8	
					1				surface mounted housing bottom entry	zinc diecast		alufarbig	7	
1	1	1	1	1	1	1	1	1	Flanschdichtung/flanged seal	Neoprene		black	6	
	1	1	1		1		1		side clip	stainless steel	blank		5	
1						1		1	side clip	steel	zink plated	blue	4	
	1		1			1			surface mounted housing bottom entry			without varnish	3	
							1		surface mounted housing bottom entry			black	2	
								1	surface mounted housing bottom entry	zinc diecast		grey	1	
3	4	3	3	3	3	3	3	3						
HA.3.AGW-LB.22x22.1.M20.B	HA.3.AGW-LB.KM	HA-EMV-K.3.AGW-LB	HA.3.AGW-LB-SO	HA.3.AGW-SO	HA-K.3.AGW-LB-SO	HA.3.AGW-LB-SO	HA-K.3.AGW-LB	HA.3.AGW-LB	ORDERING TEXT / BESTELLTEXT					

THIS DRAWING IS A CONTROLLED DOCUMENT.
DIESE ZEICHNUNG IST EIN KONTROLLIERTES DOKUMENT.

DIMENSIONS: MASSE\NHEITEN: mm

TOLERANCES UNLESS OTHERWISE SPECIFIED: ALLGEMEINTOLERANZEN
0 PLC ± –
1 PLC ± –
2 PLC ± –
3 PLC ± –
4 PLC ± –
ANGLES / WINKEL ± –

MATERIAL –

FINISH/OBERFLAECHE/FARBE –

DWN Schneider 03.11.1999
CHK M Schweiger 03.11.1999
APVD –
PRODUCT SPEC PRODUKTSPEZ. 108-74000
APPLICATION SPEC. VERARBEITUNGSSPEZ. 114-74002
WEIGHT GEWICHT

TE Connectivity

NAME
SURFACE MOUNTED HOUSING BOTTOM ENTRY
ANBAUGEHAEUSE HA.3.AGW-LB
–

SIZE A3 | CAGE CODE 00779 | DRAWING NO ZEICHNUNGS-NR. C-1102107 | RESTRICTED TO NUR FUER –

CUSTOMER DRAWING/KUNDENZEICHNUNG | SCALE MASSSTAB 1:1 | SHEET BLATT 1 OF VON 1 | REV A9