THIS DRAWING IS UNPUBLISHED. RELEASED FOR PUBLICATION 2007
© COPYRIGHT 2007 . ALL RIGHTS RESERVED.

REVISIONS					
P	LTR	DESCRIPTION	DATE	DWN	APVD
	A14	Wrong dimensions in area B5-6 corrected to H=4.6 and K=5.1	27JUL2010	Kirs.	Schus
	A15	Design 2 added.	21DEC2011	Kirs.	Schus
	A16	Designs adapted. Crimp heigh to PN 962843 added. Drawing corrected.	01OCT2012	Kirs.	Merz
	A17	ECR-15-012070	13AUG2015	JBJH	BK

STRIP FORM
Bandware

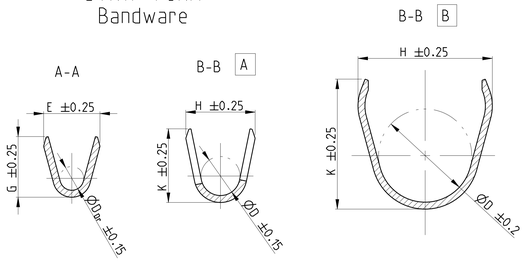

WIRE CRIMP
Drahtcrimp

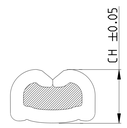

FLR-/FLK-WIRE
FLR-/FLK-Leitung

DESIGN 1
Ausfuehrung 1

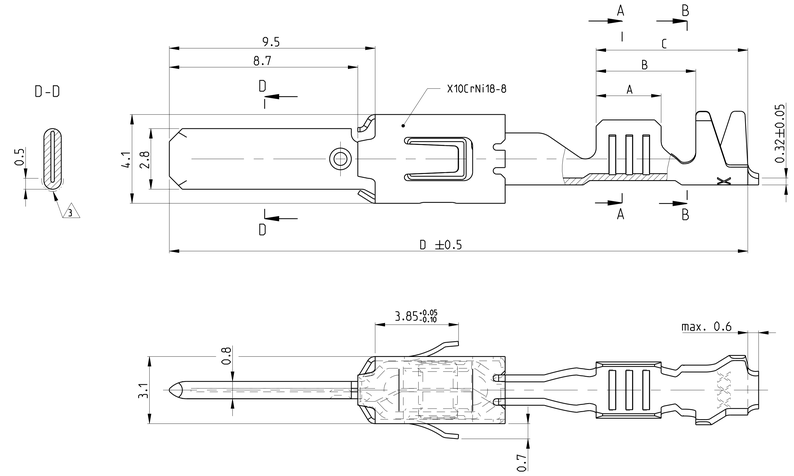

SINGLE WIRE SEAL
Einzeldichtungssystem

DESIGN 4
Ausfuehrung 4

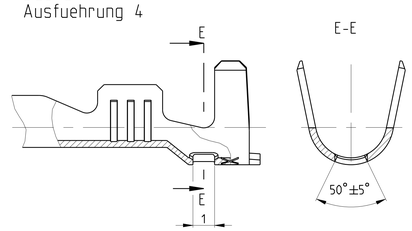

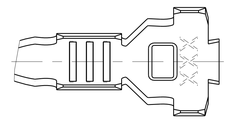

DESIGN 2
Ausfuehrung 2

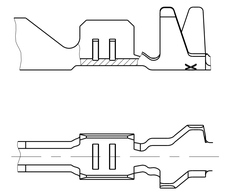

DESIGN 5
Ausfuehrung 5

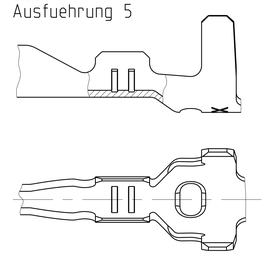

DESIGN 3
Ausfuehrung 3

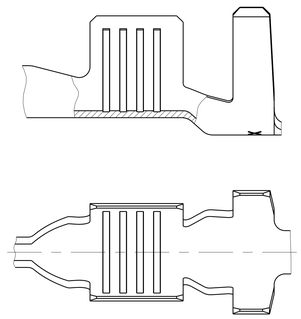

DESIGN 6
Ausfuehrung 6

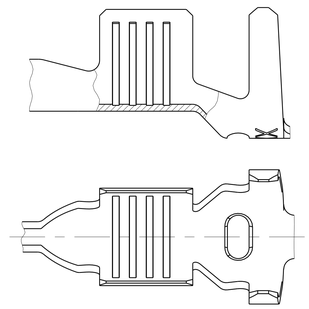

1. CONTACT AREA PRE SILVER MIN. 3µm
CANTILEVER SPRING PLAIN
Kontaktzone vorversilbert min. 3µm
Ueberfeder blank

2. CONTACT BODY Ni-PLATING MIN. 0.5µm; CONTACT AREA PRE-GOLD MIN. 0.6µm
OVER NICKEL; CRIMP AREA PRE-TIN
CANTILEVER SPRING PLAIN
Kontaktkoerper vernickelt min. 0.5µm; Kontaktzone vorvergoldet min. 0.6µm ueber Nickel
Crimpzone vorverzinnt; Ueberfeder blank

3. IN THIS AREA CRACK SHAPING AT THE SURFACE PERMISSIBLE
In diesem Bereich Rissbildung in der Oberflaeche zulaessig

4. PRE-TIN MIN. 1µm; CANTILEVER SPRING PLAIN
vorverzinnt min. 1µm; Ueberfeder blank

5. AWG 12 TXL 828905-1 OR / oder 282536-1
AWG 12 GXL 638865-1

6. ATTENTION! CONSTRUCTION OF THE CONTACT CAVITY IN THE AREA OF THE SINGLE WIRE SEAL IS Ø6.4$^{+0.1}_{-0.05}$
Achtung! Die Kammer ist im Bereich der Einzeldichtung auf Ø6.4$^{+0.1}_{-0.05}$ auszulegen

7. PUNCHED WITH VOLATILIZING STAMPING-OIL
Gestanzt mit verfluechtigendem Stanzoel

	TE ORDER-NO. STRIPFORM Bandware	REV	DESIGN Ausfuehrung	MATERIAL Werkstoff	SURFACE Oberflaeche	DGB mm²	INSULATIONØ Isolationsø mm	STRIP FORM WIRE CRIMP Drahtcrimp	STRIP FORM INSUL. CRIMP Isolationscrimp Bandware	WIRE CRIMP HEIGTH CH Drahtcrimphoehe CH	APPLICATION TOOL Anschlagwerkzeug	HAND TOOL Handzange	A	B	C	D	TE ORDER-NO. SINGLE WIRE SEAL Einzeldichtungssystem (CAVITY DIAMETER) (Kammerdurchmesser)	TE ORDER-NO. SEALING PLUG Blindstopfen
								CRIMP DIMENSION mm Crimpabmessungen mm			EXTRACTION TOOL Ausdrueckwerkzeug No. 968107-1							
SINGLE WIRE SEAL / Einzeldichtungssystem	1-1719504-2	A	4	CuSn4	1	12 AWG	max. 3.0	E = 4.0 G = 4.2 D_{Dr} = 2.0	A H = 5.3 K = 5.0 D = 3.6	AWG 12 = 2.0	1852291-3	-	3.5	6.0	7.6	26.8	5	828922-1
	1-1719504-1	A	4		4													
	3-968947-1	A	6	CuSn0.20	4	>2.5 - 4.0 FLR	max. 3.7	E = 4.5 G = 4.7 D_{Dr} = 2.3	B H = 6.2 K = 6.0 D = 4.3	4.0 mm² = 2.25	MQC APPLICATOR 2-541537-2	539635-1 MATRIZE : 539727-2	4.3	6.9	8.5	28.5	828985 (Ø6.4) 6	828986-1
	2-968947-2	A	6	CuFe	1													
	2-968947-1	A	6		4													
	1-968947-2	A	6	CuSn4	1													
	1-968947-1	A	6		4													
	2-962916-3	E	4	CuFe	2	>1.0 - 2.5 FLR	max. 3.0	E = 3.6 G = 3.8 D_{Dr} = 1.7	A H = 5.3 K = 5.0 D = 3.6	2.5 mm² = 1.88 2.0 mm² = 1.73 1.5 mm² = 1.58	MQC APPLICATOR 2-878560-2	734440-1	3.5	6.0	7.6	26.8	828905 (Ø5.0)	828922-1
	2-962916-2	E	4		1													
	2-962916-1	E	4		4													
	1-962916-3	E	4	CuSn4	2													
	1-962916-2	E	4		1													
	1-962916-1	E	4		4													
	2-962915-3	E	4	CuFe	2	0.5 - 1.0 FLR	max. 2.1	E = 2.6 G = 2.9 D_{Dr} = 1.2	A H = 5.0 K = 4.8 D = 3.3	1.0 mm² = 1.36 0.75 mm² = 1.27 0.5 mm² = 1.18	MQC APPLICATOR 2-878559-2	734438-1	3.0	5.4	7.0	26.8	828904 (Ø5.0)	
	2-962915-2	E	4		1													
	2-962915-1	E	4		4													
	6-962915-6	E	4	CuSn4	7, 2													
	1-962915-3	E	4		2													
	1-962915-2	E	4		1													
	1-962915-1	E	4		4													
	1-965982-3	A	5	CuSn4	2	0.2 - 0.5 FLR	max. 2.1	E = 2.1 G = 2.1 D_{Dr} = 0.8	A H = 4.7 K = 4.5 D = 3.2	0.5 mm² = 1.12 0.35 mm² = 1.05 0.2 mm² = 0.98	MQC APPLICATOR 2-878558-2	539635-1 MATRIZE : 539737-2	2.5	4.9	6.5	26.8	828904 (Ø5.0)	
	1-965982-1	A	5		4													
UNSEALED / ungedichtet	3-968946-1	A	3	CuSn0.20	4	>2.5 - 4.0 FLR	2.7 - 3.7	E = 4.5 G = 4.7 D_{Dr} = 2.3	A H = 5.7 K = 5.9 D = 3.3	4.0 mm² = 2.25	MQC APPLICATOR 2-541534-2	539635-1 MATRIZE : 539723-2	4.3	6.6	8.5	28.5		
	2-968946-2	A	3	CuFe	1													
	2-968946-1	A	3		4													
	1-968946-2	A	3	CuSn4	1													
	1-968946-1	A	3		4													
	2-962843-3	C	1	CuFe	2	>1.0 - 2.5 FLK	2.4 - 3.7	E = 3.6 G = 3.8 D_{Dr} = 1.7	A H = 5.5 K = 5.7 D = 3.2	2.5 mm² = 1.88 2.0 mm² = 1.73 1.5 mm² = 1.58	MQC APPLICATOR 2-878552-2	734417-3	3.6	5.2	8.9	28.6		
	2-962843-2	C	1		1													
	2-962843-1	C	1		4													
	1-962843-3	C	1	CuSn4	2													
	1-962843-2	C	1		1													
	1-962843-1	C	1		4													
	2-962842-3	E	1	CuFe	2	>1.0 - 2.5 FLR	2.1 - 2.9	E = 3.6 G = 3.8 D_{Dr} = 1.7	A H = 4.3 K = 4.5 D = 2.6	2.5 mm² = 1.88 2.0 mm² = 1.73 1.5 mm² = 1.58	MQC APPLICATOR 2-878551-2	734417-2	3.6	5.2	8.2	27.9		
	2-962842-2	F	1		1													
	2-962842-1	E	1		4													
	1-962842-3	E	1	CuSn4	2													
	1-962842-2	E	1		1													
	1-962842-1	E	1		4													
	2-962841-3	F	1	CuFe	2	0.5 - 1.0 FLR	1.4 - 2.1	E = 2.6 G = 2.8 D_{Dr} = 1.1	A H = 3.2 K = 3.4 D = 1.8	1.0 mm² = 1.36 0.75 mm² = 1.27 0.5 mm² = 1.18	MQC APPLICATOR 2-878550-2	734417-1	3.0	4.6	7.0	26.7		
	2-962841-2	F	1		1													
	2-962841-1	F	1		4													
	1-962841-3	F	1	CuSn4	2													
	1-962841-2	F	1		1													
	1-962841-1	F	1		4													
	2-963860-3	B	2	CuFe	2	0.2 - 0.5 FLR	1.3 - 1.6	E = 2.1 G = 2.1 D_{Dr} = 0.8	A H = 2.9 K = 2.9 D = 1.4	0.5 mm² = 1.12 0.35 mm² = 1.05 0.2 mm² = 0.98	MQC APPLICATOR 2-878549-2	734538-1	2.5	3.7	5.8	25.5		
	2-963860-2	B	2		1													
	2-963860-1	B	2		4													
	1-963860-3	B	2	CuSn4	2													
	1-963860-2	B	2		1													
	1-963860-1	B	2		4													

2:1

THIS DRAWING IS A CONTROLLED DOCUMENT.	DWN K.Gerlach 14 JUN1999
DIMENSIONS: mm	CHK M.Bleicher
TOLERANCES UNLESS OTHERWISE SPECIFIED: 0 PLC ±.4 ; 1 PLC ±.4 ; 2 PLC ±.4 ; 3 PLC ±.4 ; 4 PLC ±.4 ; ANGLES ±1.5° ; ±0.2	APVD -
MATERIAL -	PRODUCT SPEC 108-18063
FINISH -	APPLICATION SPEC 114-18051
WEIGHT -	Customer Drawing

TE Connectivity

NAME: PRODUCT GROUP DRAWING FOR TAB 2.8x0.8
Produktgruppenzeichnung fuer Flachstecker 2.8x0.8

SIZE	CAGE CODE	DRAWING NO	RESTRICTED TO
A0	00779	C-1355052	-

SCALE 10:1 SHEET 1 OF 1 REV A17