MICRO SWITCH
a Honeywell Division
FED. MFG. CODE 91929

SWITCH–BASIC

CATALOG LISTING
38HM10

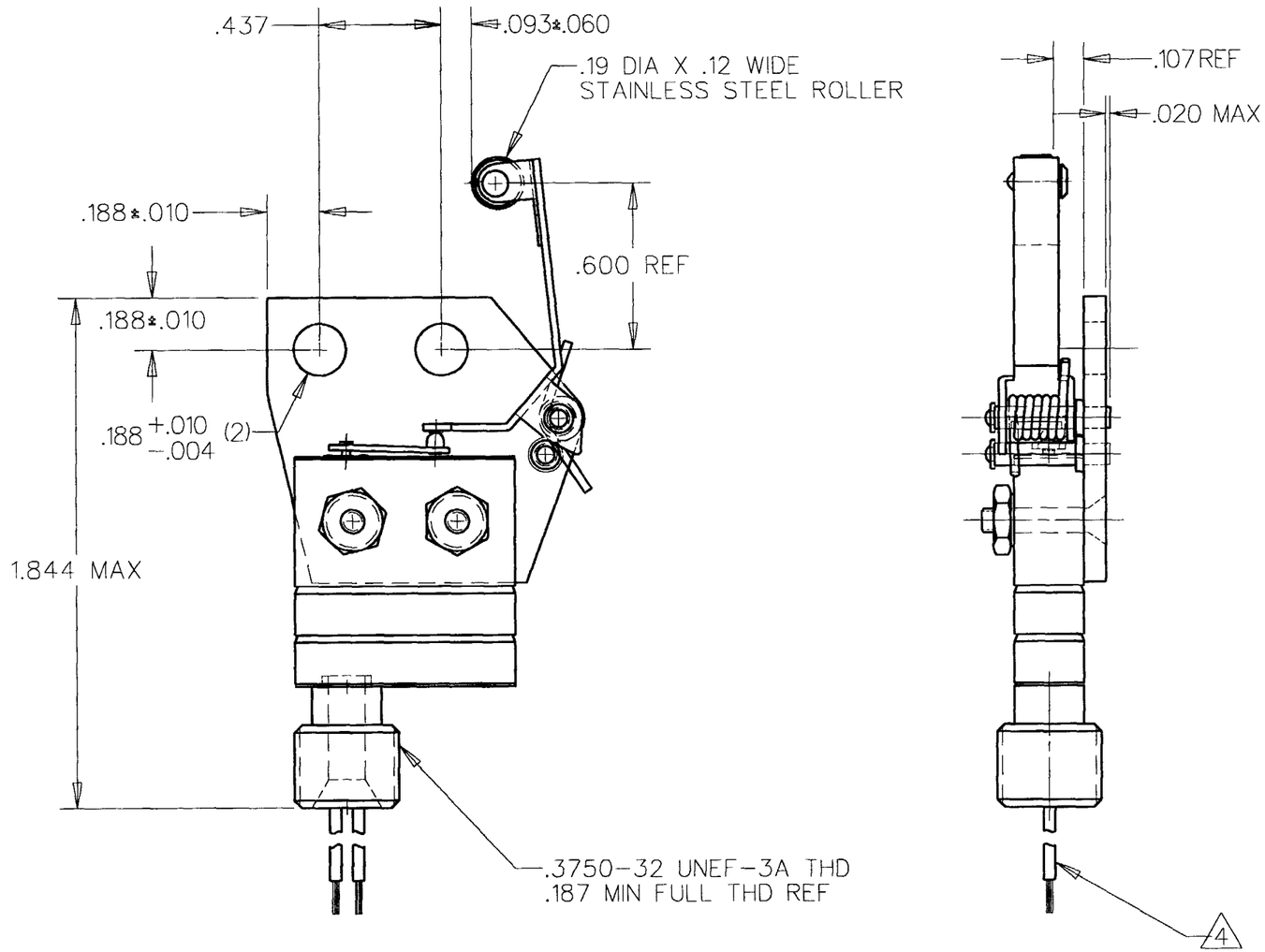

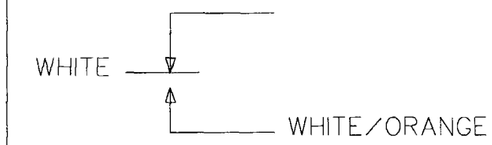

CIRCUIT DIAGRAM

CATALOG LISTING	ISSUE	REPLACES	RELEASE NO.	CHECK	CHECK	CHECK	CHECK	DRAWN
38HM10 PAGE 1 OF 1	M 5		PR–13215		26 MAR 91	MAM	18 MAR 91	TSM

REVISIONS
A C069973 TSM 18 MAR 91
B 202458 CSL 27 FEB 01

RASTER

THIS DRAWING COVERS A PROPRIETARY ITEM AND IS THE PROPERTY OF MICRO SWITCH. A DIVISION OF HONEYWELL. THIS DRAWING IS NOT TO BE COPIED OR USED WITHOUT THE APPROVAL OF MICRO SWITCH

THIRD ANGLE PROJECTION

SCALE 2:1

DO NOT SCALE PRINT

CHARACTERISTICS

OPERATING FORCE — — — — 3 LBS MAX
RELEASE FORCE — — — — — 6 OZ MIN
PRETRAVEL — — — — — — .012 MIN
DIFFERENTIAL TRAVEL — — — .030 MAX
OVERTRAVEL — — — — — — .050 MIN

ELECTRICAL DATA

CONTACT ARRANGEMENT
SPNO

28 VOLTS DC RATING
INDUCTIVE--- SEA LEVEL---1/4 AMP
70,000 FT---1/4 AMP
RESISTIVE--- SEA LEVEL---1 AMP
70,000 FT---1 AMP

UNLESS OTHERWISE SPECIFIED TOLERANCES ARE

ONE PLACE	(.0)	±.030
TWO PLACE	(.00)	±.015
THREE PLACE	(.000)	±.005
ANGLES		±

WEIGHT

NOTES
1 – UNIT INCLUDES 8HM102 BASIC SWITCH
2 – SWITCH HERMETICALLY SEALED PER MIL–S–8805, SYMBOL 5
3 – ALL EXPOSED PARTS ARE CORROSION RESISTANT MATERIALS OR SURFACE TREATED
4 LEADWIRE PER MIL–W–22759/10–20 AND 36 INCHES LONG REF