AVERY DENNISON MARKETING SPECIFICATION

THE SUBJECT MATTER DISCLOSED HEREIN EMBODIES PROPRIETARY INFORMATION WHICH IS THE CONFIDENTIAL PROPERTY OF THE AVERY DENNISON CO. NONE OF WHICH SHALL BE COPIED, REPRODUCED, DISCLOSED TO OTHERS, PUBLISHED OR USED IN WHOLE OR IN PART, FOR ANY PURPOSE OTHER THAN THAT FOR WHICH IT IS BEING MADE AVAILABLE WITHOUT THE EXPRESS ADVANCE WRITTEN PERMISSION OF A DULY AUTHORIZED AGENT OF THE COMPANY. THIS DOCUMENT IS THE PROPERTY OF THE AVERY DENNISON CO. AND IS TO BE RETURNED TO THE COMPANY ON DEMAND.

HISTORY

REV.	DATE	DESCRIPTION
D	09.24.13	UPDATE BALLOON 5;ADDED UNITS
E	09.22.14	ADDED OPER. TEMP, UL LOGO ANDNOTE; CHG DIM 1 TO BE TAKEN FROM THE BOTTOM OF THE HEAD

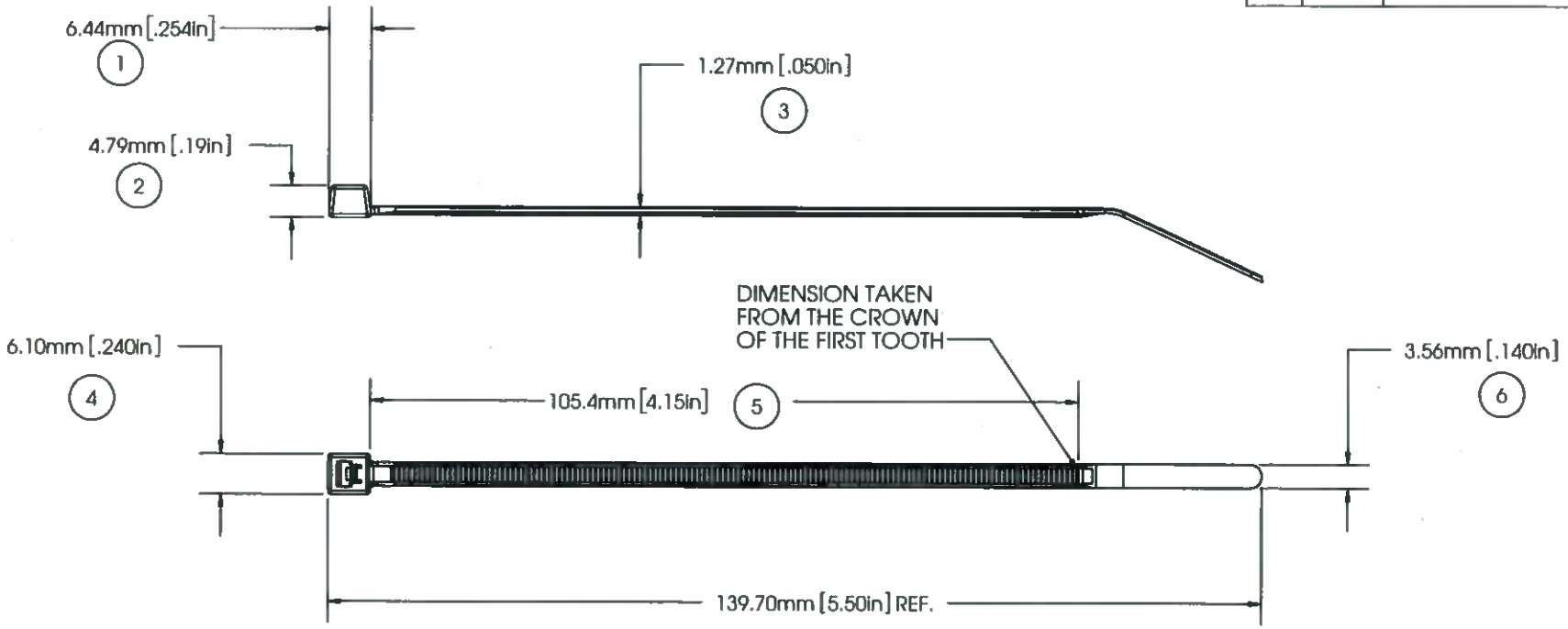

NOTE: THESE CABLE TIES ARE UV RESISTANT AND HAVE A FLAMMABLITY RATING OF V-2

c UL us LISTED
POSITIONING DEVICE
E57800
TYPE 21

MILITARY STANDARD:	MS-3367-5-0
LOOP TENSILE STRENGTH:	40 LBF /180N MIN. PER AS-23190
OPERATING TEMP:	-40°F(-40°C) TO 176°F(80°C)
MIN. INSTALLATION TEMP:	32°F(0°C)
WEIGHT:	0.025 OZ./0.70 GRAMS
BUNDLE DIAMETER:	Ø1.6MM TO Ø31.8MM
TOOL:	12001 - HAND INSTALLATION TOOL 12500 - PNUEM. INSTALLATION TOOL
TOOL TENSION SETTING:	3-5
PACKAGING:	100/BAG, 5000/CASE

APPROVALS: ENG. APPR. 9/22/14 Q.A. APPR. 9/23/14

SPECIFIED TOLERANCES ARE:
.XX ± .03 IN. .X ± .7 MM
.XXX ± .010 IN. .XX ± .25 MM
ANGULAR: ± 2°

MATERIAL: NYLON 6/6, WEATHER RESISTANT

COLOR: BLACK

AVERY DENNISON
FASTENER DIVISION
FITCHBURG, MA 01420 U.S.A.
TEL. 1-800-225-5913
FAX. 978-353-8157

DESCRIPTION: 5.5" CABLE TIE, INTERMED.

STOCK NO. 08384-0

REV. E

5 4 3 2 1