THIS DRAWING IS UNPUBLISHED. RELEASED FOR PUBLICATION -.- .
© COPYRIGHT - By - ALL RIGHTS RESERVED.

LOC	DIST
AJ	00

REVISIONS

P	LTR	DESCRIPTION	DATE	DWN	APVD
	S	REVISED PER ECO-14-016559	03NOV2014	G.G	M.Y

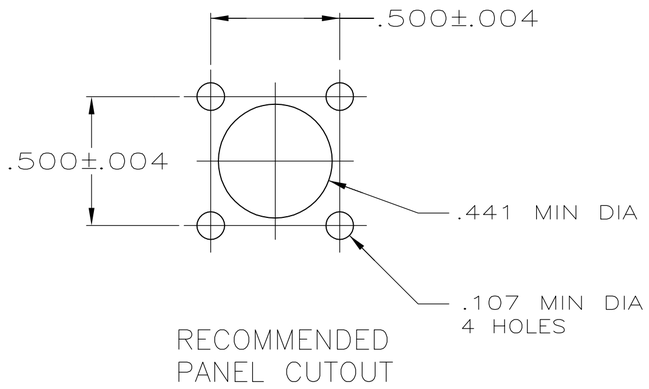

RECOMMENDED PANEL CUTOUT

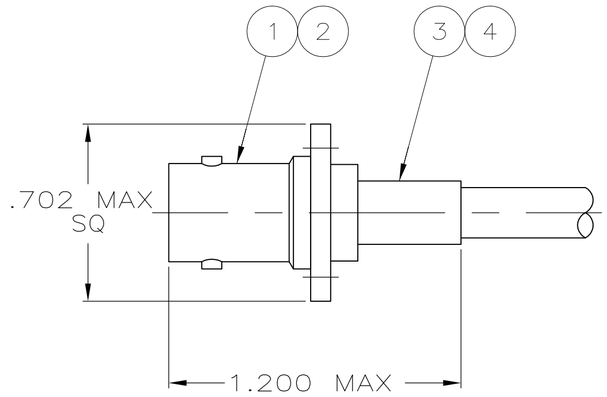

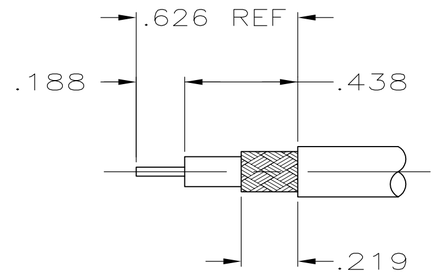

RECOMMENDED STRIP LENGTH

△1 SEE I.S. 1914-4

△2 OBSOLETE PARTS: OBSOLETE CIS STREAMLINING PER D.RENAUD/D.SINISI

225397

	FOR USE WITH CABLE:	CRIMPING TOOL	WEIGHT	(4) BUSHING QTY=1	(3) FERRULE QTY=1	(2) CONTACT QTY=1	(1) JACK ASSY, PANEL QTY=1	PART NO
SUPERSEDED	RG-58/U,58A/U,58B/U & 58C/U	69478-1	.391 OZ	———	9-50427-1	1-331369-6	1-331791-2	9-225397-0
SUPERSEDED	RD-188/U, 316/U	220009-1	-	21427-2	9-329049-0	1-331368-2	1-331791-4	1-225397-4
	RG-174/U & 188/U	220009-1	-	21427-2	9-328666-0	1-331368-2	1-331791-5	1-225397-3
OBSOLETE	AMPHENOL 21-597	69477-2	.023565 LB	———	9-329461-0	1-331368-2	1-331791-4	1-225397-0
OBSOLETE	RG-179/U & 187/U	220009-1	.023601 LB	21427-2	9-328666-0	1-331368-4	1-331791-4	225397-8
	RG0174/U, 188/U, 316/U	220009-1	.023583 LB	21427-2	9-328666-0	1-331368-2	1-331791-4	225397-7
OBSOLETE	RG-55/U,55A/U,55B/U & 223/U	69478-1	.023869 LB	———	9-329099-0	1-331369-6	1-331791-2	225397-3
△2 SUPERSEDED	RG-59B/U & 62B/U	69477-1	.024369 LB	———	9-50428-0	2-331368-3	1-331791-3	225397-2
	RG-58/U,58A/U,58B/U & 58C/U	69478-1	.391 OZ	———	9-50427-1	1-331369-6	1-331791-2	225397-1

THIS DRAWING IS A CONTROLLED DOCUMENT.

DIMENSIONS: INCHES

TOLERANCES UNLESS OTHERWISE SPECIFIED:
0 PLC ± -
1 PLC ± -
2 PLC ± -
3 PLC ± .016
4 PLC ± -
ANGLES ± -

MATERIAL -

FINISH -

DWN J. L. GROFT 4-25-90
CHK R. E. RUTH 5/25/90
APVD -
PRODUCT SPEC —
APPLICATION SPEC —
WEIGHT —

TE Connectivity

NAME JACK, PANEL, DUAL CRIMP, BNC

SIZE	CAGE CODE	DRAWING NO	RESTRICTED TO
A2	00779	C-225397	—

CUSTOMER DRAWING | SCALE NTS | SHEET 1 OF 1 | REV S

1471-9 (3/11)