THIS COPY IS PROVIDED ON A RESTRICTED BASIS AND IS NOT TO BE USED IN ANY WAY DETRIMENTAL TO THE INTERESTS OF PANDUIT CORP.

PANDUIT P/N	WEIGHT
CFFP4**	.20 LB/10 PCS (108.8 g/10 PCS)

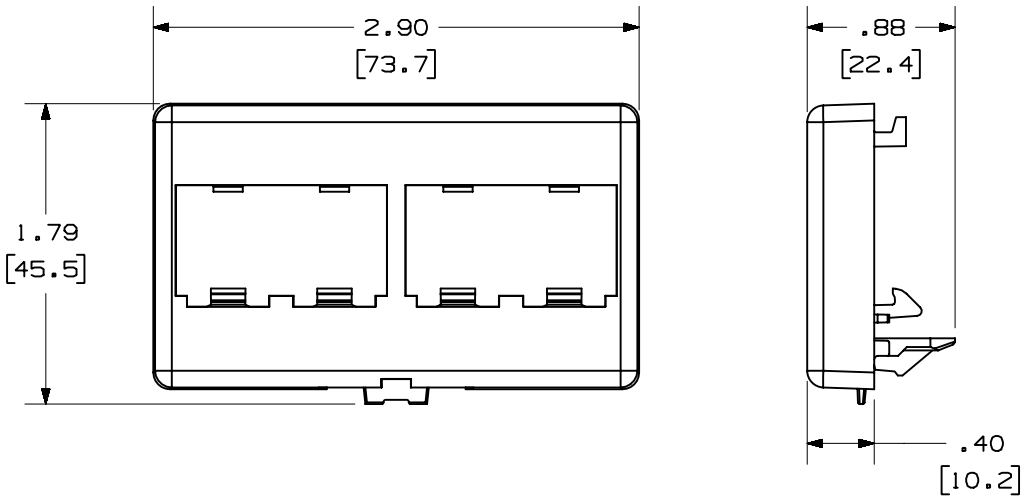

NOTES:
1. SEE CURRENT CATALOG FOR ADDITIONAL PART NUMBER SUFFIXES TO INDICATE COLOR AND OR PACKAGE QUANTITY.
2. SEE CATALOG FOR COMPLETE LIST OF PARTS APPLICABLE FOR USE WITH THIS PART.
3. DIMENSIONS IN PARENTHESES ARE IN METRIC.
4. FACEPLATE ACCEPTS 4 MINI-COM MODULES.
5. FACEPLATE SNAPS INTO STANDARD FURNITURE OPENING. (1.375 X 2.710)

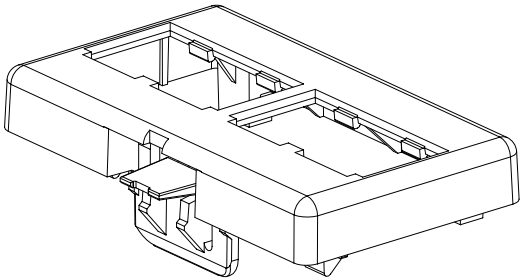

REV	DATE	BY	CHK	DESCRIPTION	ECN	CHK	CUST	SUP
1	8-27-01	JsP		B. ADDED LOCATING TABS. A. MODEL CHANGE: ADDED SNAP STOP FEATURES.	00806-02			
R	8-11-99	JsP	MECA	RELEASED TO PRODUCTION.	00806-02	MECA		

CAD FILENAME/LAYERS: M00806ZZ_DC_05A.PRT

PANDUIT CORP. TINLEY PARK, ILLINOIS

4 POSITION MINI-COM FURNITURE FACEPLATE (CFFP4**) CUSTOMER DRAWING

UNLESS OTHERWISE SPECIFIED, DIMENSIONAL TOLERANCES ARE:
(.X) ± (.XXX) ±.010(.3)
(.XX) ±.03(.8) ANGLES ±

UNLESS OTHERWISE SPECIFIED, ALL DIMENSIONS ARE GIVEN IN INCHES, THIRD ANGLE PROJECTION.

DRAWN BY: JsP
DATE: 8-11-99
CHECKED BY: MECA
MAT'L: ABS
SCALE: NONE
DRAWING NO.: 00806-02
DWG SIZE: A