THIS DRAWING IS UNPUBLISHED. RELEASED FOR PUBLICATION -,- .
© COPYRIGHT - By - ALL RIGHTS RESERVED.

LOC	DIST
F1	25

REVISIONS

P	LTR	DESCRIPTION	DATE	DWN	APVD
	J3	REVISED PER ECO-12-004153	01MAR12	KH	DR

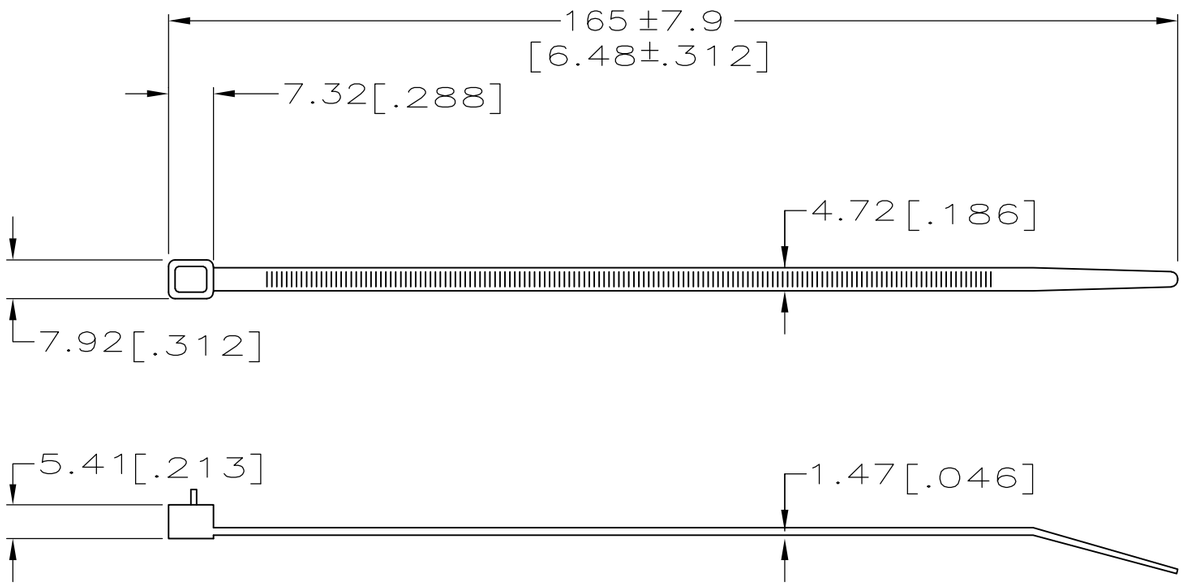

1 PACKAGED IN A HEAT SEALED 3 MIL POLYBAG.

2 MAXIMUM BUNDLE DIAMETER: 34.93[1.38].

3 MINIMUM TENSILE STRENGTH: 22.68 KG[50 LBS].

4 OBSOLETE PARTS

	QUANTITY/BAG	COLOR	PART NUMBER
OBSOLETE	1000	PURPLE	4-608692-0
OBSOLETE	100	PURPLE	3-608692-0
OBSOLETE	1000	BLACK	2-608692-0
4 OBSOLETE	100	NATURAL	2-608692-9
	1000	BLACK	1-608692-0
OBSOLETE	100	NATURAL	1-608692-9

THIS DRAWING IS A CONTROLLED DOCUMENT.

DIMENSIONS: mm [INCHES]

TOLERANCES UNLESS OTHERWISE SPECIFIED:

0 PLC	± -
1 PLC	± -
2 PLC	± -
3 PLC	± 0.99[.039]
4 PLC	± -
ANGLES	± -

MATERIAL: NYLON 6/6

FINISH: -

DWN DL DRUMMOND 16 MAR 98
CHK DL DRUMMOND 16 MAR 98
APVD EJ HRYN 18 MAR 98
PRODUCT SPEC —
APPLICATION SPEC —
WEIGHT —

TE Connectivity

NAME: CABLE TIE, RELEASABLE, 6-1/2 INCHES —

SIZE	CAGE CODE	DRAWING NO	RESTRICTED TO
A3	00779	C-608692	—

CUSTOMER DRAWING | SCALE NONE | SHEET 1 OF 1 | REV J3