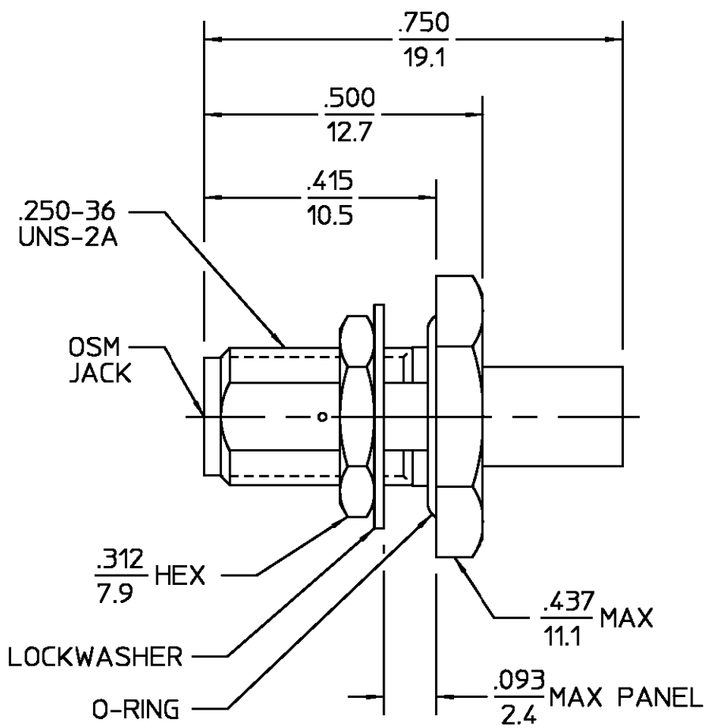


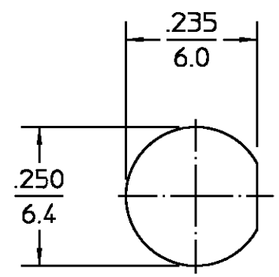


RECOMMENDED
MOUNTING HOLE

| DESIGNED FOR USE WITH .141 DIA S/R CABLE | |
|---|---|
| CABLE ENTRY DIAMETER MINIMUM | |
| HOUSING | .143 |
| CONTACT | .036 |

REVISIONS

| REV | DESCRIPTION | DATE | APPROVED |
|---|---|---|---|
| $01_2$ | REDRAWN IN CAD PER ECN 98-0001 | PATLAN 2/17/98 | |

| ELECTRICAL | MECHANICAL | ENVIRONMENTAL |
|---|---|---|
| Nominal Impedance (Ohms) 50 | Interface Dimensions MIL-STD-348A, Fig. 310.2 | Temperature Rating -65°C to +165°C |
| Frequency Range (GHz) DC to 18 | Recommended Mating Torque N/A | Vibration MIL-STD-202, Method 204, Condition G |
| Volt Rating (VRMS MAX) @ Sea Level 500 | Mating Characteristics: Insertion (MAX Lbs) 2.0 | Shock MIL-STD-202, Method 213, Condition I |
| VSWR 1.05+0.01f(GHz) | Withdrawal (MIN Oz) 1.0 | Thermal Shock MIL-STD-202, Method 107, Condition B, Except High Temp shall be +115°C |
| Insertion Loss (dB MAX) $03\sqrt{f(GHz)}$ | Force to Engage and Disengage (In-Lbs MAX) 2.0 | Moisture Resistance MIL-STD-202, Method 106 |
| RF Leakage (dB MIN) -[90-f(GHz)] | Center Contact Captivation Axial (Lbs) 60 | Corrosion - MIL-STD-202, Method 101, Condition B, 5% salt spray |
| Corona, 70,000 Ft (VRMS MIN) 375 | Radial (In-Oz) N/A | |
| Dielectric Withstanding Voltage (VRMS MIN) @ Sea Level 1500 | Cable Retention Axial Force (Lbs) 60 MIN | .XXX = in |
| Contact Resistance (Milliohms MAX) Center Contact 3.0 | Torque (In-Oz) 55 MIN | XX.X = mm (REF) |
| Outer Contact 2.0 | Weight (Oz) .12 | |
| Cable to Housing 0.5 | | |
| RF High Potential @ Sea Level (VRMS MIN @ 5 MHz) 1000 | | |
| I.R.(Megohms MIN) 5,000 | | |

| COMPONENT | MATERIAL | FINISH |
|---|---|---|
| HOUSING MOUNTING NUT LOCKWASHER | STAINLESS STEEL PER ASTM-A484 AND ASTM-A582, TYPE 303 | GOLD PLATE PER MIL-G-45204 |
| DIELECTRIC | PTFE FLUOROCARBON PER ASTM-D-1457 | N/A |
| CENTER CONTACT | BERYLLIUM COPPER PER ASTM-B-196 OR ASTM-B-197, ALLOY C17300, CONDITION H | GOLD PLATE PER MIL-G-45204 |
| O-RING | SILICONE RUBBER PER ZZ-R-765 | N/A |

UNLESS OTHERWISE SPECIFIED DIMENSIONS ARE IN INCHES
TOLERANCE ON

| FRAC. | DEC. | ANGLES |
|---|---|---|
| ± 1/64 | ±.005 | ± 1° |

| | | DATE |
|---|---|---|
| DRAWN BY | GB | 11/3/82 |
| CHECKED BY | RMF | 1/20/83 |
| APP'D BY | RMF | 1/20/83 |

These drawings and specifications are the property of M/A COM Interconnect Division and shall not be reproduced or copied or used in whole or in part as the basis for the manufacture or sale of item(s) without written permission.

USE ASS'Y PROCEDURE

NO. A.P. 408-04947 (20-267)

AMP M/A-COM
*M/A-COM*
*a Division of AMP Incorporated*
140 Fourth Avenue
Waltham, MA 02154-7577

TITLE OSM BULKHEAD FEEDTHRU CABLE JACK-DIRECT SOLDER ATTACHMENT

| SIZE | CODE IDENT NO. | | REV |
|---|---|---|---|
| B | 26805 | 2004-7541-00 | $01_2$ |
| SCALE 4:1 | | | SHEET 1 OF 1 |

CUSTOMER DRAWING

AMP PART # 1051001-1
SHEET 1 OF 1 REV A