SIGN	DATE	DESCRIPTION	APPROVER
1	8/07'06	Added VDE standard	Liang ren song
2	1/27'07	Soldering temperature changed from 245°C to 250°C	Tony
3	6/19'08	Operating temperature is changed	Marvin
4	6/19'08	With flange is changed	Marvin
5	10/27'09	The material is changed from Brass to Copper	Jacke
6	04/07'11	The design is changed	Chen Bo
7	04/28'12	Flange Nut is changed	Guoxue
8	12/04'12	Update the drawing	Chen Bo

THIS IS CAD DRAWING, DO NOT REVISE MANUALLY!!!

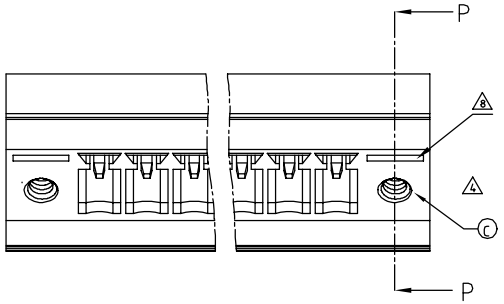

Material:

- 5 Item ⓐ Male contact pin: Copper Tin plated
- Item ⓑ Terminal(housing): Thermoplastic (UL94V-0)
- Item ⓒ With flange nut: Brass ,M2.5

1	Electrical:	cULus /VDE
	Voltage rating:	300V/300V
	Current rating:	8A/10A
	Withstanding Voltage:	1.6 KV/2.5KV
3	Operating temperature:	-40°C to +115°C
8 2	Soldering temperature:	260°C±5°C/5 Sec
	Safety Approval:	cULus VDE
	Critical dimension: C	

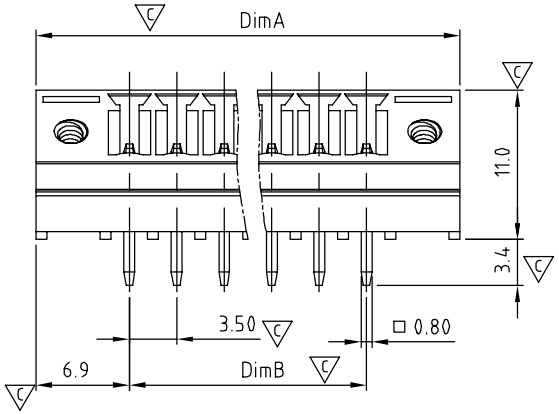

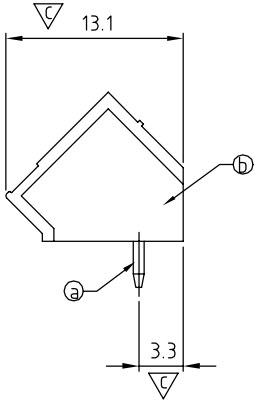

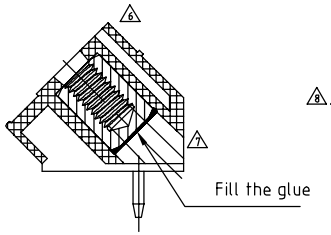

SECTION P-P

VK xx 1 2 x 0 xxxx G

- No. OF POLES: 02: 2 POLES ⋮ 24: 24 POLES
- COLOR:
  - 0 Black (RAL9005)
  - 2 Red (RAL3001/D)
  - 3 Orange(RAL2011/P)
  - 4 Yellow(RAL1018/A)
  - 5 Green(RAL6018/T)
  - 6 Blue (RAL5015/A)
  - 8 Grey(RAL7035/D)
- 0000: "@" Logo
- 000A: "ANYTEK" Logo
- Any special item by customer requst. please contact sales department.
- G RoHS compliant (lead<4%) In copper Alloy

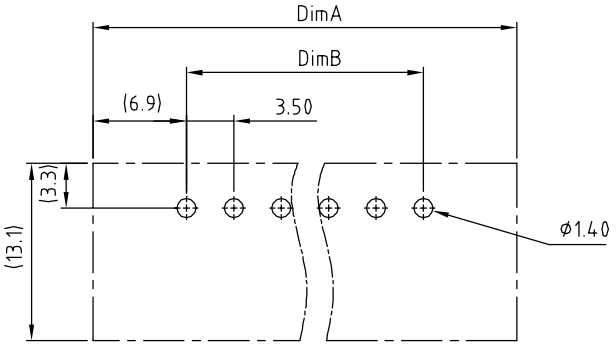

P.C.B LAYOUT

DimA=(N-1)×3.5+13.8
DimB=(N-1)×3.5

N=NUMBER OF POLES

POLES	TOL
2p-6p	+0.10/-0.10
7p-12p	+0.15/-0.15
13p-18p	+0.20/-0.20
19p-24p	+0.30/-0.30

ANYTEK

CUSTOMER COPY

ALL RIGHTS RESERVED. REPRODUCTION OR ISSUE TO THIRD PARTIES IN ANY FORM WHATEVER IS NOT PERMITTED WITHOUT WRITTEN AUTHORITY FROM THE PROPRIETOR. PROPERTY OF ANYTEK TECHNOLOGY CO., LTD

TITLE	VK - 3.5mm Series (with flange)				
PART NO.	VKxx12x0xxxxG			DWG NO.	8VK0002
APPROVED	CHECKED	DESIGNED	DRAWN	CUST NO.	
		Chen Bo 12/04`12	Chen Bo 12/04`12	UNIT: mm	SCALE: NONE
				SHEET: 01/01	REV.: J

Tolerance	
X.	±0.50
X.X	±0.30
X.XX	±0.10
X°	±1°