THIS DRAWING IS UNPUBLISHED. RELEASED FOR PUBLICATION ,19 .
© COPYRIGHT 19 BY AMP INCORPORATED. ALL RIGHTS RESERVED.

LOC	DIST
CF	39

REVISIONS

P	LTR	DESCRIPTION	DATE	DWN	APVD
	A	ADD -4 THRU -22 0B20-0820-97	6-30-97	TS	CA
	B	REV PER 0U30-0177-00	17APR00	TS	CA
	C	REV PER 0S20-0591-05	14APR05	TS	CA

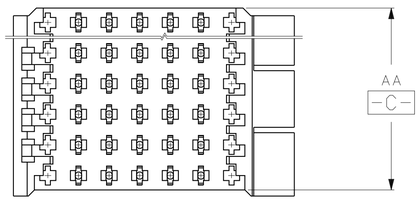

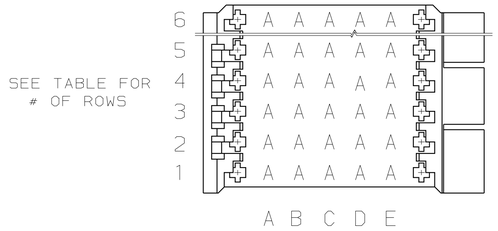

PIN PATTERN

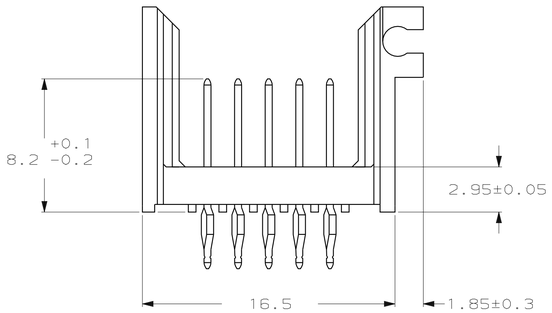

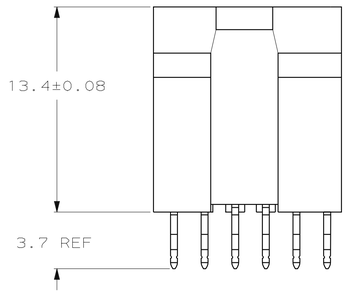

1. HOUSING MATERIAL: POLYESTER PBT,MOLDING COMPOUND, FLM RTD, 20% GLASS FILLED, COLOR:BLACK.
2. CONTACT MATERIAL: PHOSPHOR BRONZE PER UNS C51100, TEMPER H04
3. CONTACT FINISH:
   MATING SURFACE- 0.0008 MIN GOLD OVER 0.0013 MIN NICKEL.
   ON LEADS- 0.0005 MIN TIN-LEAD OVER 0.0013 MIN NICKEL.

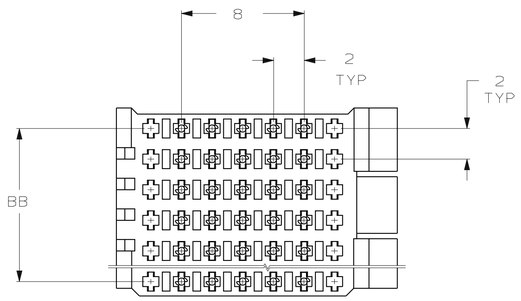

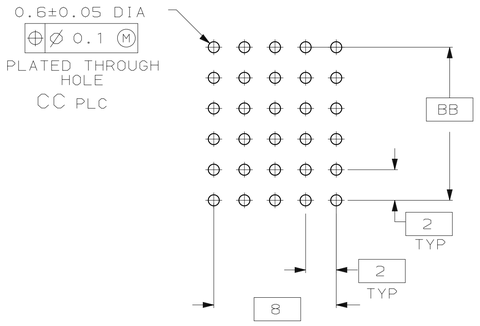

RECOMMENDED PCB
PATTERN

CC	BB	AA	ROWS	PART NO
125	48	49.88	25	2-636120-2
120	46	47.88	24	2-636120-1
115	44	45.88	23	2-636120-0
110	42	43.88	22	1-636120-9
105	40	41.88	21	1-636120-8
100	38	39.88	20	1-636120-7
95	36	37.88	19	1-636120-6
90	34	35.88	18	1-636120-5
85	32	33.88	17	1-636120-4
80	30	31.88	16	1-636120-3
75	28	29.88	15	1-636120-2
70	26	27.88	14	1-636120-1
65	24	25.88	13	1-636120-0
60	22	23.88	12	636120-9
55	20	21.88	11	636120-8
50	18	19.88	10	636120-7
45	16	17.88	9	636120-6
40	14	15.88	8	636120-5
35	12	13.88	7	636120-4
30	10	11.88	6	636120-3
25	8	9.88	5	636120-2
20	6	7.88	4	636120-1

THIS DRAWING IS A CONTROLLED DOCUMENT.

DIMENSIONS: mm

TOLERANCES UNLESS OTHERWISE SPECIFIED:
0 PLC ±0.1
1 PLC ±0.1
2 PLC ±0.1
3 PLC ±0.1
4 PLC ±0.1
ANGLES ±-

MATERIAL 1 2
FINISH 3

DWN T.SMITH 6-30-97
CHK C.ADAMS 6-30-97
APVD T.SMITH 6-30-97
PRODUCT SPEC —
APPLICATION SPEC —
WEIGHT —

AMP Incorporated
Harrisburg, PA 17105-3608

NAME HEADER, 2mm HM

SIZE	CAGE CODE	DRAWING NO	RESTRICTED TO
A1	00779	C-636120	—

CUSTOMER DRAWING | SCALE 5:1 | SHEET 1 OF 1 | REV C

AMP 4805 REV 27JUN96