Alle Rechte vorbehalten/ *All rights reserved*

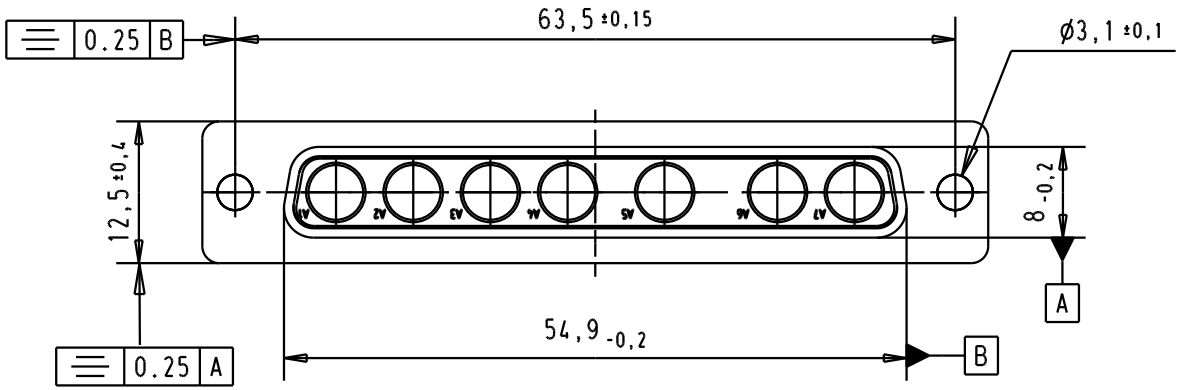

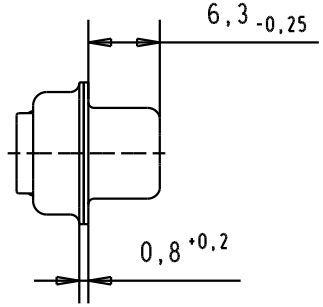

PCB Layout, component side

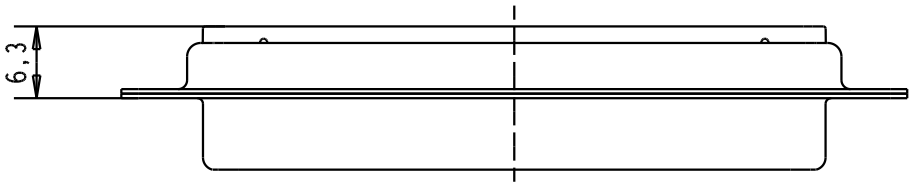

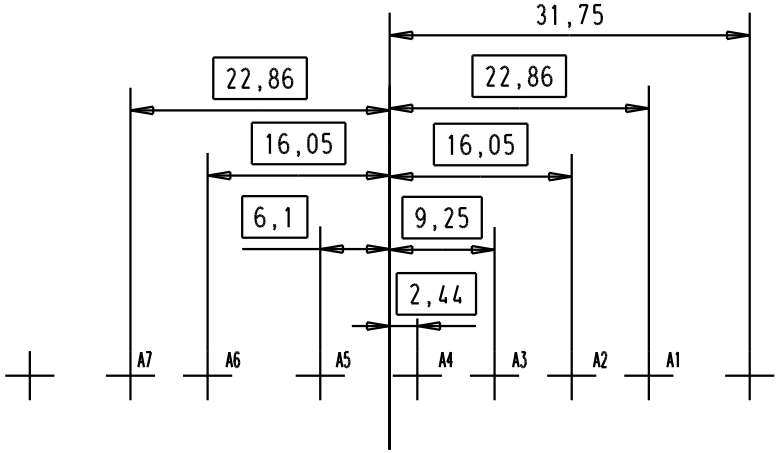

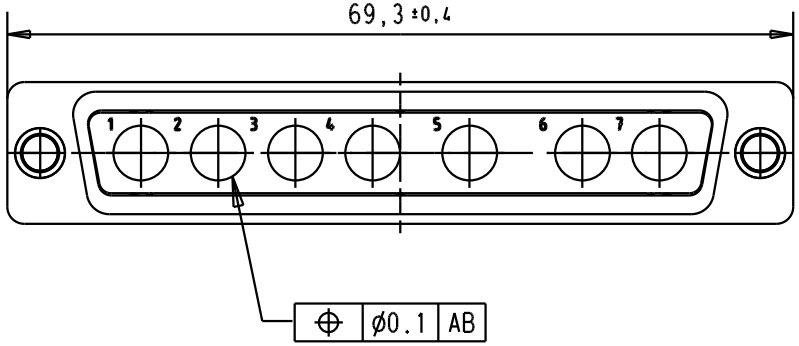

				Dat.	Name
			Detail.	10/10/05	JMDR
			Insp.		
			Stand.		
33234	10/10/05	JMDR			
Mod.	Dat.	Name			

All Dim. in mm
Orig. Size DIN A 4

HARTING EURL
F-95972 Paris

D-Sub, female,
7W7 without contacts,
tin plated shell with holes

Maßstab/ *Scale* 1,5:1

TB 09 69 400 0077

Sub.

Blatt/ *Page* 1/1