THIS DRAWING IS UNPUBLISHED. VERTRAULICHE UNVEROEFFENTLICHTE ZEICHNUNG
© COPYRIGHT 2014 Tyco Electronics AMP GmbH
RELEASED FOR PUBLICATION 2014
FREI FUER VEROEFFENTLICHUNG
ALL RIGHTS RESERVED. ALLE RECHTE VORBEHALTEN.

MATED WITH: PASSEND ZU:

PROJEKT NR.: PRJ-14-000000805

REVISIONS
ABAENDERUNGEN

P	LTR	DESCRIPTION BESCHREIBUNG	DATE	DWN	APVD
	A1	NEW DRAWING	24 JUN 2014	YR	CS

1 MATERIAL: ITEM NO. 1: HOUSING - PA
ITEM NO. 2: CONTACT BODY - PA
ITEM NO. 3: CONTACT - CuZn (brass)
CONTACT FINISH - Au (gold)

2 ALL DIMENSIONS ARE FOR NOMINAL REFERENCE ONLY UNLESS OTHERWISE STATED

3 MEASUREMENT REFERENCE ONLY

4 PACKAGING: 1 PIECE IN A BAG

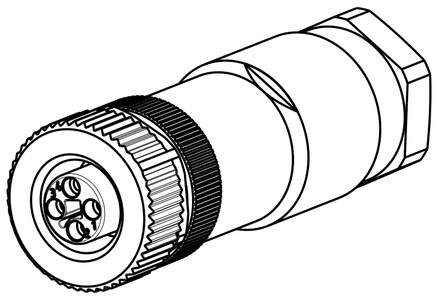

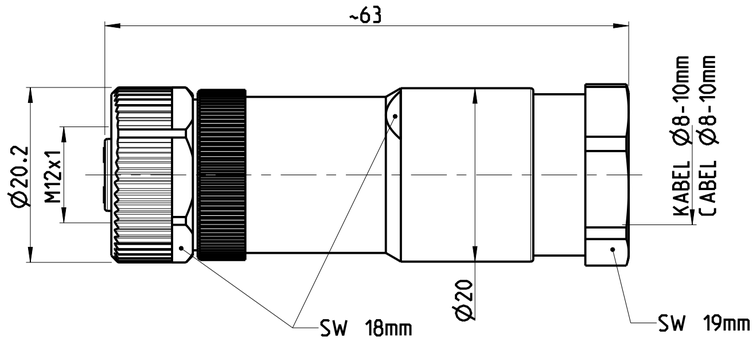

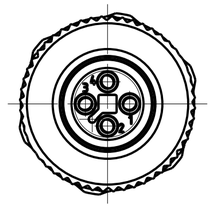

PIN ARRANGEMENT
T-CODING (SCALE 4:1)

0-2120948-1

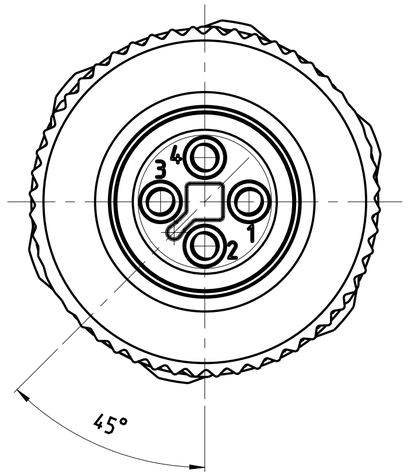

TECHNICAL DATA	0-2120948-1
RATED VOLTAGE	60V
RATED IMPULSE VOLTAGE	1500V
POLLUTION DEGREE	3
OVERVOLTAGE CATEGORY	III
MATERIAL GROUP	III
RATED CURRENT	12A
VOLUME RESISTIVITY	≤ 3mΩ
DEGREE OF PROTECTION	IP67
UPPER TEMPERATURE	+85 °C
LOWER TEMPERATURE	-40 °C

SIZE ISO 14405 Ⓔ

8-10	16 / 1.50	1	4	0-2120948-1
CABLE FEED-THROUGH mm	WIRES AWG / mm²	MATERIAL	NUMBER OF POLES	TE-PART-NO.

DIESE ZEICHNUNG IST EIN KONTROLLIERTES DOKUMENT.
BEMASSUNGEN UND TOLERANZEN GEMAESS GPS (ISO STANDARDS).

THIS DRAWING IS A CONTROLLED DOCUMENT.
DIMENSIONING AND TOLERANCING PER GPS (ISO STANDARDS).

DIMENSIONS: MASSEINHEITEN: mm

TOLERANCES UNLESS OTHERWISE SPECIFIED: ALLGEMEINTOLERANZEN
0 PLC ±-
1 PLC ±-
2 PLC ±-
3 PLC ±-
4 PLC ±-
ANGLES/WINKEL ±-
FINISH/OBERFLAECHE/FARBE -

MATERIAL - -

DWN YASHKUMAR 24 JUN 2014
CHK M.STRELOW 24 JUN 2014
APVD C.SCHRETTLINGER 24 JUN 2014

PRODUCT SPEC PRODUKTSPEZ. -
APPLICATION SPEC VERARBEITUNGSSPEZ. -
WEIGHT GEWICHT -

TE Connectivity

NAME M12 RECEPTACLE CONNECTOR, STRAIGHT, FIELD INSTALLABLE, POWER, T-CODED
-

SIZE	CAGE CODE	DRAWING NO ZEICHNUNGS-NR.	RESTRICTED TO NUR FUER
A2	00779	C-2120948	-

Customer Drawing /KUNDENZEICHNUNG | SCALE MASSSTAB 2:1 | SHEET BLATT 1 OF VON 1 | REV A1

1471-9 (3/13)