THIS DRAWING IS UNPUBLISHED. RELEASED FOR PUBLICATION - ,- .
© COPYRIGHT - By - ALL RIGHTS RESERVED.

REVISIONS					
P	LTR	DESCRIPTION	DATE	DWN	APVD
	R3	REVISED PER ECO-17-007038	16MAY17	RS	KR

1 PARTS COMPLY WITH AMP SOLDERABILITY SPECIFICATION 109-11-3.

2 CIRCUIT IDENTIFICATION CHARACTERS ARE ADJACENT TO THE INDICATED CAVITIES, BUT LOCATION AND ORIENTATION MAY DIFFER FROM PRINT.

3 CONTACT IS PLATED OVERALL WITH 0.00127 [.000050] NICKEL,THEN 0.00076 [.000030] GOLD OVER CONTACT LENGTH INDICATED AND MATTE TIN LEAD ON SOLDERTAIL END.

4 DIMENSIONS IN BRACKETS ARE IN INCHES.

5 CONTACT IS PLATED OVERALL WITH 0.00127 [.000050] NICKEL,THEN 0.00076 [.000030] GOLD OVER CONTACT LENGTH INDICATED AND MATTE TIN ON SOLDERTAIL END.

6 SUPERSEDED BY 641972-3

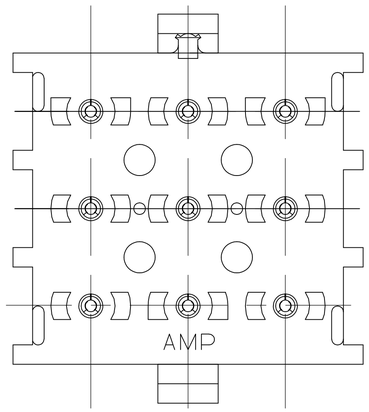

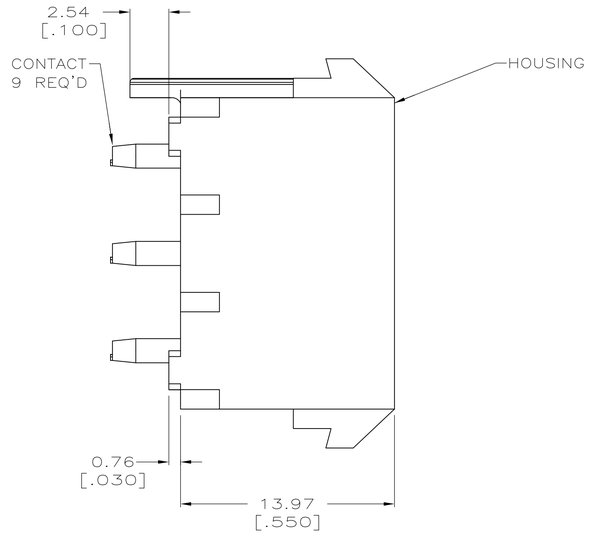

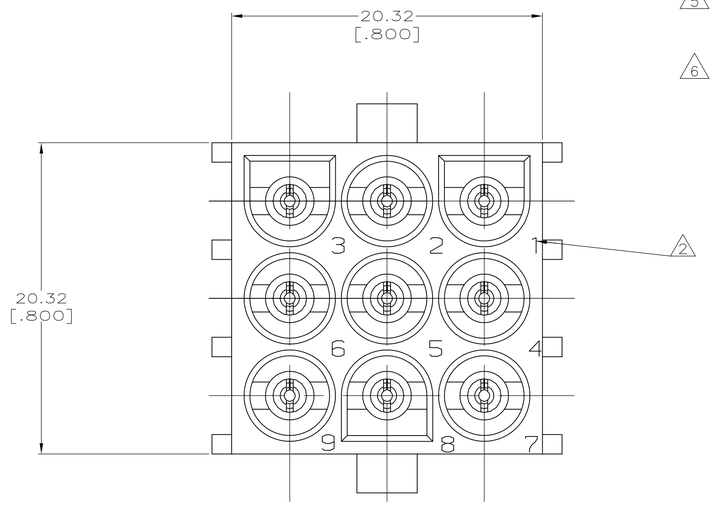

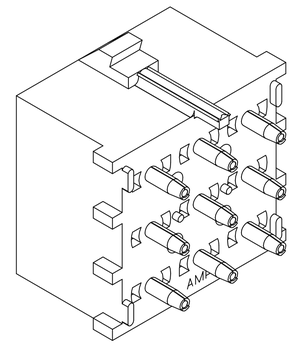

3-DIMENSIONAL MODEL
NTS

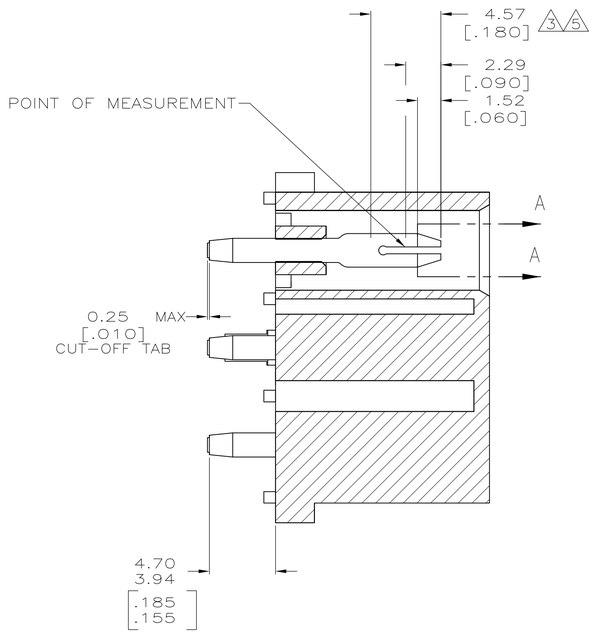

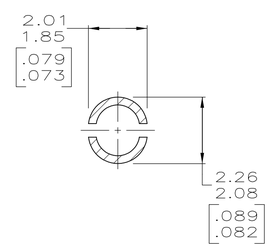

SECTION A-A
SCALE 10:1

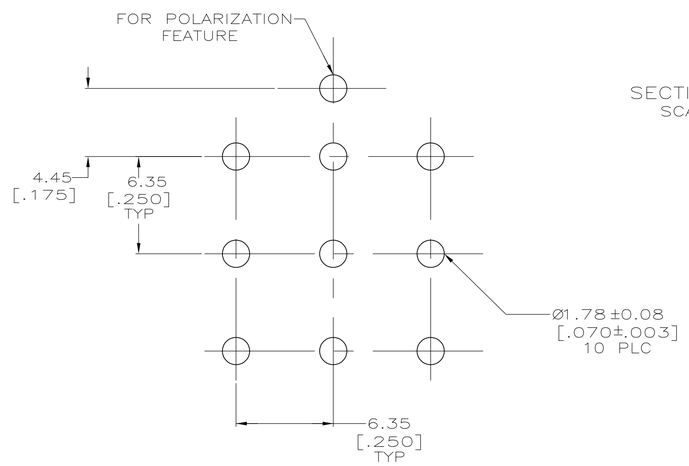

RECOMMENDED MOUNTING HOLE PATTERN
FOR 1.57 [.062] THICK P.C. BOARD

	MATERIAL (PIN)	FINISH (PIN)	MATERIAL (HOUSING)	COLOR (HOUSING)	PART NO
	PH BRZ	5 GOLD PLATED	NYLON, UL94V-0	WHITE	641972-3
	PH BRZ	TIN PLATED	NYLON, UL94V-0	BLACK	1-641972-1
6	PH BRZ	3 GOLD PLATED	NYLON, UL94V-0	WHITE	641972-2
	PH BRZ	TIN PLATED	NYLON, UL94V-0	WHITE	641972-1

THIS DRAWING IS A CONTROLLED DOCUMENT.

DIMENSIONS: mm [INCHES]

TOLERANCES UNLESS OTHERWISE SPECIFIED:
0 PLC ± -
1 PLC ± -
2 PLC ± -
3 PLC ± 0.13 [.005]
4 PLC ± -
ANGLES ± -

MATERIAL: SEE TABLE
FINISH: SEE TABLE

DWN B. LEWIS 8-29-97
CHK R. SWING 8-29-97
APVD M. TRULL 8-29-97
PRODUCT SPEC —
APPLICATION SPEC —
WEIGHT 0.000000
CUSTOMER DRAWING

TE Connectivity

NAME: PIN HEADER ASSEMBLY, POLARIZED,9 CIRCUIT,UNIVERSAL MATE-N-LOK TM

SIZE	CAGE CODE	DRAWING NO	RESTRICTED TO
A1	00779	C-641972	—

SCALE 5:1 SHEET 1 OF 1 REV R3