THIS DRAWING IS UNPUBLISHED. RELEASED FOR PUBLICATION 2006
© COPYRIGHT 2006 ALL RIGHTS RESERVED.

LOC	DIST
A1	-

REVISIONS

F	LTR	DESCRIPTION	DATE	DWN	APVD
	B8	REVISED PER ECR-17-014013	14FEB2018	SRG	MKO

PN 0-1

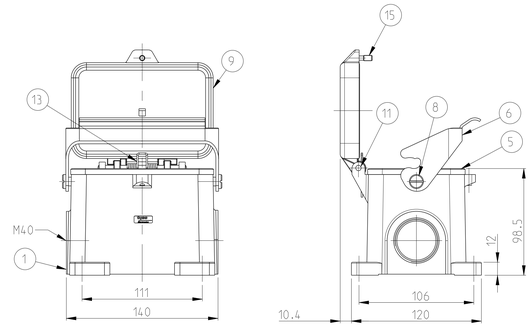

PN 0-2

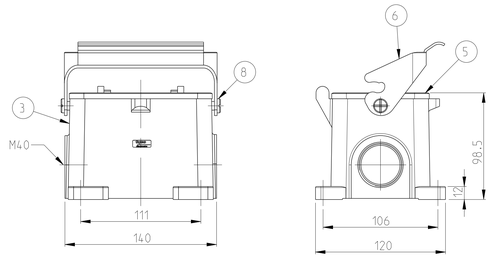

PN 0-3

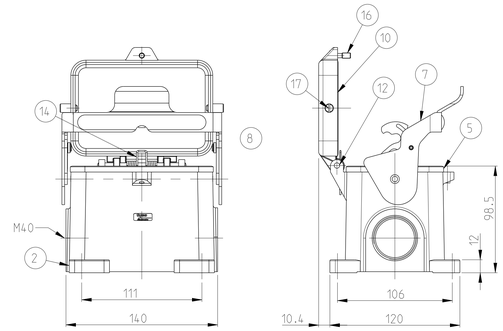

NOTES

1 PARTS SHALL BE BLANK.SMOOTH.FREE OF BURS AND ALL OTHER FOREIGN MATERIAL. NO CAST-UNEVENESS ALLOWED

2 PACKING: 2 PIECES MAX. IN A BOX

3 VARNISHING INSIDE HOUSING NOT REQUIRED

PN 0-4

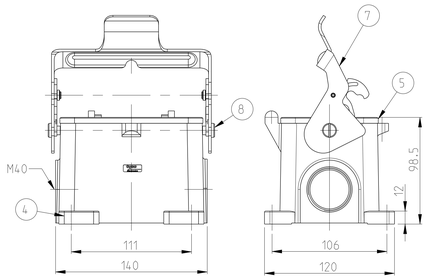

PN 0-5

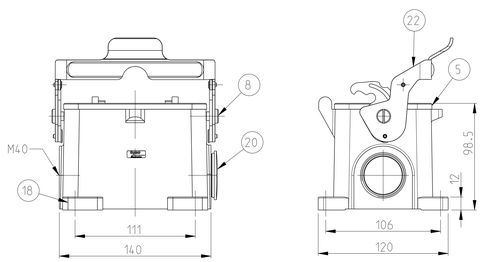

PN 0-6

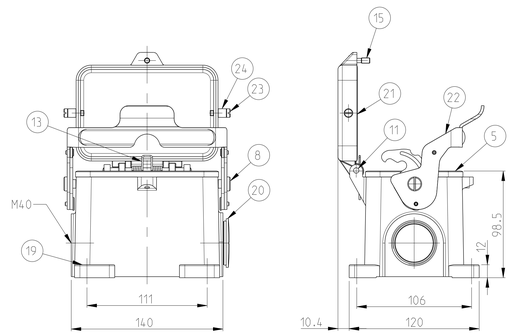

PN 0-1

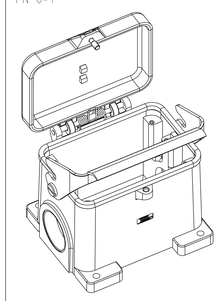

PN 0-2

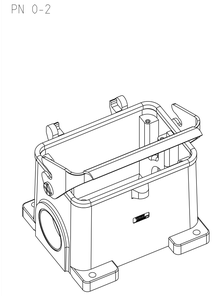

PN 0-3

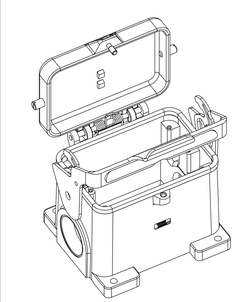

PN 0-6 & 0-8

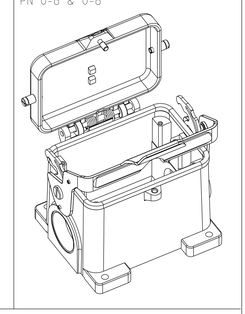

PN 0-5

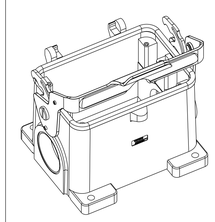

PN 0-7

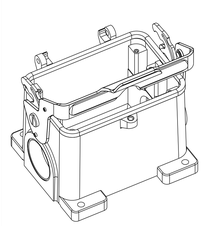

PN 0-4

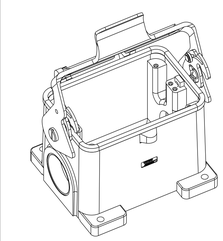

PN 0-7

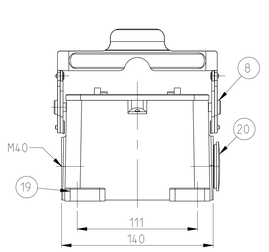

PN 0-8

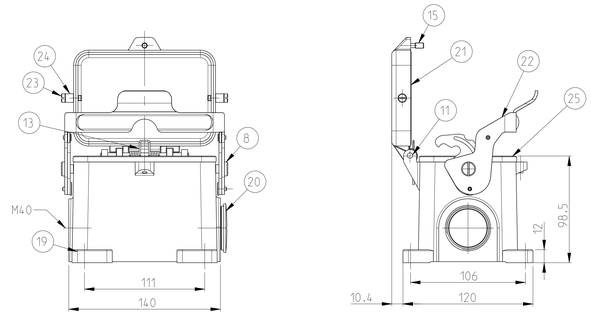

0-8	0-7	0-6	0-5	0-4	0-2	0-3	0-1	DESCRIPTION	MATERIAL	SURFACE	COLOR	ITEM	NOTES
OBSOLETE					OBSOLETE								
								PROFILE SEAL	VITON			25	
2		2						SLIDE SPOOL HB.48	STAINLESS STEEL	BLANK		24	
2		2						CLIP BOLT	STAINLESS STEEL	BLANK		23	M5
	1 (R)	1	1 (R)					SIDE CLIP - STÄUBLI	STAINLESS STEEL	BLANK		22	
	(R)	1	(R)					COVER	ALUMINIUM		GREY	21	
		1	1					BLANKING PIECE WITH SEAL	STEEL		BLUE	20	M40
		1						SURFACE MOUNTED HOUSING SIDE ENTRY	ALUMINIUM		GREY	19	NEUTRAL
			1					SURFACE MOUNTED HOUSING SIDE ENTRY	ALUMINIUM		GREY	18	NEUTRAL
	(R)		(R)				2	CLIP BOLT	STAINLESS STEEL	BLANK		17	
							1	CYLINDER SCREW	STAINLESS STEEL	BLANK		16	M5x16
		1						CYLINDER SCREW	STEEL	ZINC PLATED	BLUE	15	M5x16
							1	LEG SPRING	STAINLESS STEEL	BLANK		14	
		1						LEG SPRING	STEEL	ZINC PLATED	BLUE	13	
							1	RIVET PIN	STAINLESS STEEL	BLANK		12	Ø5x80
		1						RIVET PIN	STEEL	ZINC PLATED	BLUE	11	Ø5x80
							1	COVER	ALUMINIUM	ALUMINIUMOXIDE	BLACK	10	
								COVER	ALUMINIUM		GREY	9	
2	2	2	2	2	2	2	2	SLOTTED PAN HEAD SCREW	STAINLESS STEEL	BLANK		8	M6x8
				1		1		SIDE CLIP	STAINLESS STEEL	BLANK		7	
						1		SIDE CLIP	STEEL	ZINC PLATED	BLUE	6	
		1	1	1	1	1	1	PROFILE SEAL	NEOPRENE		BLACK	5	
				1				SURFACE MOUNTED HOUSING SIDE ENTRY	ALUMINIUM	ALUMINIUMOXIDE	BLACK	4	
					1			SURFACE MOUNTED HOUSING SIDE ENTRY	ALUMINIUM		GREY	3	
						1		SURFACE MOUNTED HOUSING SIDE ENTRY	ALUMINIUM	ALUMINIUMOXIDE	BLACK	2	
								SURFACE MOUNTED HOUSING SIDE ENTRY	ALUMINIUM		GREY	1	
0-8	0-7	0-6	0-5	0-4	0-2	0-3	0-1	DESCRIPTION	MATERIAL	SURFACE	COLOR	ITEM	NOTES

~~HB.48.SGD-LB.2.M40.Z~~
~~HB-K.48.SGD-LB.2.M40.Z~~
~~HB.48.SG-LB.2.M40.Z~~
~~HB.48.SG-LB.2.M40.Z~~
HB-K.48.SG-LB.2.M40.Z+BS
HB.48.SGD-LB.2.M40.Z+BS
~~HB.48.SG-LB.2.M40.Z+BS-V~~
~~HB.48.SGD-LB.2.M40.Z+BS-V~~

THIS DRAWING IS A CONTROLLED DOCUMENT.

DIMENSIONS: mm

TOLERANCES UNLESS OTHERWISE SPECIFIED:
0 PLC ±
1 PLC ± 0.5
2 PLC ± 0.25
3 PLC ± 0.12
4 PLC ± 0.05
ANGLES ±

MATERIAL 4

FINISH 5

DWN G.SCHNEIDER 26.JAN.2009
CHK T.SCHNURPFEIL 26.JAN.2009
APVD -
PRODUCT SPEC -
APPLICATION SPEC -
WEIGHT -

TE Connectivity

NAME SURFACE MOUNTED HOUSING SIDE ENTRY HB.48.SGD-LB.2.M40.Z+BS

SIZE A0 | CAGE CODE | DRAWING NO C-1106481 | RESTRICTED TO

CUSTOMER DRAWING | SCALE 1:2 | SHEET 1 OF 1 | REV B8